MIAMI-DADE COUNTY, FLORIDA
METRO-DADE FLAGLER BUILDING

BUILDING CODE COMPLIANCE OFFICE
METRO-DADE FLAGLER BUILDING
140 WEST FLAGLER STREET, SUITE 1603
MIAMI, FLORIDA 33130-1563
(305) 375-2901 FAX (305) 375-2908

CONTRACTOR LICENSING SECTION
(305) 375-2527 FAX (305) 375-2558

CONTRACTOR ENFORCEMENT SECTION
(305) 375-2966 FAX (305) 375-2908

PRODUCT CONTROL DIVISION
(305) 375-2902 FAX (305) 372-6339

PRODUCT CONTROL NOTICE OF ACCEPTANCE

Delcoa Industries,Inc.
1950 N.W. 18 Street
Pompano Beach FL 33069

Your application for Product Approval of:
DSL Panel System
under Chapter 8 of the Code of Miami-Dade County governing the use of Alternate Materials and Types of Construction, and completely described herein, has been recommended for acceptance by the Miami-Dade County Building Code Compliance Office (BCCO) under the conditions specified herein.

This approval shall not be valid after the expiration date stated below. BCCO reserves the right to secure this product or material at anytime from a jobsite or manufacturer's plant for quality control testing.
If this product or material fails to perform in the approved manner, BCCO may revoke, modify, or suspend the use of such product or material immediately. BCCO reserves the right to revoke this approval, if it is determined BCCO that this product or material fails to meet the requirements of the South Florida Building Code.

The expense of such testing will be incurred by the manufacturer.

Acceptance No.: 00-0118.01 **(Revises No.: 99-1005.07)**

Expires: 11/25/2002

Raul Rodriguez
Chief Product Control Division

THIS IS THE COVERSHEET, SEE ADDITIONAL PAGES FOR SPECIFIC AND GENERAL CONDITIONS

BUILDING CODE & PRODUCT REVIEW COMMITTEE

This application for Product Approval has been reviewed by the BCCO and approved by the Building Code and Product Review Committee to be used in Dade County, Florida under the conditions set forth above.

Francisco J. Quintana, R.A.
Director
Miami-Dade County
Building Code Compliance Office

Approved: 03/03/2000

Internet mail address: postmaster@buildingcodeonline.com **Homepage: http://www.buildingcodeonline.com**

PRODUCT CONTROL NOTICE OF ACCEPTANCE
ROOFING SYSTEM APPROVAL

Applicant:
Delcoa Industries, Inc.
1950 NW 18th Street
Pompano Beach, FL 33069

Product Control No.:**00-0118.01**

Approval Date: **March 03, 2000**

Expiration Date: **November 25, 2002**

Category: Prepared Roofing
Sub-Category: Panels
Type: Non-Structural
Sub-Type: Metal

System Trade Names:

Delcoa
Snap Lock DSL Panel

TRADE NAMES OF PRODUCTS MANUFACTURED OR LABELED BY APPLICANT

Product	Dimensions	Test Specifications	Product Description
Snap Lock DSL Panel	l = various w = 13" through 21" h = 1" min. 24 gage		Corrosion resistant, galvalume or galvanized, preformed, standing seam, coated, prefinished, metal panels.
Trim Pieces	l = varies w = varies min. 24 ga.		Standard flashing and trim pieces, corrosion resistant galvalume or galvanized.
Panel Clips	min. 0.024" thick x 10' long x 1-3/8" wide x 1" high		Corrosion resistant, formed, plated continuous steel clips for metal panel installation

Frank Zuloaga, RRC
Roofing Product Control Examiner

TRADE NAMES OF PRODUCTS MANUFACTURED BY OTHERS

Product	Dimensions	Product Description	Manufacturer
#30 Felt	N/A	Saturated organic felt to be used as a nailed underlayment.	generic
#43 Coated Base Sheet	N/A	Saturated and coated organic base sheet for single or double ply underlayment.	generic
Fire Barrier Board ("Dens Deck")	min. ¼" thick	Fire barrier for Class 'A' fire rating.	Georgia-Pacific with current PCA
Fire Barrier ("Roctex")	min. 450 grams/m^2	Fire barrier for Class 'A' fire rating.	Partek Insulations, Inc.
Fasteners (Panel Clips)	min. #10 coarse thread wood screw.	Corrosion resistant, pancake head, self-drilling, self-threading screws	generic
Sealant	N/A	Sealant for use at foam closure strip.	generic

EVIDENCE SUBMITTED

Test Agency	Test Identifier	Test Name/Report	Date
The Glidden Co.	Technical Literature	Salt Spray ASTM B 117	January 1993
The Glidden Co.	Technical Literature	Accelerated Weathering ASTM G 23	January 1993
Celotex Corporation Testing Services	520303	PA 100	July 1999
Hurricane Test Laboratory, Inc.	0182-0420-99 0182-0718-99	PA 125	September 1999
Celotex Corporation Testing Services	520303b	PA 100	October 1999

Frank Zuloaga, RRC
Roofing Product Control Examiner

Systems

SYSTEM A-1: DSL-13 through DSL-21 Snap Lock Panels

Deck Type: Wood, Non-insulated

Deck Description: New Construction
$^{19}/_{32}$" or greater plywood or wood plank.

Slope Range: 2":12" or greater

Maximum Uplift Pressure: The maximum allowable uplift pressure for the 13" through 21" wide panels shall be -93 psf.

Deck Attachment: In accordance with chapter 29 of the SFBC, but in no case shall it be less than 8d annular ring shank nails spaced 6" o.c. In reroofing, where the deck is less than 19/32" thick (Minimum 15/32") The above attachment method must be in addition to existing attachment.

Underlayment: Minimum underlayment shall be an ASTM D 226 Type II installed with a minimum 4" side-lap and 6" end-laps. Underlayment shall be fastened with corrosion resistant tin-caps and 12 gauge 1 ¼" annular ring-shank nails, spaced 6" o.c. at all laps and two staggered rows 12" o.c. in the field of the roll.

Valleys: Valley construction shall be in compliance with Miami-Dade County Roofing Application Standard RAS 133 and with the current published installation instructions and details in Delcoa Installation Manual.

Fire Barrier Board: For class A or B fire rating, install minimum ¼" thick Georgia Pacific "Dens Deck" (with curent NOA) or minimum 4mm thick of Roctex Oy Ab Insulation, Inc. (with current NOA) "Rocroof" or 5/8" water resistant type X gypsum sheathing with treated core and facer, over the deck prior to installing the underlayment in compliance with Miami Dade County Protocol RAS 133.

Metal Panels and Accessories: Install the "Snap Lock DSL-13" through "Snap Lock DSL-21" and accessories in compliance with the current published installation instructions and details in Delcoa Installation Manual. Flashings, penetrations, valley construction and other details shall be constructed in compliance with Miami-Dade County Roofing Application Standard RAS 133. Panels shall be installed with approved continuous clips, attached to substrate with corrosion resistant #10 screws of sufficient length to penetrate through sheathing 3/16" at a spacing not to exceed 16" o.c.

Frank Zuloaga, RRC
Roofing Product Control Examiner

SYSTEMS - CONTINUED

SYSTEM A-1 (Continued)

Comments:

1. Panels shall be roll formed in continuous lengths from eave to ridge not exceeding 45 feet in compliance with Miami-Dade County Roofing Application Standard RAS 133.

2. Anchor continuous clips as needed to meet or exceed design pressures determined in compliance with Chapter 23 of the South Florida Building Code (See System Limitation #2) but fastener spacing not to exceed 16" o.c.

SYSTEM LIMITATIONS

1. Panels shall be roll formed in continuous lengths from eave to ridge. Maximum lengths shall be as described in Miami-Dade County Roofing Application Protocol RAS 133.

2. All panels shall be permanently labeled with the manufacturer's name or logo, city, state and the following statement: "Miami-Dade County Product Control Approved.

Frank Zuloaga, RRC
Roofing Product Control Examiner

Delcoa Industries, Inc.
1950 NW 18th Street
Pompano Beach. FL 33069

ACCEPTANCE NO: 00-0118.01
APPROVED : March 03, 2000
EXPIRES : November 25, 2002

NOTICE OF ACCEPTANCE STANDARD CONDITIONS

1 Renewal of this Acceptance (approval) shall be considered after a renewal application has been filed and the original submitted documentation, including test supporting data, engineering documents, are no older than eight (8) years.

2 Any and all approved products shall be permanently labeled with the manufacturer's name, city, state, and the following statement: "Miami-Dade County Product Control Approved", or as specifically stated in the specific conditions of this Acceptance.

3 Renewals of Acceptance will not be considered if:
a) There has been a change in the South Florida Building Code affecting the evaluation of this product and the product is not in compliance with the code changes;
b) The product is no longer the same product (identical) as the one originally approved;
c) If the Acceptance holder has not complied with all the requirements of this acceptance, including the correct installation of the product;
d) The engineer who originally prepared, signed and sealed the required documentation initially submitted, is no longer practicing the engineering profession.

4 Any revision or change in the materials, use, and/or manufacture of the product or process shall automatically be cause for termination of this Acceptance, unless prior written approval has been requested (through the filing of a revision application with appropriate fee) and granted by this office.

5 Any of the following shall also be grounds for removal of this Acceptance:
a) Unsatisfactory performance of this product or process;
b) Misuse of this Acceptance as an endorsement of any product, for sales, advertising or any other purposes.

6 The Notice of Acceptance number preceded by the words Miami-Dade County, Florida, and followed by the expiration date may be displayed in advertising literature. If any portion of the Notice of Acceptance is displayed, then it shall be done in its entirety.

7 A copy of this Acceptance as well as approved drawings and other documents, where it applies, shall be provided to the user by the manufacturer or its distributors and shall be available for inspection at the job site at all times. The copies need not be resealed by the engineer.

8 Failure to comply with any section of this Acceptance shall be cause for termination and removal of Acceptance.

9 This Acceptance contains pages 1 through 7.

END OF THIS ACCEPTANCE

Frank Zuloaga, RRC
Roofing Product Control Examiner

PROFILE DRAWINGS

STIFFENING RIBS ARE OPTIONAL

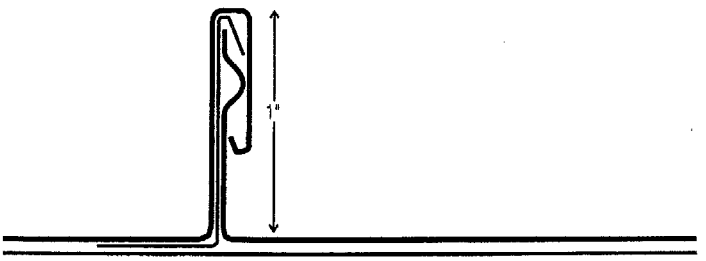

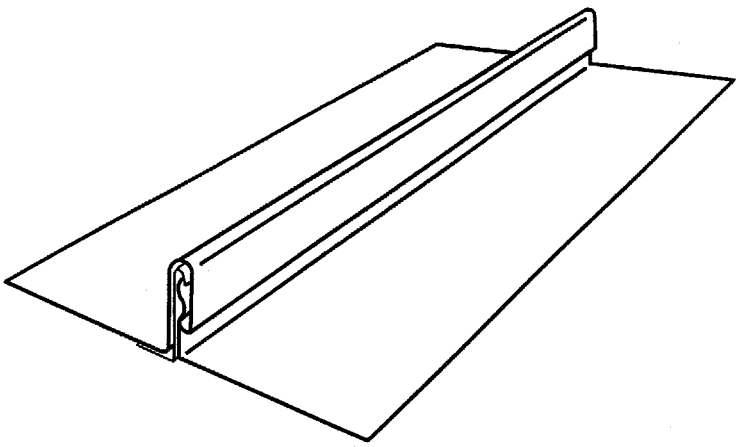

DELCOA DSL-13 THROUGH DSL-21 SNAP LOCK

Frank Zuloaga, RRC
Roofing Product Control Examiner