MIAMI-DADE

MIAMI-DADE COUNTY, FLORIDA
METRO-DADE FLAGLER BUILDING

BUILDING CODE COMPLIANCE OFFICE
METRO-DADE FLAGLER BUILDING
140 WEST FLAGLER STREET, SUITE 1603
MIAMI, FLORIDA 33130-1563
(305) 375-2901 FAX (305) 375-2908

CONTRACTOR LICENSING SECTION
(305) 375-2527 FAX (305) 375-2558

CONTRACTOR ENFORCEMENT DIVISION
(305) 375-2966 FAX (305) 375-2908

PRODUCT CONTROL DIVISION
(305) 375-2902 FAX (305) 372-6339

PRODUCT CONTROL NOTICE OF ACCEPTANCE

All American Supply Company
12900 SW 122 Avenue
Miami ,FL 33186

Your application for Notice of Acceptance (NOA) of:
Component Approval-Outswing 1/2" I.G.(w\middle decorative) lite Wood Door Slab.
under Chapter 8 of the Code of Miami-Dade County governing the use of Alternate Materials and Types of Construction, and completely described herein, has been recommended for acceptance by the Miami-Dade County Building Code Compliance Office (BCCO) under the conditions specified herein.

This NOA shall not be valid after the expiration date stated below. BCCO reserves the right to secure this product or material at any time from a jobsite or manufacturer's plant for quality control testing. If this product or material fails to perform in the approved manner, BCCO may revoke, modify, or suspend the use of such product or material immediately. BCCO reserves the right to revoke this approval, if it is determined by BCCO that this product or material fails to meet the requirements of the South Florida Building Code.

The expense of such testing will be incurred by the manufacturer.

ACCEPTANCE NO.: 00-0118.07
EXPIRES: 02/20/2003

Raul Rodriguez
Chief Product Control Division

THIS IS THE COVERSHEET, SEE ADDITIONAL PAGES FOR SPECIFIC AND GENERAL CONDITIONS
BUILDING CODE & PRODUCT REVIEW COMMITTEE

This application for Product Approval has been reviewed by the BCCO and approved by the Building Code and Product Review Committee to be used in Miami-Dade County, Florida under the conditions set forth above.

Francisco J. Quintana, R.A.
Director
Miami-Dade County
Building Code Compliance Office

APPROVED: 08/10/2000

All American Supply Company

ACCEPTANCE No. : 00-0118.07

APPROVED : AUG 1 0 2000

EXPIRES : February 20, 2003

NOTICE OF ACCEPTANCE: SPECIFIC CONDITIONS

1. SCOPE

1.1 This **revises & renews** the Notice of Acceptance **96-1126.18**, which was issued on February 20, 1997. It approves a **component** consisting of a door slab, as described in Section 2 of this Notice of Acceptance, designed to comply with the South Florida Building Code (SFBC), 1994 Edition for Miami-Dade County, for the locations where the pressure requirements, as determined by SFBC Chapter 23, do not exceed the Design Pressure Rating values indicated in the approved drawings.

2. PRODUCT DESCRIPTION

2.1 The **Model Rim (French\Full lite), Model #SVC36 (6-Panel), Model #340DX (2-Panel), Model #340S(2-Panel), Model #360 (2-Panel), Model #380 (2-Panel\ 2-lites) Outswing ½" Insulated (w\Decorative) lite Wood Door Slab** component shall be constructed in strict compliance with the following documents: Drawing No. **2000-01**, dated 28 June, 2000, sheets 1 through 6 of 6, prepared by manufacturer, bearing the Miami-Dade County Product Control Approval stamp with the Notice of Acceptance number and approval date by the Miami-Dade County Product Control Division. These documents shall hereinafter be referred to as the approved drawings.

3. LIMITATIONS

3.1 This component is approved as equal alternate to the Series 5001 Outswing Single lite wood French Door, per NWWDA I. S. 6-91, to be used, interchangeably only, in outswing door systems with approvals under the auspices of FLBMDA's (FBMA) system: 96-0045(a).

3.2 Single door units shall include all components described in the active leaf of system approval.

3.3 This unit shall be limited to the same Design Pressure as the original system: +48.3 psf; -58.5 psf.

4. INSTALLATION

4.1 The wood out-swinging door slab component shall be installed in strict compliance with the approved drawings.

4.2 Hurricane protection system (shutters): Installation of this product **will require** a hurricane protection system.

5. LABELING

5.1 Each door system shall bear a permanent label with the manufacturer's name or logo, city, state and following statement: "Miami-Dade County Product Control Approved". It shall be located in a visible place inside the frame jamb.

5.2 The door slab itself shall also bear a permanent label, at the door inside edge, issued by FBMA (FLBMDA) with the manufacturer's name or logo, city and state.

6. BUILDING PERMIT REQUIREMENTS

6.1 Application for building permit shall be accompanied by copies of the following:

- **6.1.1** This Notice of Acceptance.
- **6.1.2** Door system's Notice of Acceptance.
- **6.1.3** Duplicate copies of the approved drawings, as identified in Section 2 of this Notice of Acceptance, clearly marked to show the components selected for the proposed installation.
- **6.1.4** Any other documents required by the Building Official or the South Florida Building Code (SFBC) in order to properly evaluate the installation of this system.

Ishaq I. Chanda

Ishaq I. Chanda, P.E., Product Control Examiner
Product Control Division

All American Supply Company

ACCEPTANCE No. : 00-0118.07

APPROVED : AUG 1 0 2000

EXPIRES : **February 20, 2003**

NOTICE OF ACCEPTANCE: STANDARD CONDITIONS

1 Renewal of this Acceptance (approval) shall be considered after a renewal application has been filed and the original submitted documents, including test-supporting data, engineering documents, are no older than eight (8) years.

2. Any and all approved products shall be permanently labeled with the manufacturer's name, city, state, and the following statement: "Miami-Dade County Product Control Approval", or as specifically stated in the specific conditions of this Acceptance.

3. Renewals of Acceptance will not be considered if:
   a. There has been a change in the South Florida Building Code affecting the evaluation of this product and the product is not in compliance with the code changes.
   b. The product is no longer the same product (identical) as the one originally approved.
   c. If the Acceptance holder has not complied with all the requirements of this acceptance, including the correct installation of the product.
   d. The engineer who originally prepared, signed and sealed the required documentation initially submitted, is no longer practicing the engineering profession.

4. Any revision or change in the materials, use, and/or manufacture of the product or process shall automatically be cause for termination of this Acceptance, unless prior written approval has been requested (through the filing of a revision application with appropriate fee) and granted by this office.

5. Any of the following shall also be grounds for removal of this Acceptance:
   a. Unsatisfactory performance of this product or process.
   b. Misuse of this Acceptance as an endorsement of any product, for sales, advertising or any other purposes.

6. The Notice of Acceptance number preceded by the words Miami-Dade County, Florida, and followed by the expiration date may be displayed in advertising literature. If any portion of the Notice of Acceptance is displayed, then it shall be done in its entirety.

7. A copy of this Acceptance as well as approved drawings and other documents, where it applies, shall be provided to the user by the manufacturer or its distributors and shall be available for inspection at the job site at all time. The engineer need not reseal the copies.

8. Failure to comply with any section of this Acceptance shall be cause for termination and removal of Acceptance.

9. This Notice of Acceptance consists of pages 1, 2 and this last page 3.

END OF THIS ACCEPTANCE

Ishaq I. Chanda

Ishaq I. Chanda, P.E., Product Control Examiner
Product Control Division

Product Type And Series:

Model Rim or French Door — Single Full Light

Configuration:

Single Slab
Dimensions: 1.77" x 36" x96"

Daylight Opening:

Dimensions: 24" x 67.50" rectangle

Corner Construction:

Top Rail: 1.77" x 24.5" x 6.527"
Mortise and Tenon
.31" thick x 2.36" wide x 2.95" high

Bottom Rail: 1.77" x 24.5" x 9.488"
Mortise and Tenon
.31" thick x 2.36" wide x 5.11" high

Lock Rail: N/A

Intermediate Rail: N/A

Stiles: 1.77" x 5.5" x 96"

Infill Panels: None

Mullions: None

detail A

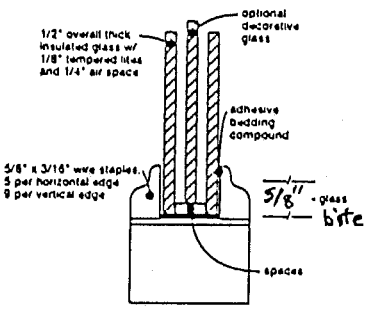

Door Crosscut

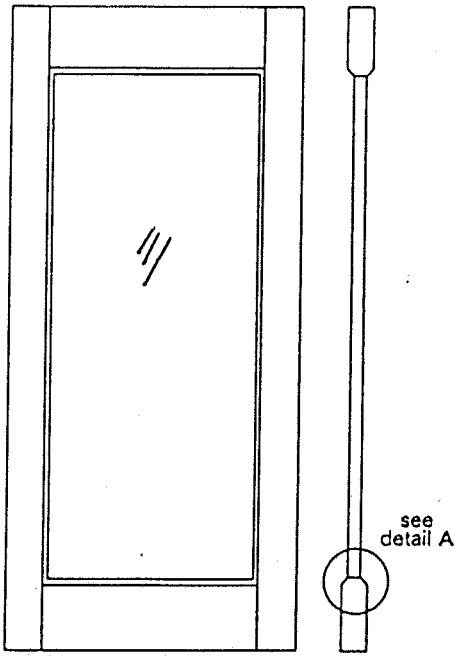

Rim or French

PRODUCT RENEWED
ACCEPTANCE No. 00-0118.07
EXPIRATION DATE 02/20/2003
By Ishaq I. Chanda
PRODUCT CONTROL DIVISION
BUILDING CODE COMPLIANCE OFFICE

Door Leaf Construction

Stiles and rails are solid wood construction of either one of the following wood species:

a.) South American Grey Wood — Mara Blanca (Cedrelinga cateneaformis) or
b.) South American Cedar — Cedro (Cedrela sp.) or
c.) South American Amazonic Oak — Roble, Tumi, Trebol, Soroico (Amburana cearensis) or
d.) South American Mahogany — Caoba, Mogno, Mara (Swietenia macrophylla) or
e.) South American Possumwood — Ochee (Hura crepitans L.) or
f.) South American Banak — Gabun (Virola sebifera Aubl.)
g.) South American Redwood — Cambana (Erisma Uncinatum)

DESIGN PRESSURE
Positive: +48.3
Negative: -58.5

All American Supply Company 12900 S.W. 122nd Avenue Miami, FL 33186 Ph: 305-255-7783	Rim or French Door		
	Drawn By: Bucky Parrish		
	Revisions:		
	Drawing No: 2000-01	Rev Date: 28 June 2000	Page 1 of 6

Product Type And Series:

Model SVC36 Single Light Door w/6 Raised Panels

Configuration:

Single Slab
Dimensions: 1.77" x 36" x96"

Daylight Opening:

Dimensions: 23.5" x 12"

Corner Construction:

Top Rail: 1.77" x 26.5" x 7.67"
Butted with two .629" dia. x 4.72" long wood dowels 2.36" penetration into the stiles left and right.

Bottom Rail: 1.77" x 26.5" x 7.67"
Mortise and Tenon
.31" thick x 2.36" wide x 2.95" high

Lock Rail: N/A

Intermediate Rail: Three (3) 1.77" x 26.5" x 4.75"
Butted with two .629" dia. x 4.72" long wood dowels 2.36" penetration into the stiles left and right.

Stiles: 1.77" x 4.75" x 96"

Infill Panels: 1.37" thick

Size: Six (6) 12" x 14.60"

Mullions:

Size: Three (3) 1.77" x 4.75" x 14.60"
All Mullions incorporate butt construction and two (2) .629 dia. x 4.72" long wood dowels 2.36" penetration into the rails bottom and top.

detail A

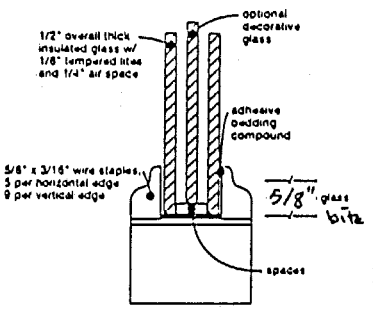

Door Crosscut

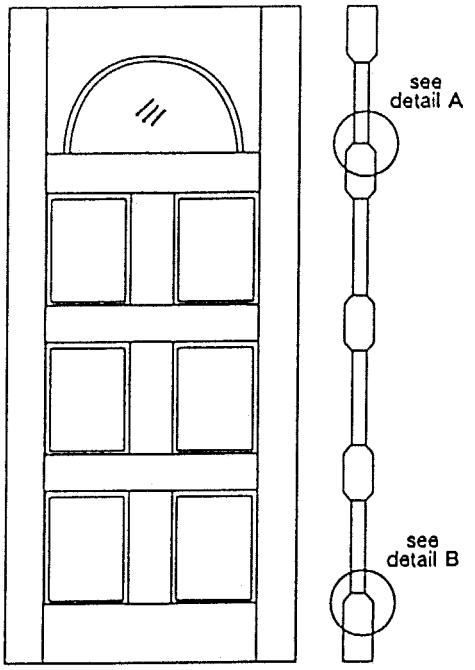

SVC36

detail B

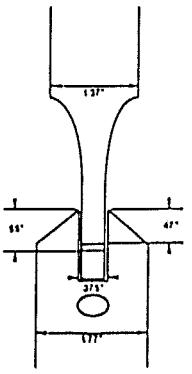

PRODUCT RENEWED
ACCEPTANCE No. 00-0118.07
EXPIRATION DATE 02/20/2003
By Ishaq I. Chanda
PRODUCT CONTROL DIVISION
BUILDING CODE COMPLIANCE OFFICE

Door Leaf Construction

Stiles and rails are solid wood construction of either one of the following wood species:

a.) South American Grey Wood — Mara Blanca (Cedrelinga cateneaformis) or
b.) South American Cedar — Cedro (Cedrela sp.) or
c.) South American Amazonic Oak — Roble, Tumi, Trebol, Soroico (Amburana cearensis) or
d.) South American Mahogany — Caoba, Mogno, Mara (Swietenia macrophylla) or
e.) South American Possumwood — Ochee (Hura crepitans L.) or
f.) South American Banak — Gabun (Virola sebifera Aubl.)
g.) South American Redwood — Cambana (Erisma Uncinatum)

DESIGN PRESSURE
Positive: +48.8
Negative: -58.5

All American Supply Company
12900 S.W. 122nd Avenue
Miami, FL 33186
Ph: 305-255-7783

SVC36 Single Light Door		
Drawn By: Bucky Parrish		
Revisions:		
Drawing No: 2000-01	Rev Date: 28 June 2000	Page 2 of 6

Product Type And Series:

Model 340DX Single Light Door w/2 Raised Panels

Configuration:

Single Slab
Dimensions: 1.77" x 36" x 96"

Daylight Opening:

Dimensions: 16.375 x 38.75"

Corner Construction:

Top Rail: 1.77" x 23" x 8.5"
Mortise and Tenon
.31" thick x 2.36" wide x 2.95" high

Bottom Rail: 1.77" x 31.25" x 8.5"
Mortise and Tenon
.31" thick x 2.36" wide x 2.95" high

Lock Rail: 1.77" x 23" x 8.02"
Butted with two .629" dia. x 4.72" long wood dowels 2.36" penetration into the stiles left and right.

Intermediate Rail: N/A

Stiles: 1.77" x 6.69" x 96"

Infill Panels: 1.37" thick

Size: One (1) 24.01" x 48.03"
Two (2) 9.25" x 18.50"

Mullions:

Size: One (1) 1.77" x 6.56" x 14.56"
All Mullions incorporate butt construction and two (2) .629 dia. x 4.72" long wood dowels 2.36" penetration into the rails bottom and top.

Mouldings:

Size: Various

detail A

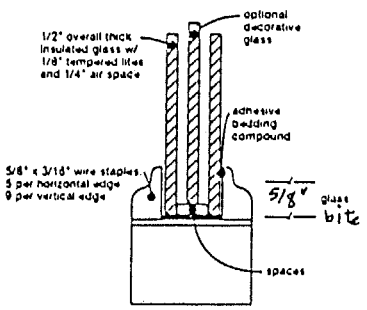

Door Crosscut

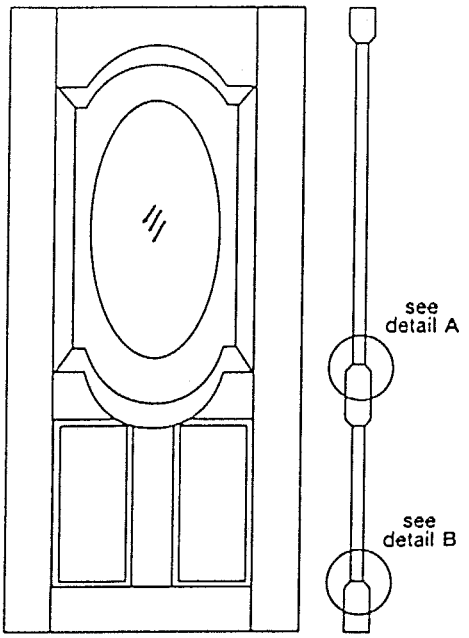

340DX

detail B

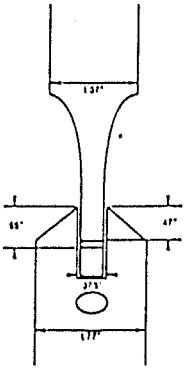

PRODUCT RENEWED
ACCEPTANCE No. 00-0118.07
EXPIRATION DATE 02/20/2003
By Ishaq I. Chanda
PRODUCT CONTROL DIVISION
BUILDING CODE COMPLIANCE OFFICE

Door Leaf Construction

Stiles and rails are solid wood construction of either one of the following wood species:

a.) South American Grey Wood — Mara Blanca (Cedrelinga cateneaformis) or
b.) South American Cedar — Cedro (Cedrela sp.) or
c.) South American Amazonic Oak — Roble, Tumi, Trebol, Soroico (Amburana cearensis) or
d.) South American Mahogany — Caoba, Mogno, Mara (Swietenia macrophylla) or
e.) South American Possumwood — Ochee (Hura crepitans L.) or
f.) South American Banak — Gabun (Virola sebifera Aubl.)
g.) South American Redwood — Cambana (Erisma Uncinatum)

DESIGN PRESSURE
Positive: +48.8
Negative: -58.5

All American Supply Company 12900 S.W. 122nd Avenue Miami, FL 33186 Ph: 305-255-7783	340DX Single Light Door		
	Drawn By: Bucky Parrish		
	Revisions:		
	Drawing No: 2000-01	Rev Date: 28 June 2000	Page 3 of 6

Product Type And Series:

Model 340S Single Light Door w/2 Raised Panels

Configuration:

Single Slab
Dimensions: 1.77" x 36" x 96"

Daylight Opening:

Dimensions: 16.375 x 52"

Corner Construction:

Top Rail: 1.77" x 23" x 6.49"
Mortise and Tenon
.31" thick x 2.36" wide x 2.95" high

Bottom Rail: 1.77" x 23" x 8.5"
Mortise and Tenon
.31" thick x 2.36" wide x 2.95" high

Lock Rail: 1.77" x 23" x 6.49"
Butted with two .629" dia. x 4.72" long wood dowels 2.36" penetration into the stiles left and right.

Intermediate Rail: N/A

Stiles: 1.77" x 6.49" x 96"

Infill Panels: 1.37" thick

Size: One (1) 24.00" x 48.03"
Two (2) 9.05" x 12.59"

Mullions:

Size: One (1) 1.77" x6.49" x 12.67"
All Mullions incorporate butt construction and two (2) .629 dia. x 4.72" long wood dowels 2.36" penetration into the rails bottom and top.

Mouldings:

Size: Various

detail A

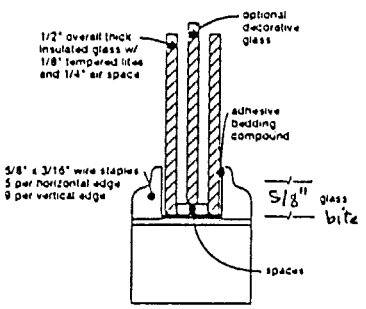

Door Crosscut

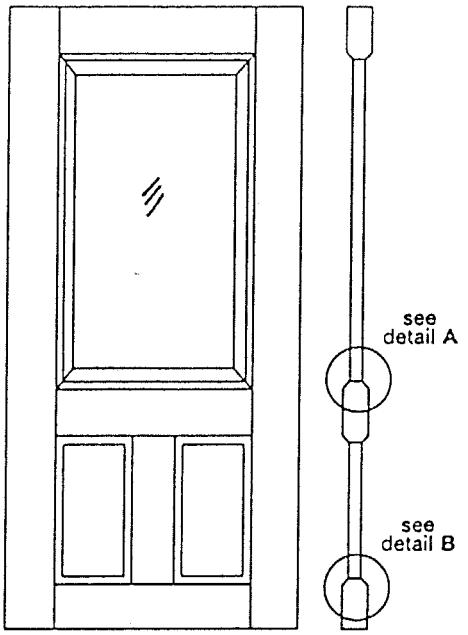

340S

detail B

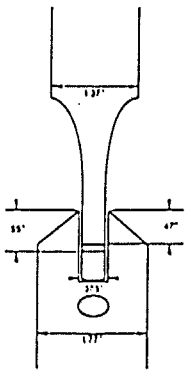

PRODUCT RENEWED
ACCEPTANCE No. 00-0118.07
EXPIRATION DATE 02/20/2003
By Ishaq I. Chanda
PRODUCT CONTROL DIVISION
BUILDING CODE COMPLIANCE OFFICE

Door Leaf Construction

Stiles and rails are solid wood construction of either one of the following wood species:

a.) South American Grey Wood — Mara Blanca (Cedrelinga cateneaformis) or
b.) South American Cedar — Cedro (Cedrela sp.) or
c.) South American Amazonic Oak — Roble, Tumi, Trebol, Soroico (Amburana cearensis) or
d.) South American Mahogany — Caoba, Mogno, Mara (Swietenia macrophylla) or
e.) South American Possumwood — Ochee (Hura crepitans L.) or
f.) South American Banak — Gabun (Virola sebifera Aubl.)
g.) South American Redwood — Cambana (Erisma Uncinatum)

DESIGN PRESSURE
Positive: +48.8
Negative: -58.5

All American Supply Company
12900 S.W. 122nd Avenue
Miami, FL 33186
Ph: 305-255-7783

340S Single Light Door		
Drawn By: Bucky Parrish		
Revisions:		
Drawing No: 2000-01	Rev Date: 28 June 2000	Page 4 of 6

Product Type And Series:

Model 360 Double Light Door w/2 Raised Panels. Diana

Configuration:

Single Slab
Dimensions: 1.75" x 36" x 96"

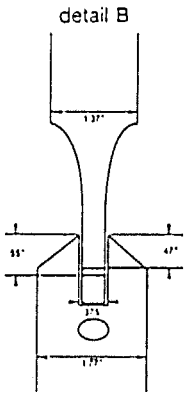

Corner Construction:

Top Rail: 1.75" x 6.5" x 24"
Mortise and Tenon
.31" thick x 2.36" wide x 2.95" high

Bottom Rail: 1.75" x 10.5" x 24"
Mortise and Tenon
.31" thick x 2.36" wide x 2.95" high

Lock Rail: 1.75" x 5.5" x 24"
Butted with two .629" dia. x 4.72" long wood dowels
2.36" penetration into the stiles left and right.

Intermediate Rail: N/A

Stiles: 1.75" x 6" x 96"

Infill Panels: 1.37" thick

Size: Two (2) 24" x 36.5"

Mullions:

Size: Two (2) 5.25" x 36.5"
Two (2) 2.125" x 3.125"
All Mullions incorporate butt construction and two (2) .629 dia. x 4.72" long wood dowels 2.36" penetration into the rails bottom and top.

Intermediate Splines: Two (2) 3.125" x 3.125"

Mouldings:

Size: Various

Door Crosscut

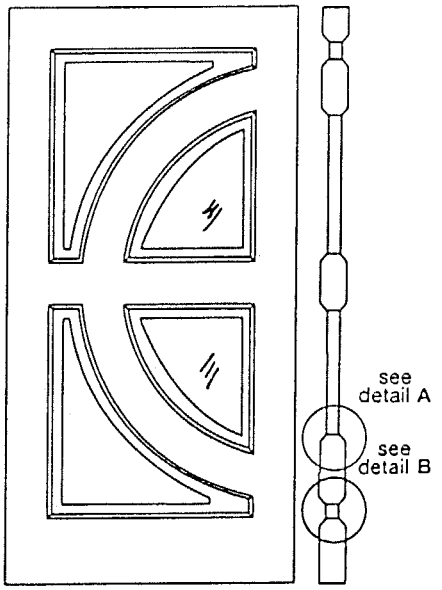

PRODUCT RENEWED
ACCEPTANCE No. 00-0118.07
EXPIRATION DATE 02/20/2003
By Ishay I. Chanda
PRODUCT CONTROL DIVISION
BUILDING CODE COMPLIANCE OFFICE

Door Leaf Construction
Stiles and rails are solid wood construction of either one of the following wood species:

a.) South American Grey Wood — Mara Blanca (Cedrelinga cateneaformis) or
b.) South American Cedar — Cedro (Cedrela sp.) or
c.) South American Amazonic Oak — Roble, Tumi, Trebol, Soroico (Amburana cearensis) or
d.) South American Mahogany — Caoba, Mogno, Mara (Swietenia macrophylla) or
e.) South American Possumwood — Ochee (Hura crepitans L.) or
f.) South American Banak — Gabun (Virola sebifera Aubl.)
g.) South American Redwood — Cambana (Erisma Uncinatum)

DESIGN PRESSURE
Positive: +48.8
Negative: -58.5

All American Supply Company
12900 S.W. 122nd Avenue
Miami, FL 33186
Ph: 305-255-7783

Model 360 Double Light Door		
Drawn By: Bucky Parrish		
Revisions:		
Drawing No: 2000-01	Rev Date: 28 June 2000	Page 5 of 6

Product Type And Series:

Model 380 Single Light Door w/2 Raised Panels. Arch

Configuration:

Single Slab
Dimensions: 1.75" x 36" x96"

Daylight Opening:

Dimensions: 7.75 x 28"

Corner Construction:

Top Rail: 1.75" x 6.5" x 24.5"
Mortise and Tenon
.31" thick x 2.36" wide x 2.95" high

Bottom Rail: 1.75" x 9" x 24.5"
Mortise and Tenon
.31" thick x 2.36" wide x 2.95" high

Lock Rail: 1.75" x 5.5" x 24"
Butted with two .625" dia. x 5" long wood dowels
2.5" penetration into the stiles left and right.

Intermediate Rail: N/A

Stiles: 1.75" x 5.75" x 96"

Infill Panels: 1.37" thick

Size: Two (2) 39.8125" x 6.8125"
Two (2) 6.1875" x 6.625"

Mullions:

Size: Two (2) 3.75" x 6.8125"
Two (2) 6.375" x 4.75"
All Mullions incorporate butt construction and two (2) .629 dia. x 4.72" long wood dowels 2.36" penetration into the rails bottom and top.

Mouldings:

Size: Various

Door Crosscut

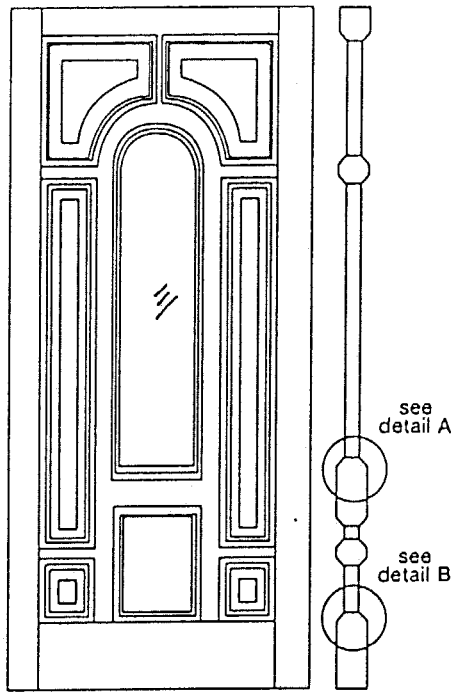

Arch Door

detail A

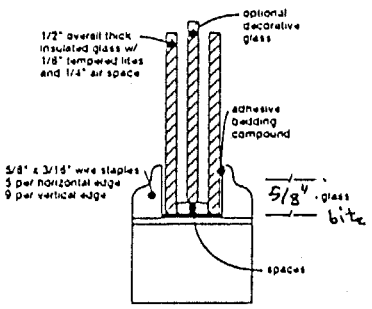

detail B

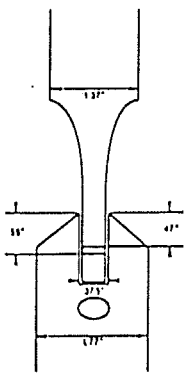

PRODUCT RENEWED
ACCEPTANCE No. 00-0118.07
EXPIRATION DATE 02/20/2003
By Ishaq I. Chanda
PRODUCT CONTROL DIVISION
BUILDING CODE COMPLIANCE OFFICE

Door Leaf Construction

Stiles and rails are solid wood construction of either one of the following wood species:

a.) South American Grey Wood — Mara Blanca (Cedrelinga cateneaformis) or
b.) South American Cedar — Cedro (Cedrela sp.) or
c.) South American Amazonic Oak — Roble, Tumi, Trebol, Soroico (Amburana cearensis) or
d.) South American Mahogany — Caoba, Mogno, Mara (Swietenia macrophylla) or
e.) South American Possumwood — Ochee (Hura crepitans L.) or
f.) South American Banak — Gabun (Virola sebifera Aubl.)
g.) South American Redwood — Cambana (Erisma Uncinatum)

DESIGN PRESSURE
Positive: +48.8
Negative: -58.5

All American Supply Company
12900 S.W. 122nd Avenue
Miami, FL 33186
Ph: 305-255-7783

Model 380 Single Light Door		
Drawn By: Bucky Parrish		
Revisions:		
Drawing No: 2000-01	Rev Date: 28 June 2000	Page 6 of 6