MIAMI-DADE COUNTY, FLORIDA
METRO-DADE FLAGLER BUILDING

BUILDING CODE COMPLIANCE OFFICE
METRO-DADE FLAGLER BUILDING
140 WEST FLAGLER STREET, SUITE 1603
MIAMI, FLORIDA 33130-1563
(305) 375-2901 FAX (305) 375-2908

CONTRACTOR LICENSING SECTION
(305) 375-2527 FAX (305) 375-2558

CONTRACTOR ENFORCEMENT DIVISION
(305) 375-2966 FAX (305) 375-2908

PRODUCT CONTROL DIVISION
(305) 375-2902 FAX (305) 372-6339

PRODUCT CONTROL NOTICE OF ACCEPTANCE

Metal Sales Manufacturing Corporation
7800 State Road 60
Sellersburg ,IN 47172

Your application for Notice of Acceptance (NOA) of:
24 Gauge Vertical Seam Metal Roof Panel
under Chapter 8 of the Code of Miami-Dade County governing the use of Alternate Materials and Types of Construction, and completely described herein, has been recommended for acceptance by the Miami-Dade County Building Code Compliance Office (BCCO) under the conditions specified herein.

This NOA shall not be valid after the expiration date stated below. BCCO reserves the right to secure this product or material at any time from a jobsite or manufacturer's plant for quality control testing. If this product or material fails to perform in the approved manner, BCCO may revoke, modify, or suspend the use of such product or material immediately. BCCO reserves the right to revoke this approval, if it is determined by BCCO that this product or material fails to meet the requirements of the South Florida Building Code.

The expense of such testing will be incurred by the manufacturer.

ACCEPTANCE NO.: 00-0214.03
EXPIRES: 03/08/2004

Raul Rodriguez
Chief Product Control Division

THIS IS THE COVERSHEET, SEE ADDITIONAL PAGES FOR SPECIFIC AND GENERAL CONDITIONS
BUILDING CODE & PRODUCT REVIEW COMMITTEE

This application for Product Approval has been reviewed by the BCCO and approved by the Building Code and Product Review Committee to be used in Miami-Dade County, Florida under the conditions set forth above.

Francisco J. Quintana, R.A.
Director
Miami-Dade County
Building Code Compliance Office

APPROVED: 03/08/2001

ROOFING SYSTEM APPROVAL

Category: Roofing
Sub-Category: Roofing Panels

Approval Date: **March 8, 2001**

Expiration Date: **March 8, 2004**

Material: Steel
Type Non-Structural

System Trade Names:

Metal Sales
Vertical Seam Metal Roof

TRADE NAMES OF PRODUCTS MANUFACTURED OR LABELED BY APPLICANT:

Product	Dimensions	Test Specifications	Product Description
Vertical Seam Metal Roof	l = various w = 12", 16" or 18" h = 1.75" 0.0225" thick (panels are cut to appropriate length)	PA 110	Corrosion resistant, galvalume or galvanized, preformed, standing seam, coated, prefinished, metal panels.
Trim Pieces	l = varies w = varies min. 24 ga.	PA 110	Standard flashing and trim pieces. Manufactured for each panel width.
Panel Clips	2" wide x 1.875"high x 3.5" long 0.048" thick	PA 114 Appendix E	Corrosion resistant, formed, painted or unpainted steel clips for metal panel installation.

TRADE NAMES OF PRODUCTS MANUFACTURED BY OTHERS:

Product	Dimensions	Product Description	Manufacturer
Fire Barrier Board ("Dens Deck")	min. ¼" thick	Fire barrier for Class 'A' fire rating.	Georgia-Pacific with current PCA
Fire Barrier ("Roctex")	min. 450 grams/m^2	Fire barrier for Class 'A' fire rating.	Partek Insulations, Inc.
Fasteners (Panel Clips)	min. #10 coarse thread wood screw.	Corrosion resistant, pancake head, self-drilling, self-threading screws	generic
Sealant	N/A	Sealant for use at foam closure strip.	generic

Frank Zuloaga, RRC
Roofing Product Control Examiner

EVIDENCE SUBMITTED:

Test Agency	Test Identifier	Test Name/Report	Date
Celotex Corporation Testing Services	MTS 520103-4	PA 100	Dec. 1998
Celotex Corporation Testing Services	MTS 520103	ASTM E 8	Jan. 1999
Akzo Coatings		ASTM G 23 ASTM B 117	
Valspar Corporation		ASTM G 23 ASTM B 117	
Underwriters Laboratory	R9697	UL 790	July 1998
Hurricane Test Laboratory, Inc.	0103-1213-98	PA 125	Dec. 1998
Hurricane Test Laboratory, Inc.	0103-1213-98	PA 125	09/25/00
PRI Asphalt Technologies, Inc.	MSM-01-02-01	TAS 100	10/24/00

Frank Zuloaga, RRC
Roofing Product Control Examiner

SYSTEMS:

SYSTEM A-1: Vertical Seam Metal Roof Panel

Deck Type: Wood, Non-insulated

Deck Description: New Construction or Re-roof
$^{19}/_{32}$" or greater plywood or wood plank.

Slope Range: 2":12" or greater

Maximum Uplift Pressure: The maximum allowable design pressure for the 12" through 18" wide panel shall be **–117.5** psf.

Deck Attachment: In accordance with applicable Building Code, but in no case shall it be less than 8d annular ring shank nails spaced 6" o.c. In reroofing, where the deck is less than $^{19}/_{32}$" thick (Minimum $^{15}/_{32}$") The above attachment method must be in addition to existing attachment.

Underlayment: Minimum underlayment shall be an ASTM D 226 Type II installed with a minimum 4" side-lap and 6" end-laps. Underlayment shall be fastened with corrosion resistant tin-caps and 12 gauge 1 ¼" annular ring-shank nails, spaced 6" o.c. at all laps and two staggered rows 12" o.c. in the field of the roll.

Valleys: Valley construction shall be in compliance with Roofing Application Standard RAS 133 and with Metal Sales Manufacturing Corporation's current published installation instructions.

Fire Barrier Board: For class A or B fire rating, install minimum ¼" thick Georgia Pacific "Dens Deck" or one layer of "Roctex" or 5/8" water resistant type X gypsum sheathing with treated core and facer, over the deck prior to installing the underlayment in compliance with Roofing Application Standard RAS 133.

Metal Panels and Accessories: Install the "Vertical Seam Panels" and accessories in compliance with Metal Sales Manufacturing Corporation's current, published installation instructions and details. Flashing, penetrations, valley construction and other details shall be constructed in compliance with the minimum requirements provided in Roofing Application Standards RAS 133. Panels shall be installed with approved clips (3.5" long x 2" wide x 1.875" tall), attached to substrate with two corrosion resistant #10 screw of sufficient length to penetrate through the sheathing a minimum of 3/16", at a spacing not exceed 36" o.c. and at 2" from each end.

Frank Zuloaga, RRC
Roofing Product Control Examiner

SYSTEM LIMITATIONS:

1. Panels shall be roll formed in continuous lengths from eave to ridge. Maximum lengths shall be as described in Roofing Application Protocol RAS 133.

2. All panels shall be permanently labeled with the manufacturer's name or logo, city, state and the following statement: "Miami-Dade County Product Control Approved. All clips shall be permanently labeled with manufacturer's name, and/or logo, and/or model.

PROFILE DRAWINGS

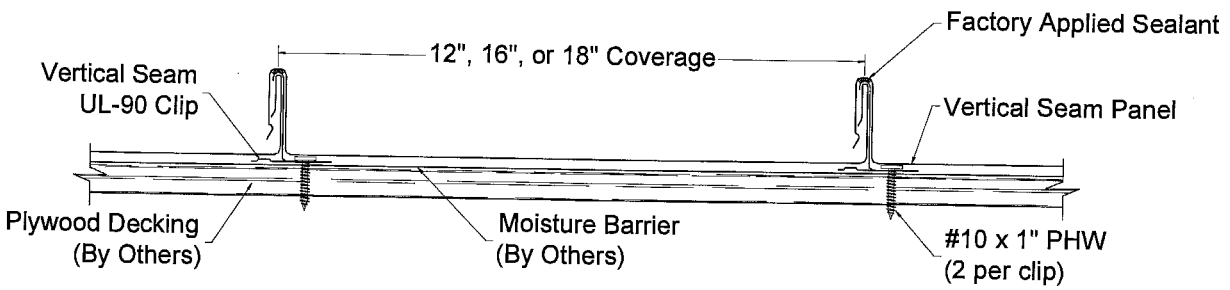

VERTICAL SEAM STEEL PANEL

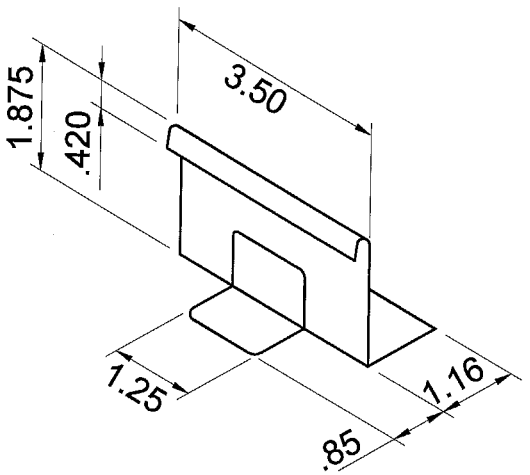

PANEL CLIP

Frank Zuloaga, RRC
Roofing Product Control Examiner

NOTICE OF ACCEPTANCE STANDARD CONDITIONS

1 Renewal of this Acceptance (approval) shall be considered after a renewal application has been filed and the original submitted documentation, including test supporting data, engineering documents, are no older than eight (8) years.

2 Any and all approved products shall be permanently labeled with the manufacturer's name, city, state, and the following statement: "Miami-Dade County Product Control Approved", or as specifically stated in the specific conditions of this Acceptance.

3 Renewals of Acceptance will not be considered if:
a) There has been a change in the South Florida Building Code affecting the evaluation of this product and the product is not in compliance with the code changes;
b) The product is no longer the same product (identical) as the one originally approved;
c) If the Acceptance holder has not complied with all the requirements of this acceptance, including the correct installation of the product;
d) The engineer who originally prepared, signed and sealed the required documentation initially submitted, is no longer practicing the engineering profession.

4 Any revision or change in the materials, use, and/or manufacture of the product or process shall automatically be cause for termination of this Acceptance, unless prior written approval has been requested (through the filing of a revision application with appropriate fee) and granted by this office.

5 Any of the following shall also be grounds for removal of this Acceptance:
a) Unsatisfactory performance of this product or process;
b) Misuse of this Acceptance as an endorsement of any product, for sales, advertising or any other purposes.

6 The Notice of Acceptance number preceded by the words Miami-Dade County, Florida, and followed by the expiration date may be displayed in advertising literature. If any portion of the Notice of Acceptance is displayed, then it shall be done in its entirety.

7 A copy of this Acceptance as well as approved drawings and other documents, where it applies, shall be provided to the user by the manufacturer or its distributors and shall be available for inspection at the job site at all times. The copies need not be resealed by the engineer.

8 Failure to comply with any section of this Acceptance shall be cause for termination and removal of Acceptance.

9 This Acceptance contains pages 1 through 6.

END OF THIS ACCEPTANCE

Frank Zuloaga, RRC
Roofing Product Control Examiner