MIAMI-DADE

MIAMI-DADE COUNTY, FLORIDA
METRO-DADE FLAGLER BUILDING

BUILDING CODE COMPLIANCE OFFICE
METRO-DADE FLAGLER BUILDING
140 WEST FLAGLER STREET, SUITE 1603
MIAMI, FLORIDA 33130-1563
(305) 375-2901 FAX (305) 375-2908

CONTRACTOR LICENSING SECTION
(305) 375-2527 FAX (305) 375-2558

CONTRACTOR ENFORCEMENT SECTION
(305) 375-2966 FAX (305) 375-2908

PRODUCT CONTROL DIVISION
(305) 375-2902 FAX (305) 372-6339

PRODUCT CONTROL NOTICE OF ACCEPTANCE

Bernardo Shutter Corporation
915 S. Dixie Hwy East
Pompano Beach FL 33060

Your application for Product Approval of:
Extruded Aluminum Hinged Colonial Shutter
under Chapter 8 of the Code of Miami-Dade County governing the use of Alternate Materials and Types of Construction, and completely described herein, has been recommended for acceptance by the Miami-Dade County Building Code Compliance Office (BCCO) under the conditions specified herein.

This approval shall not be valid after the expiration date stated below. BCCO reserves the right to secure this product or material at anytime from a jobsite or manufacturer's plant for quality control testing.
If this product or material fails to perform in the approved manner, BCCO may revoke, modify, or suspend the use of such product or material immediately. BCCO reserves the right to revoke this approval, if it is determined BCCO that this product or material fails to meet the requirements of the South Florida Building Code.

The expense of such testing will be incurred by the manufacturer.

Acceptance No.: 00-0307.05

Expires: 05/01/2003

Raul Rodriguez
Chief Product Control Division

THIS IS THE COVERSHEET, SEE ADDITIONAL PAGES FOR SPECIFIC AND GENERAL CONDITIONS

BUILDING CODE & PRODUCT REVIEW COMMITTEE

This application for Product Approval has been reviewed by the BCCO and approved by the Building Code and Product Review Committee to be used in Dade County, Florida under the conditions set forth above.

Francisco J. Quintana, R.A.
Director
Miami-Dade County
Building Code Compliance Office

Approved: 05/26/2000

Internet mail address: postmaster@buildingcodeonline.com **Homepage: http://www.buildingcodeonline.com**

Bernardo Shutter Corporation

ACCEPTANCE No. : **00-0307.05**

APPROVED : MAY 2 6 2000

EXPIRES : **05/01/2003**

NOTICE OF ACCEPTANCE: SPECIFIC CONDITIONS

1. SCOPE

This renews the Notice of Acceptance No. 96-0703.02, which was issued on May 1, 1997. It approves an aluminum hinged colonial shutter as described in Section 2 of this Notice of Acceptance, designed to comply with the South Florida Building Code, 1994 Edition for Miami-Dade County, for the locations where the pressure requirements, as determined by SFBC Chapter 23, do not exceed the Design Pressure Rating values indicated in the approved drawings.

2. PRODUCT DESCRIPTION

This Aluminum Hinged Colonial Shutter and its components shall be constructed in strict compliance with the following documents: Drawing No. 96-100, titled "Hinged Colonial Shutter", prepared by Jenkins & Charland, Inc., dated March 25, 1996, revised on December 10, 1996, sheets 1 through 5 of 5, bearing the Miami-Dade County Product Control Approval and Renewal stamps with the Notice of Acceptance numbers and approval dates by the Miami-Dade County Product Control Division. These documents shall hereinafter be referred to as the approved drawings.

3. LIMITATIONS

All permanent set components, included but not limited to embedded anchor bolts, threaded cones, metal shields, headers and sills, must be protected against corrosion, contamination and damage at all times.

4. INSTALLATION

This aluminum hinged colonial shutter and its components shall be installed in strict compliance with the approved drawings.

5. LABELING

Each unit shall bear a permanent label with the manufacturer's name or logo, city, state and the following statement: "Miami-Dade County Product Control Approved". Also, each panel shall bear a permanent Warning Note advising the home owner and/or tenant that during hurricane warning periods, winds speeds approaching 75 MPH, shutter must be closed and all removable locking storm bars must be installed and fastened as shown on the approved drawing.

6. BUILDING PERMIT REQUIREMENTS

6.1 Application for building permit shall be accompanied by copies of the following:

6.1.1 This Notice of Acceptance.

6.1.2 Duplicate copies of the approved drawings, as identified in Section 2 of this Notice of Acceptance, clearly marked to show the components selected for the proposed installation.

6.1.3 Any other documents required by the Building Official or the South Florida Building Code (SFBC) in order to properly evaluate the installation of this system.

Helmy A. Makar, P.E. -Product Control Examiner
Product Control Division

Bernardo Shutter Corporation

ACCEPTANCE No. : 00-0307.05

APPROVED : MAY 2 6 2000

EXPIRES : 05/01/2003

NOTICE OF ACCEPTANCE: STANDARD CONDITIONS

1 Renewal of this Acceptance (approval) shall be considered after a renewal application has been filed and the original submitted documents, including test-supporting data, engineering documents, are no older than eight (8) years.

2. Any and all approved products shall be permanently labeled with the manufacturer's name, city, state, and the following statement: "Miami-Dade County Product Control Approved", or as specifically stated in the specific conditions of this Acceptance.

3. Renewals of Acceptance will not be considered if:
   a. There has been a change in the South Florida Building Code affecting the evaluation of this product and the product is not in compliance with the code changes.
   b. The product is no longer the same product (identical) as the one originally approved.
   c. If the Acceptance holder has not complied with all the requirements of this acceptance, including the correct installation of the product.
   d. The engineer, who originally prepared, signed and sealed the required documentation initially submitted, is no longer practicing the engineering profession.

4. Any revision or change in the materials, use, and/or manufacture of the product or process shall automatically be cause for termination of this Acceptance, unless prior written approval has been requested (through the filing of a revision application with appropriate fee) and granted by this office.

5. Any of the following shall also be grounds for removal of this Acceptance:
   a. Unsatisfactory performance of this product or process.
   b. Misuse of this Acceptance as an endorsement of any product, for sales, advertising or any other purposes.

6. The Notice of Acceptance number preceded by the words Miami-Dade County, Florida, and followed by the expiration date may be displayed in advertising literature. If any portion of the Notice of Acceptance is displayed, then it shall be done in its entirety.

7. A copy of this Acceptance as well as approved drawings and other documents, where it applies, shall be provided to the user by the manufacturer or its distributors and shall be available for inspection at the job site at all time. The engineer needs not reseal the copies.

8. Failure to comply with any section of this Acceptance shall be cause for termination and removal of Acceptance.

9. This Notice of Acceptance consists of pages 1, 2 and this last page 3.

END OF THIS ACCEPTANCE

Helmy A. Makar, P.E. -Product Control Examiner
Product Control Division

BERNARDO SHUTTER CORPORATION

A MEMBER OF THE SOLAROLL® GROUP

POMPANO BEACH, FLORIDA 33060

COLONIAL SHUTTER

GENERAL NOTES

1.0 THE SHUTTER SYSTEM IS DESIGNED TO MEET THE REQUIREMENTS OF THE SOUTH FLORIDA BUILDING CODE, SECTIONS 2909.6 & 3513. 1994 DADE COUNTY EDITION.

1.1 DESIGNING WIND PRESSURES SHALL BE DERIVED USING THE AMERICAN SOCIETY OF ENGINEERS STANDARD ASCE 7-88

1.2 THE LARGE MISSILE IMPACT, CYCLIC WIND PRESURE, AND UNIFORM STATIC AIR PRESURE TEST, ENTITLED 'AMERICAN TEST LAB REPORT #1220.01-95 DATED 12-20-95) PREPARED BY JOSE MITRANI WAS CONDUCTED IN ACCORDANCE TO THE REQUIREMENTS OF THE DADE COUNTY CODE COMPLIANCE OFFICE PROTOCOL # PA 201-94, PA 202-94 AND PA 203-94

1.3 MAXIMUM DESIGN LOAD ±75 PSF.

2.0 ALUMINUM COMPONENTS ARE DESIGNED IN ACCORDANCE WITH THE 'ALUMINUM CONSTRUCTION MANUAL'.

3.0 THE ALUMINUM ALLOYS USED TO DERIVE THESE DESIGN CHARTS ARE AS SHOWN IN THE DRAWINGS.

4.0 STEEL SURFACES IN CONTACT WITH ALUMINUM COMPONENTS SHALL BE GALVANIZED OR HAVE ONE COAT OF ZINC CHROMATE PRIMER IN ACCORDANCE WITH FEDERAL SPEC TTP-645.

5.0 THE EMBEDMENT FOR ANCHORS SHOWN IN THESE DRAWINGS IS THE REQUIRED MINIMUM PENETRATION INTO THE BASE MATERIAL OF THE SUPPORTING STRUCTURE. MINIMUM EDGE DISTANCE (3 1/2") SHOWN IN THESE DRAWINGS INCLUDE A 1/2" ALLOWANCE FOR STUCCO.

6.0 BOLTS, NUTS AND WASHERS SHALL BE STAINLESS STEEL OR ALUMINUM ALLOY 2024-T4 OR 7075-T6

7.0 DEFLECTION DESIGN CRITERIA.

7.1 MULLIONS HAVE BEEN SIZED TO LIMIT THE DEFLECTION OF THE ELEMENTS TO ≤ L/180 AT THE DESIGN LOAD.

7.2 SLATS HAVE BEEN SIZED TO LIMIT THE DEFLECTION AT THE DESIGN LOAD TO BE ≤ L/30 FOR SUCTION AND THE LESSER OF L/30 OR 2 INCHES WHEN SUBJECTED TO POSITIVE PRESSURE.

7.3 SHUTTERS SHALL BE CONFIGURED TO HAVE NO LESS THAN 3 3/8 INCHES MINIMUM CLEARANCE BETWEEN THE UNLOADED SLAT AND THE GLAZING FOR ELEVATIONS 0-30 FEET. CLEARANCE FOR SHUTTERS LOCATED ABOVE 30 FEET OF ELEVATION SHALL BE NO LESS THAN 2 INCHES. THESE FIGURES REPRESENT THE MAXIMUM SLAT DEFLECTION PLUS 1 INCH.

PRODUCT RENEWED
ACCEPTANCE No. 00-0307.05
EXPIRATION DATE May 01, 2003
By Helmy A. Kaker
PRODUCT CONTROL DIVISION
BUILDING CODE COMPLIANCE OFFICE

TABLE OF CONTENTS

PAGE NO.	DESCRIPTION
1	GENERAL NOTES, TABLE OF CONTENTS
2	(4 PANEL) FLUSH MOUNT APPLICATION
3	(4 PANEL) BUILDOUT APPLICATION
4	ASSEMBLY
5	COMPONENTS

PRODUCT MARKING

A LABEL SHALL BE PLACED ON THE LOWER RIGHT CORNER, WITH THE FOLLOWING STATEMENT:

EXTRUDED ALUMINUM COLONIAL SHUTTER
DADE COUNTY PRODUCT CONTROL APPROVED
MANUFACTURED BY BERNARDO SHUTTER, CORP.

American Consulting Engineers Council Member
Supporting Excellence in Engineering

JENKINS & CHARLAND INCORPORATED Consulting Engineers
3559 N.W. 53rd Street
FORT LAUDERDALE, FL 33309
(305) 484-7777

TO THE BEST OF MY KNOWLEDGE AND ABILITY, THE COMPLETED STRUCTURE DEPICTED ON THESE PLANS COMPLIES WITH THE APPLICABLE MINIMUM BUILDING CODES.

4/10/97
PROF. ENGINEER
GENE S. SANDERS
FLA. PE # 26590

APPROVED AS COMPLYING WITH THE SOUTH FLORIDA BUILDING CODE
DATE MAY 1 1997
BY Helmy A. Kaker
PRODUCT CONTROL DIVISION
BUILDING CODE COMPLIANCE OFFICE
ACCEPTANCE NO. 96-0703.02

BERNARDO SHUTTER CORPORATION POMPANO BEACH, FLORIDA 33060		
SCALE	DRAWING NUMBER	DRAWN BY VICKERY
DATE 4-25-96	96-100	REVISED 12-18-96
GENERAL NOTES & TABLE OF CONTENTS		PAGE NUMBER 1 OF 5

COLONIAL SHUTTER
(4 PANEL) FLUSH MOUNT

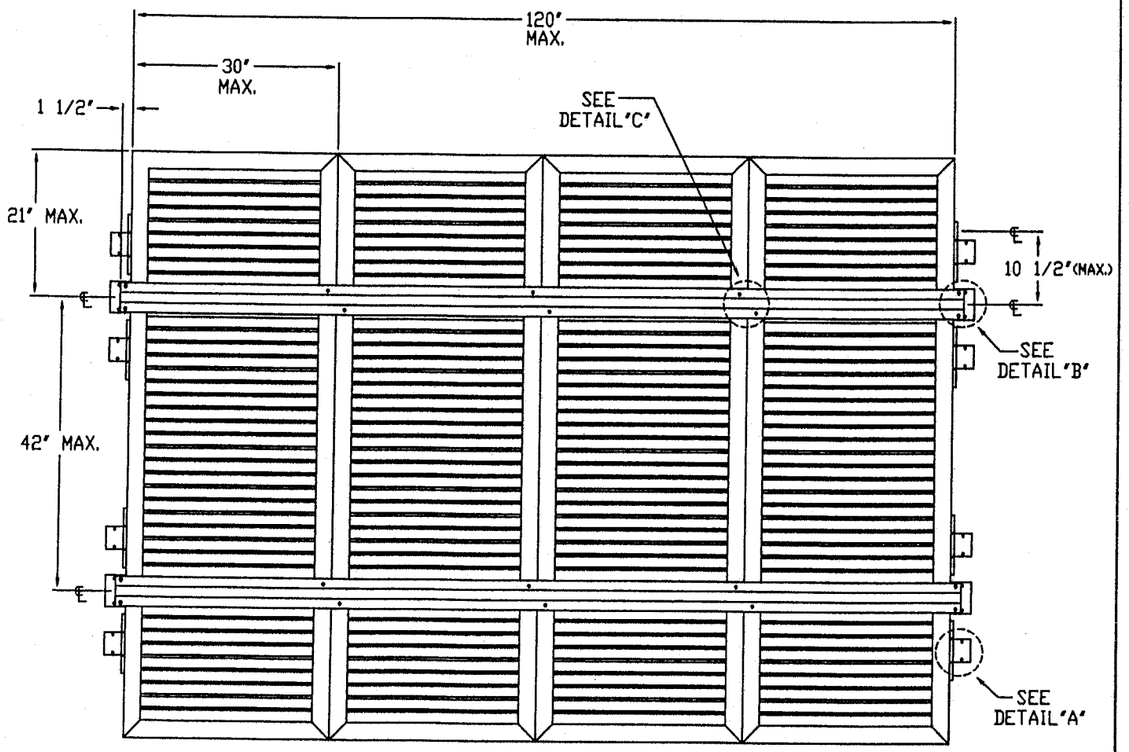

ELEVATION

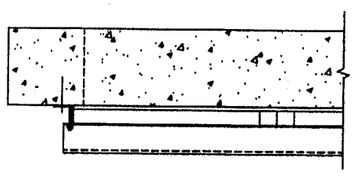

PLAN VIEW

STORM BAR REQUIREMENTS

HEIGHT	# OF STORM BARS
0 - 42"	1
43" - 84"	2
85" - 126"	3

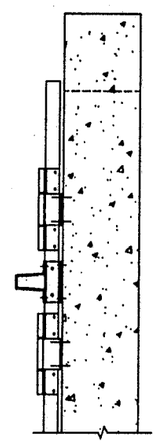

SIDE VIEW

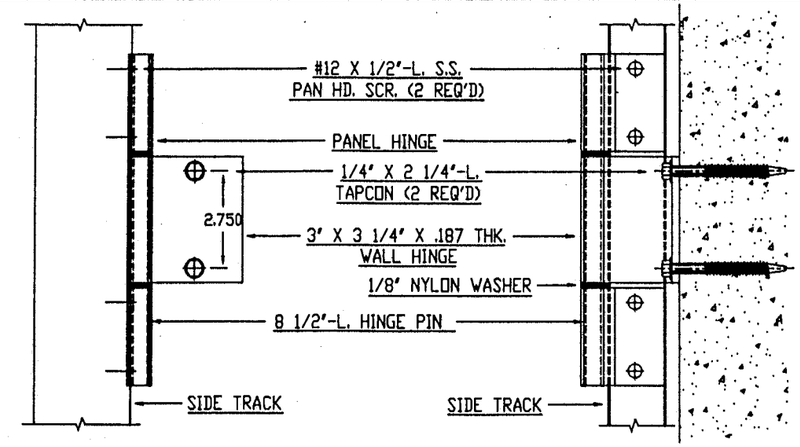

DETAIL "A"
FRONT VIEW WALL HINGE

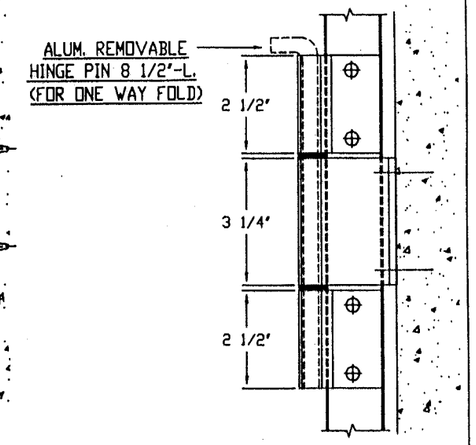

DETAIL "A"
SIDE VIEW WALL HINGE

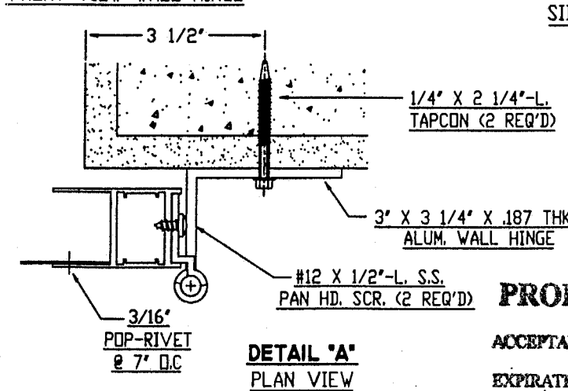

DETAIL "A"
PLAN VIEW

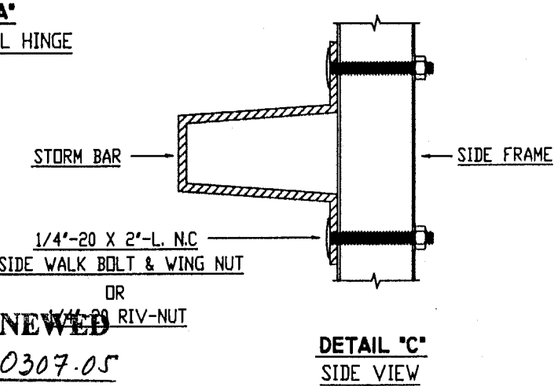

DETAIL "C"
SIDE VIEW
STORM BAR ATTACHED
TO SIDE TRACK

PRODUCT RENEWED
ACCEPTANCE No. 00-0307.05
EXPIRATION DATE May 01, 2003
By [signature]
PRODUCT CONTROL DIVISION
BUILDING CODE COMPLIANCE OFFICE

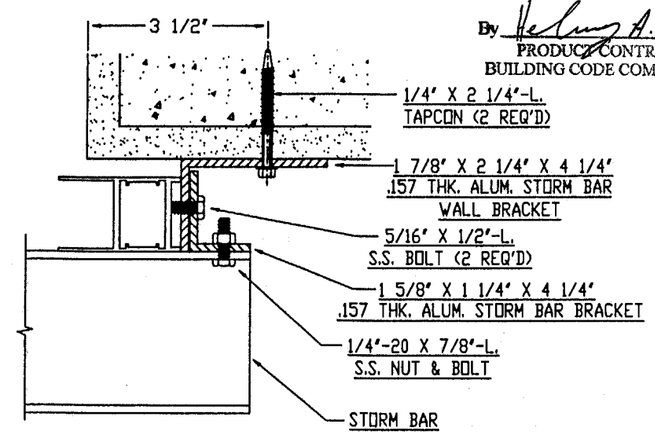

DETAIL "B"
PLAN VIEW
STORM BAR ATTACHED
TO WALL

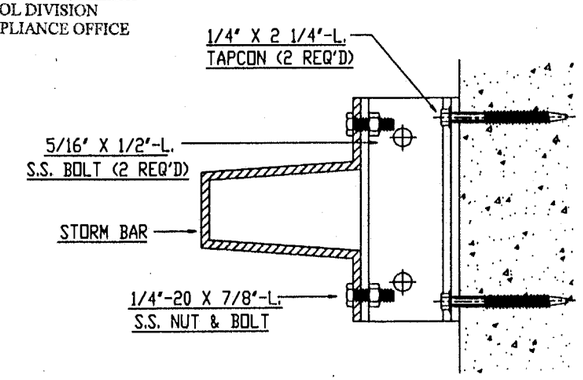

DETAIL "B"
SIDE VIEW
STORM BAR ATTACHED
TO WALL

APPROVED AS COMPLYING WITH THE SOUTH FLORIDA BUILDING CODE
DATE MAY 1 1997
BY [signature]
PRODUCT CONTROL DIVISION
BUILDING CODE COMPLIANCE OFFICE
ACCEPTANCE NO. 96-0703.02

American Consulting Engineers Council Member
Supporting Excellence in Engineering

JENKINS & CHARLAND
3000 N.W. 62nd St. Suite 7
FORT LAUSDALE, FL 33309
(305) 494-7777

TO THE BEST OF MY KNOWLEDGE AND ABILITY, THE COMPLETED STRUCTURE DEPICTED ON THESE PLANS COMPLIES WITH THE APPLICABLE MINIMUM BUILDING CODES.

PROF. ENGINEER
GENE S. SANDERS
FLA. PE # 26590
4/10/97

BERNARDO SHUTTER CORPORATION
POMPANO BEACH, FLORIDA 33060

SCALE	DRAWING NUMBER	DRAWN BY: VICKERY
DATE: 4-25-96	96-100	REVISED 12-18-96

COLONIAL SHUTTER
(4 PANEL) FLUSH MOUNT

PAGE NUMBER 2 OF 5

COLONIAL SHUTTER
(4 PANEL) BUILDOUT

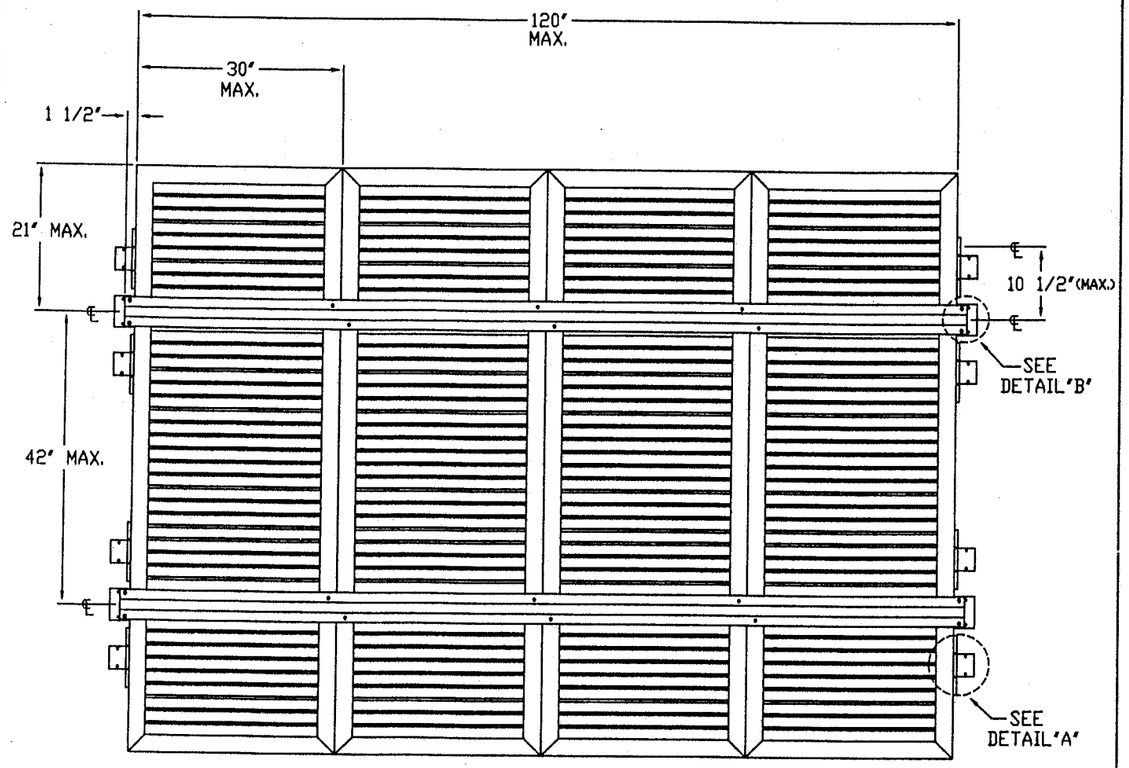

ELEVATION

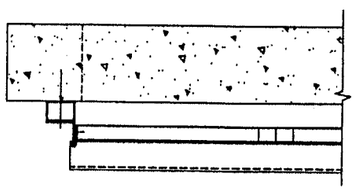

PLAN VIEW

STORM BAR REQUIREMENTS

HEIGHT	# OF STORM BARS
0 - 42"	1
43" - 84"	2
85" - 126"	3

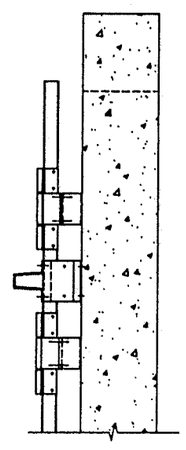

SIDE VIEW

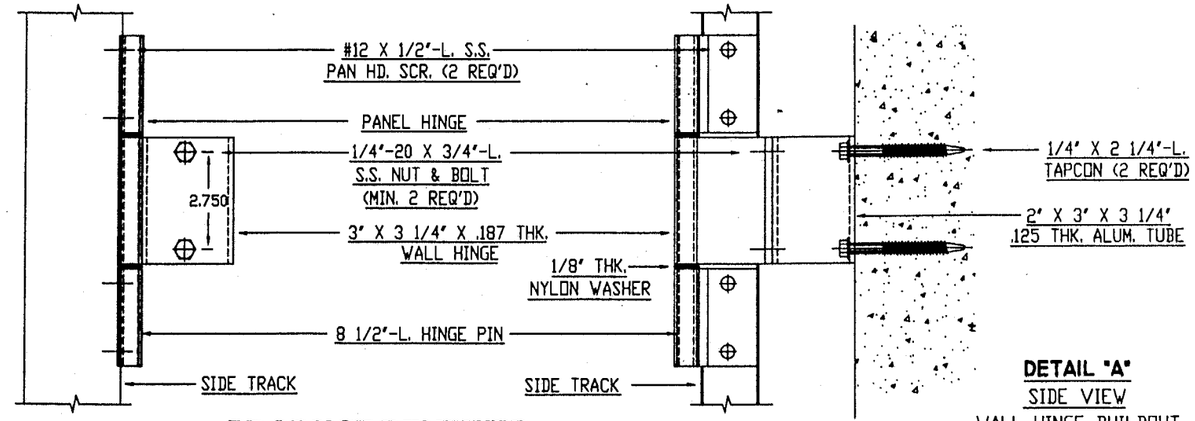

DETAIL "A"
SIDE VIEW
WALL HINGE BUILDOUT

DETAIL "A"
FRONT VIEW
WALL HINGE BUILDOUT

PRODUCT RENEWED
ACCEPTANCE No. 00-0307.05
EXPIRATION DATE May 01, 2003
By [signature]
PRODUCT CONTROL DIVISION
BUILDING CODE COMPLIANCE OFFICE

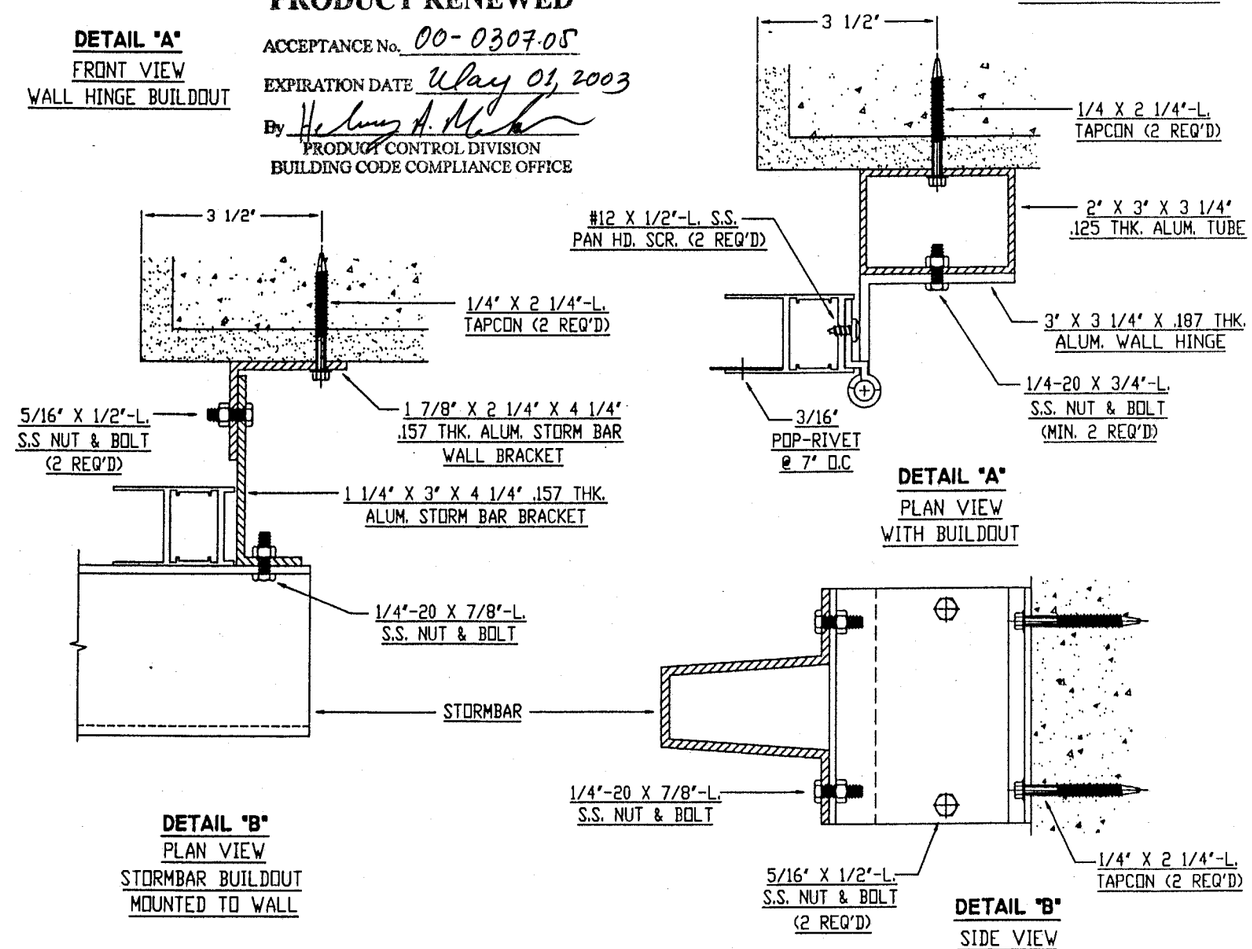

DETAIL "A"
PLAN VIEW
WITH BUILDOUT

DETAIL "B"
PLAN VIEW
STORMBAR BUILDOUT
MOUNTED TO WALL

DETAIL "B"
SIDE VIEW
STORMBAR BUILDOUT
MOUNTED TO WALL

American Consulting Engineers Council Member
Supporting Excellence in Engineering

JENKINS & CHARLAND
3009 N.W. 53rd Street
FORT LAUDERDALE, FL 33309
(305) 484-7777

TO THE BEST OF MY KNOWLEDGE AND ABILITY, THE COMPLETED STRUCTURE DEPICTED ON THESE PLANS COMPLIES WITH THE APPLICABLE MINIMUM BUILDING CODES.

PROF. ENGINEER
GENE S. SANDERS
FLA. PE # 26590
4/10/97

APPROVED AS COMPLYING WITH THE SOUTH FLORIDA BUILDING CODE
DATE MAY 1 1997
BY [signature]
PRODUCT CONTROL DIVISION
BUILDING CODE COMPLIANCE OFFICE
ACCEPTANCE NO. 96-0703.02

BERNARDO SHUTTER CORPORATION
POMPANO BEACH, FLORIDA 33060

SCALE:	DRAWING NUMBER	DRAWN BY: VICKERY
DATE: 4-25-96	96-100	REVISED: 12-10-96

COLONIAL SHUTTER
(4 PANEL) BUILDOUT

PAGE NUMBER 3 OF 5

COLONIAL SHUTTER ASSEMBLY

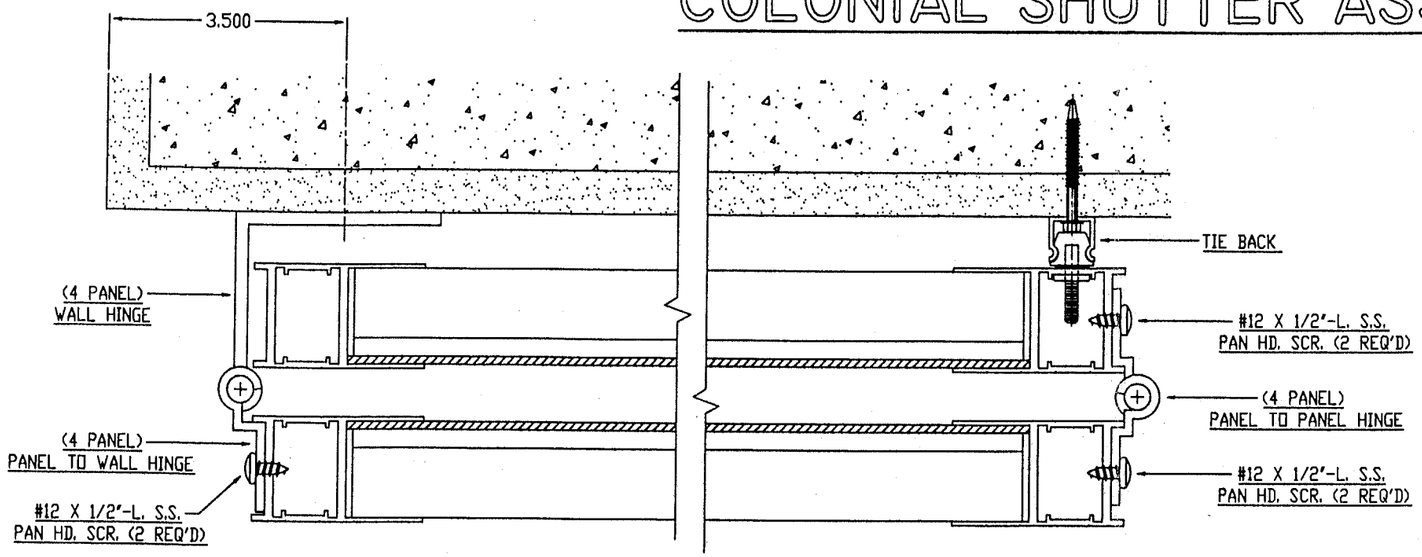

PLAN VIEW
(4 PANEL) STACK
(OPEN POSITION)

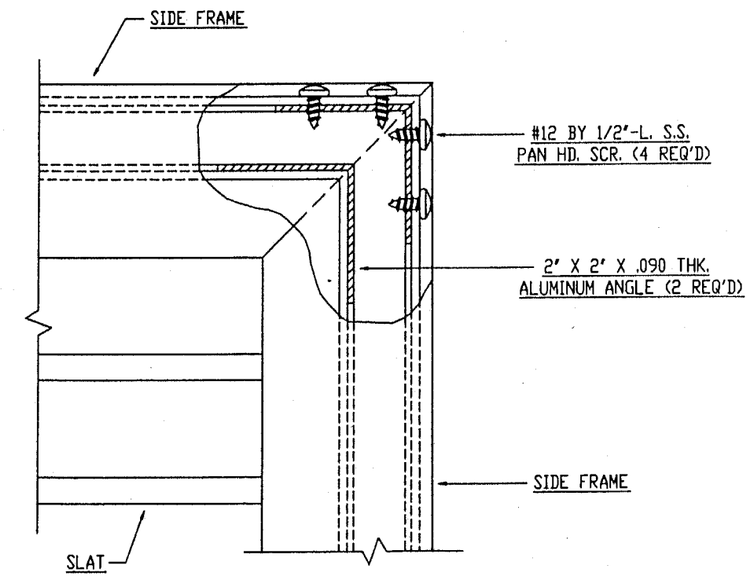

CORNER DETAIL OF SHUTTER
WITH (2) ANGLES SHOWN

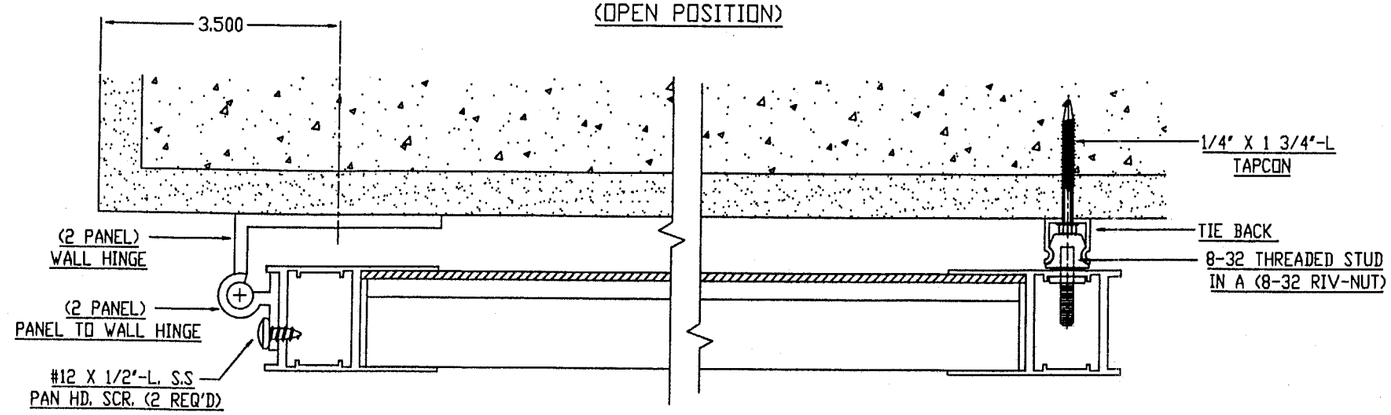

PLAN VIEW
(2 PANEL) STACK
(OPEN POSITION)

PRODUCT RENEWED
ACCEPTANCE No. 00-0307.05
EXPIRATION DATE May 01, 2003
By Helmy A. Mak
PRODUCT CONTROL DIVISION
BUILDING CODE COMPLIANCE OFFICE

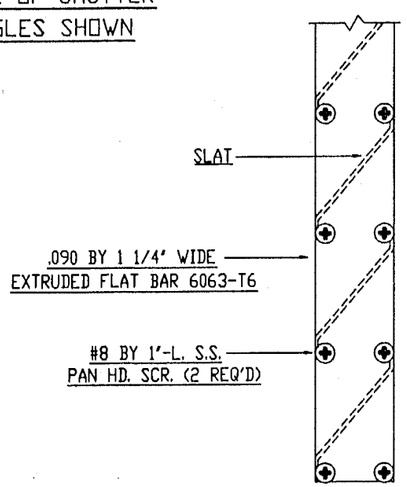

SIDE VIEW

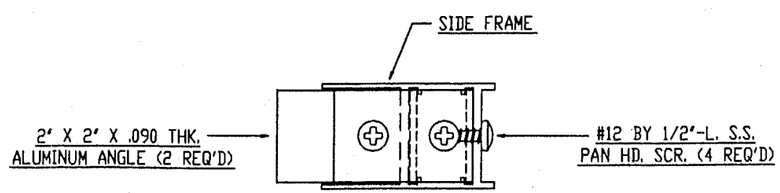

PLAN VIEW

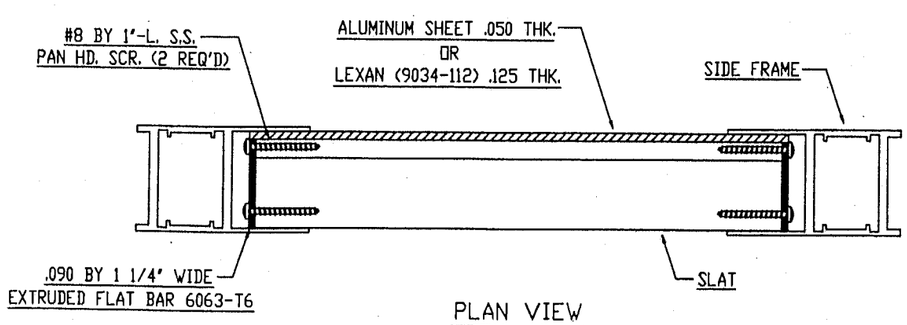

PLAN VIEW

American Consulting Engineers Council Member
Supporting Excellence in Engineering

JENKINS & CHARLAND
30079 N.W. 53rd Street
FORT LAUDERDALE, FL 33609
(305) 484-7777

TO THE BEST OF MY KNOWLEDGE AND ABILITY, THE COMPLETED STRUCTURE DEPICTED ON THESE PLANS COMPLIES WITH THE APPLICABLE MINIMUM BUILDING CODES.

PROF. ENGINEER
GENE S. SANDERS
FLA. PE # 26590
4/10/97

APPROVED AS COMPLYING WITH THE SOUTH FLORIDA BUILDING CODE
DATE MAY 1 1997
BY Helmy A. Mak
PRODUCT CONTROL DIVISION
BUILDING CODE COMPLIANCE OFFICE
ACCEPTANCE NO. 96-0703.02

BERNARDO SHUTTER CORPORATION
POMPANO BEACH, FLORIDA 33060

SCALE:	DRAWING NUMBER	DRAWN BY: VICKERY
DATE: 4-25-96	96-100	REVISED 12-10-96

COLONIAL SHUTTER ASSEMBLY

PAGE NUMBER 4 OF 5

COMPONENTS

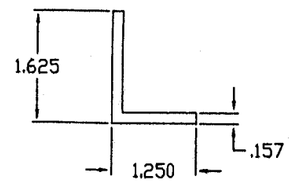

STORM BAR BRACKET
1 1/4" X 1 5/8" X 4 1/4" X .157 THK.
MATERIAL: ALUM. ALLOY-6063-T6

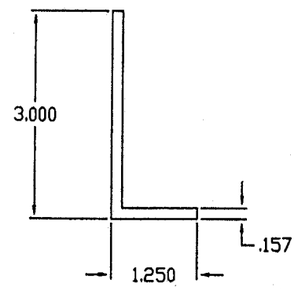

STORM BAR BRACKET
1 1/4" X 3" X 4 1/4" X .157 THK.
MATERIAL: ALUM. ALLOY-6063-T6

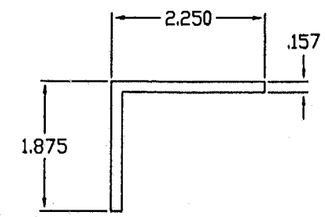

STORM BAR WALL BRACKET
1 7/8" X 2 1/4" X 4 1/4" X .157 THK.
MATERIAL: ALUM. ALLOY-6063-T6

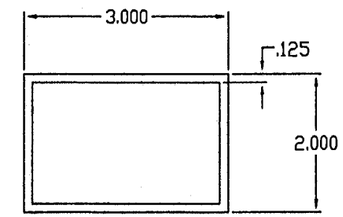

RETANGULAR TUBE
2" X 3" X .125 THK.
MATERIAL: ALUM. ALLOY-6063-T6

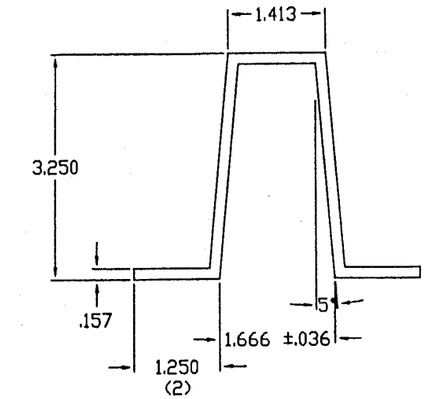

STORM BAR (2 OR 4 PANEL)
MATERIAL: ALUM. ALLOY-6061-T6

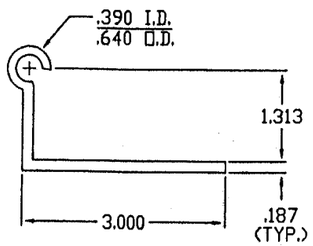

3 1/4" LONG WALL HINGE
(2 PANEL)
MATERIAL: ALUM. ALLOY-6063-T6

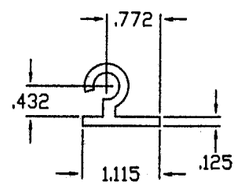

2 1/2" LONG PANEL TO WALL HINGE
(2 PANEL)
MATERIAL: ALUM. ALLOY-6063-T6

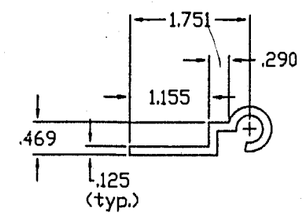

2 1/2" LONG PANEL TO WALL HINGE
(4 PANEL)
MATERIAL: ALUM. ALLOY-6063-T6

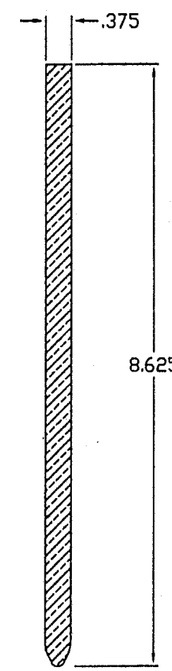

HINGE PIN
ALUM. ALLOY-6063-T5

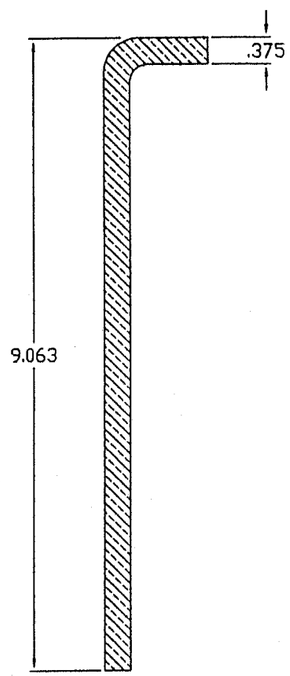

REMOVABLE HINGE PIN
ALUM. ALLOY-6063-T5

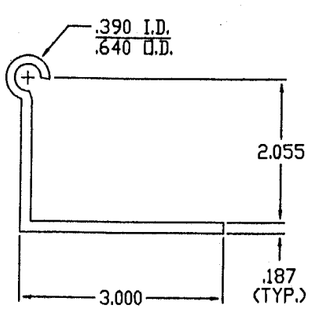

3 1/4" LONG WALL HINGE
(4 PANEL)
MATERIAL: ALUM. ALLOY-6063-T6

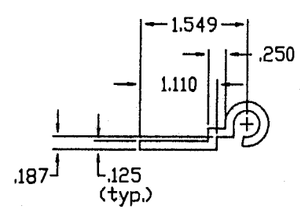

2 1/2" LONG PANEL TO PANEL HINGE
MATERIAL: ALUM. ALLOY-6063-T6

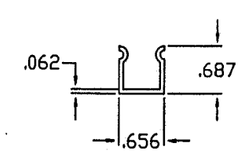

TIE BACK
MATERIAL: ALUM. ALLOY-6063-T6

PRODUCT RENEWED
ACCEPTANCE No. 00-0307.05
EXPIRATION DATE May 01, 2003
By Helmy H. Mekhail
PRODUCT CONTROL DIVISION
BUILDING CODE COMPLIANCE OFFICE

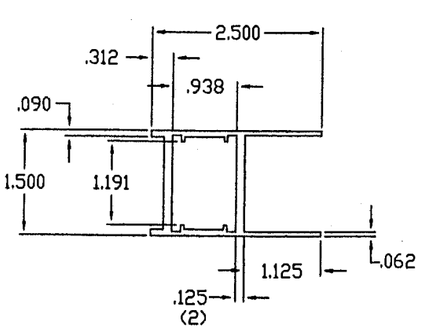

SIDE TRACK
MATERIAL: ALUM. ALLOY-6063-T6

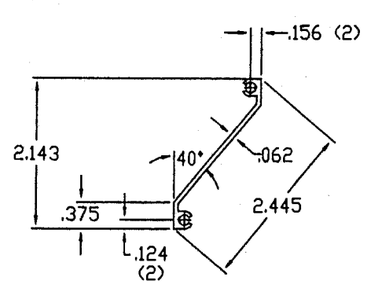

SLAT
MATERIAL: ALUM. ALLOY-6063-T6

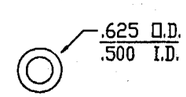

PANEL WASHER .060 THK.
MATERIAL: NYLON

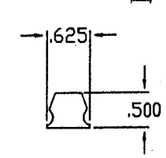

TIE BACK (CLAMP)
MATERIAL: PLASTIC

American Consulting Engineers Council Member
Supporting Excellence in Engineering

JENKINS & CHARLAND
2609 N.W. 33rd Street
FORT LAUDERDALE, FL. 33311
(305) 484-7777

"TO THE BEST OF MY KNOWLEDGE AND ABILITY, THE COMPLETED STRUCTURE REFLECTED ON THESE PLANS COMPLIES WITH THE APPLICABLE FLORIDA BUILDING CODES."

PROF. ENGINEER
GENE S. SANDERS
FLA. PE # 26590
4/10/97

APPROVED AS COMPLYING WITH THE SOUTH FLORIDA BUILDING CODE
DATE MAY 1 1997
BY Helmy H. Mekhail
PRODUCT CONTROL DIVISION
BUILDING CODE COMPLIANCE OFFICE
ACCEPTANCE NO. 96-0703.02

BERNARDO SHUTTER CORPORATION
POMPANO BEACH, FLORIDA 33060

SCALE	DRAWING NUMBER	DRAWN BY: VICKERY
DATE: 4-25-96	96-100	REVISED: 12-10-96

COLONIAL SHUTTER COMPONENTS

PAGE NUMBER 5 OF 5