MIAMI-DADE

MIAMI-DADE COUNTY, FLORIDA
METRO-DADE FLAGLER BUILDING

BUILDING CODE COMPLIANCE OFFICE
METRO-DADE FLAGLER BUILDING
140 WEST FLAGLER STREET, SUITE 1603
MIAMI, FLORIDA 33130-1563
(305) 375-2901 FAX (305) 375-2908

CONTRACTOR LICENSING SECTION
(305) 375-2527 FAX (305) 375-2558

CONTRACTOR ENFORCEMENT DIVISION
(305) 375-2966 FAX (305) 375-2908

PRODUCT CONTROL DIVISION
(305) 375-2902 FAX (305) 372-6339

PRODUCT CONTROL NOTICE OF ACCEPTANCE

YKK AP America Inc.
5630 Gwaltney Dr.
Atlanta ,GA 30336

Your application for Notice of Acceptance (NOA) of:
"YHS-50" Flush Glazed Storefont System-Impact
under Chapter 8 of the Code of Miami-Dade County governing the use of Alternate Materials and Types of Construction, and completely described herein, has been recommended for acceptance by the Miami-Dade County Building Code Compliance Office (BCCO) under the conditions specified herein.

This NOA shall not be valid after the expiration date stated below. BCCO reserves the right to secure this product or material at any time from a jobsite or manufacturer's plant for quality control testing. If this product or material fails to perform in the approved manner, BCCO may revoke, modify, or suspend the use of such product or material immediately. BCCO reserves the right to revoke this approval, if it is determined by BCCO that this product or material fails to meet the requirements of the South Florida Building Code.

The expense of such testing will be incurred by the manufacturer.

ACCEPTANCE NO.: 00-0315.02
EXPIRES: 09/05/2002

Raul Rodriguez
Chief Product Control Division

THIS IS THE COVERSHEET, SEE ADDITIONAL PAGES FOR SPECIFIC AND GENERAL CONDITIONS
BUILDING CODE & PRODUCT REVIEW COMMITTEE

This application for Product Approval has been reviewed by the BCCO and approved by the Building Code and Product Review Committee to be used in Miami-Dade County, Florida under the conditions set forth above.

Francisco J. Quintana, R.A.
Director
Miami-Dade County
Building Code Compliance Office

APPROVED: 10/26/2000

YKK AP AMERICA

ACCEPTANCE No.: **00-0315.02**

APPROVED : OCT 2 6 2000

EXPIRES : **September 05, 2002**

NOTICE OF ACCEPTANCE: SPECIFIC CONDITIONS

1. SCOPE

1.1 This **revises** the Notice of Acceptance No. **99-0713.04**, which was issued on September 30, 1999. It approves an aluminum flush glazed storefront system, as described in Section 2 of this Notice of Acceptance, designed to comply with the South Florida Building Code (SFBC), 1994 Edition for Miami-Dade County, for the locations where the pressure requirements, as determined by SFBC Chapter 23, do not exceed the Design Pressure Rating values indicated in the approved drawings.

2. PRODUCT DESCRIPTION

2.1 The **Series YHS-50 Flush Glazed Aluminum Storefront System -Large Missile Impact Resistant** and its components shall be constructed in strict compliance with the following documents: Drawing No **YHS-50** titled "YHS-50 hurricane storefront " Sheets 1 through 14 of 14 prepared by manufacturer, dated 03/24/99 and last revised on 09-12-00, signed and sealed by C.A. Williams, P. E. , bearing the Miami-Dade County Product Control approval stamp with the Notice of Acceptance number and approval date by the Miami-Dade County Product Control Division. These documents shall hereinafter be referred to as the approved drawings.

3. LIMITATIONS

3.1 This approval applies to multiple unit applications of an aluminum storefront system, limited only to the maximum height (span) and mullion spacing; for the Design Pressure Rating shown in approved drawing.

4. INSTALLATION

4.1 The aluminum storefront system and its components shall be installed in strict compliance with the approved drawings.

4.2 Hurricane protection system (shutters): the installation of this unit **will not require** a hurricane protection system.

5. LABELING

5.1 Each unit shall bear a permanent label with the manufacturer's name or logo, city, state and following statement: "Miami-Dade County Product Control Approved".

6. BUILDING PERMIT REQUIREMENTS

6.1 Application for building permit shall be accompanied by copies of the following:

- **6.1.1** This Notice of Acceptance
- **6.1.2** The Notice of Acceptance of series 35H storefront door, applicable to this storefront system.
- **6.1.3** Duplicate copies of the approved drawings, as identified in Section 2 of this Notice of Acceptance, clearly marked to show the components selected for the proposed installation.
- **6.1.4** Any other documents required by the Building Official or the South Florida Building Code (SFBC) in order to properly evaluate the installation of this system.

Ishaq I. Chanda

Ishaq I. Chanda, P.E. Product Control Examiner
Product Control Division

YKK AP AMERICA

ACCEPTANCE No.: 00-0315.02

APPROVED : OCT 2 6 2000

EXPIRES : September 05, 2002

NOTICE OF ACCEPTANCE: STANDARD CONDITIONS

1. Renewal of this Acceptance (approval) shall be considered after a renewal application has been filed and the original submitted documentation, including test supporting data, engineering documents, are no older than eight (8) years.

2. Any and all approved products shall be permanently labeled with the manufacturer's name, city, state, and the following statement: "Miami-Dade County Product Control Approved", or as specifically stated in the specific conditions of this Acceptance.

3. Renewals of Acceptance will not be considered if:
   a) There has been a change in the South Florida Building Code affecting the evaluation of this product and the product is not in compliance with the code changes;
   b) The product is no longer the same product (identical) as the one originally approved;
   c) If the Acceptance holder has not complied with all the requirements of this acceptance, including the correct installation of the product;
   d) The engineer who originally prepared, signed and sealed the required documentation initially submitted is no longer practicing the engineering profession.

4. Any revision or change in the materials, use, and/or manufacture of the product or process shall automatically be cause for termination of this Acceptance, unless prior written approval has been requested (through the filing of a revision application with appropriate fee) and granted by this office.

5. Any of the following shall also be grounds for removal of this Acceptance:
   a) Unsatisfactory performance of this product or process.
   b) Misuse of this Acceptance as an endorsement of any product, for sales, advertising or any other purpose.

6. The Notice of Acceptance number preceded by the words Miami-Dade County, Florida, and followed by the expiration date may be displayed in advertising literature. If any portion of the Notice of Acceptance is displayed, then it shall be done in its entirety.

7. A copy of this Acceptance as well as approved drawings and other documents, where it applies, shall be provided to the user by the manufacturer or its distributors and shall be available for inspection at the job site at all time. The engineer need not reseal the copies.

8. Failure to comply with any section of this Acceptance shall be cause for termination and removal of Acceptance.

9. This Notice of Acceptance consists of pages 1, 2 and this last page 3.

Ishaq I. Chanda

Ishaq I. Chanda, P.E. Product Control Examiner
Product Control Division

END OF THIS ACCEPTANCE

REV.	DESCRIPTION	BY	DATE
C	REVISED FOR ALT GLASS	BCM	11/23/99
D	PER METRO DADE REVIEW	BCM	9/12/00

YHS-50 HURRICANE STOREFRONT

TABLE OF CONTENTS & GENERAL NOTES

INDEX OF DRAWINGS

TYPES	CONTENTS	SHEET #
GENERAL	COVER SHT. & GENERAL NOTES	1
ELEVATIONS & GLASS CHARTS	ELEVATION WITHOUT REINFORCING + GLASS CHARTS	2
	GLASS CHARTS FOR SYSTEM WITHOUT STEEL REINFORCING	3
	ELEVATIONS WITH STEEL REINFORCING	4
	GLASS CHARTS FOR SYSTEM WITH STEEL REINFORCING	5,6
GEN. DETAILS	GLAZING DETAILS	7
DETAILS	TYPICAL DETAILS	8
	DETAILS FOR DOOR JAMBS	9
REINFORCING & ANCHOR DETAILS	ANCHOR DETAILS	10
	STEEL REINFORCING DETAILS	11
	ANCHOR SCHEDULES	12,13
MATERIAL LIST	BILL OF MATERIALS	14

GENERAL NOTES:

△D 1a. DESIGN PRESSURE RATING IS +70 PSF, −90 PSF WITH STEEL REINFORCING AND +50 PSF, −70 PSF WITHOUT REINFORCING (WITH SAF-GLAS GLAZING OPTION).

△D 1b. DESIGN PRESSURE RATING IS +68 PSF, −86.3 PSF WITH STEEL REINFORCING AND +46 PSF, −60 PSF WITHOUT REINFORCING (WITH DUPONT SENTRYGLAS GLAZING OPTION).

2. THESE UNITS MEET THE IMPACT TEST REQUIREMENT PER THE SOUTH FLORIDA BUILDING CODE AND NO SHUTTERS ARE REQUIRED.

△D 3. ALUMINUM ALLOY ON ALL STRUCTURAL MEMBERS SHALL BE 6063-T5 WITH A MINIMUM YIELD STRENGTH OF 23KSI. ALL PRODUCTS WITH THE MARKING "YKK AP AMERICA" AND "DADE COUNTY PRODUCT APPROVED" ARE IN COMPLIANCE WITH THIS SPECIFICATION FOR STRUCTURAL MEMBERS.

4. MAXIMUM GLASS DAYLIGHT OPENING (DLO) SHALL NOT EXCEED 58 1/2" IN WIDTH OR 114 3/8" IN HEIGHT FOR SYSTEMS WITH STEEL REINFORCING, AND 48 1/2" IN WIDTH OR 108 3/8" IN HEIGHT FOR SYSTEMS WITHOUT STEEL REINFORCING. TO DETERMINE GLASS TYPE CONSULT THE GLASS CHARTS LOCATED ON SHEETS 2, 3, 5, & 6 OF THIS DRAWING SET, WHICH ARE BASED ON TABLE 35-E OF THE SOUTH FLORIDA BUILDING CODE. HOWEVER, OTHER CONSIDERATIONS OF THE BUILDING CODE, REGARDING THE USE OF SAFETY GLASS, ETC. SHALL BE APPLIED AS NECESSARY. ALSO, GLASS MANUFACTURERS SHALL BE CONSULTED FOR THEIR RECOMMENDATIONS.

5. SHOP DRAWINGS PREPARED BASED ON THIS APPROVAL AND TAKING INTO ACCOUNT THE SPECIFIC JOB CONDITIONS, SHALL BE SUBMITTED TO THE BUILDING OFFICIAL AS PART OF THE PERMIT DOCUMENTS.

C. A. WILLIAMS
CERTIFICATE NO. 50367
STATE OF FLORIDA
PROFESSIONAL ENGINEER

Charles Williams
10/4/00

APPROVED AS COMPLYING WITH THE SOUTH FLORIDA BUILDING CODE
DATE October 26, 2000
BY Ishaq I. Chanda
PRODUCT CONTROL DIVISION
BUILDING CODE COMPLIANCE OFFICE
ACCEPTANCE NO. 00-0315.02

RESERVED FOR METRO-DADE USE ONLY

YKK AP America
YKK AP AMERICA, INC.
5630 GWALTNEY DRIVE
ATLANTA, GEORGIA 30336

SYSTEM	SCALE
YHS-50 HURRICANE STOREFRONT	NONE

DESCRIPTION: TABLE OF CONTENTS & NOTES

DRAWING NUMBER	REV.
YHS-50	D

APPROVED BY	DRAWN BY	DATE	SHEET NO.
J.I.A.	B.C.M.	3/24/99	1 of 14

G:\SYSDWGS\YHS50\DADE\YHS50D01.DWG

REV.	DESCRIPTION	BY	DATE
C	REVISED FOR ALT GLASS	BCM	11/23/99
D	PER METRO DADE REVIEW	BCM	9/12/00

YHS-50 SYSTEM
WITHOUT STEEL REINFORCING

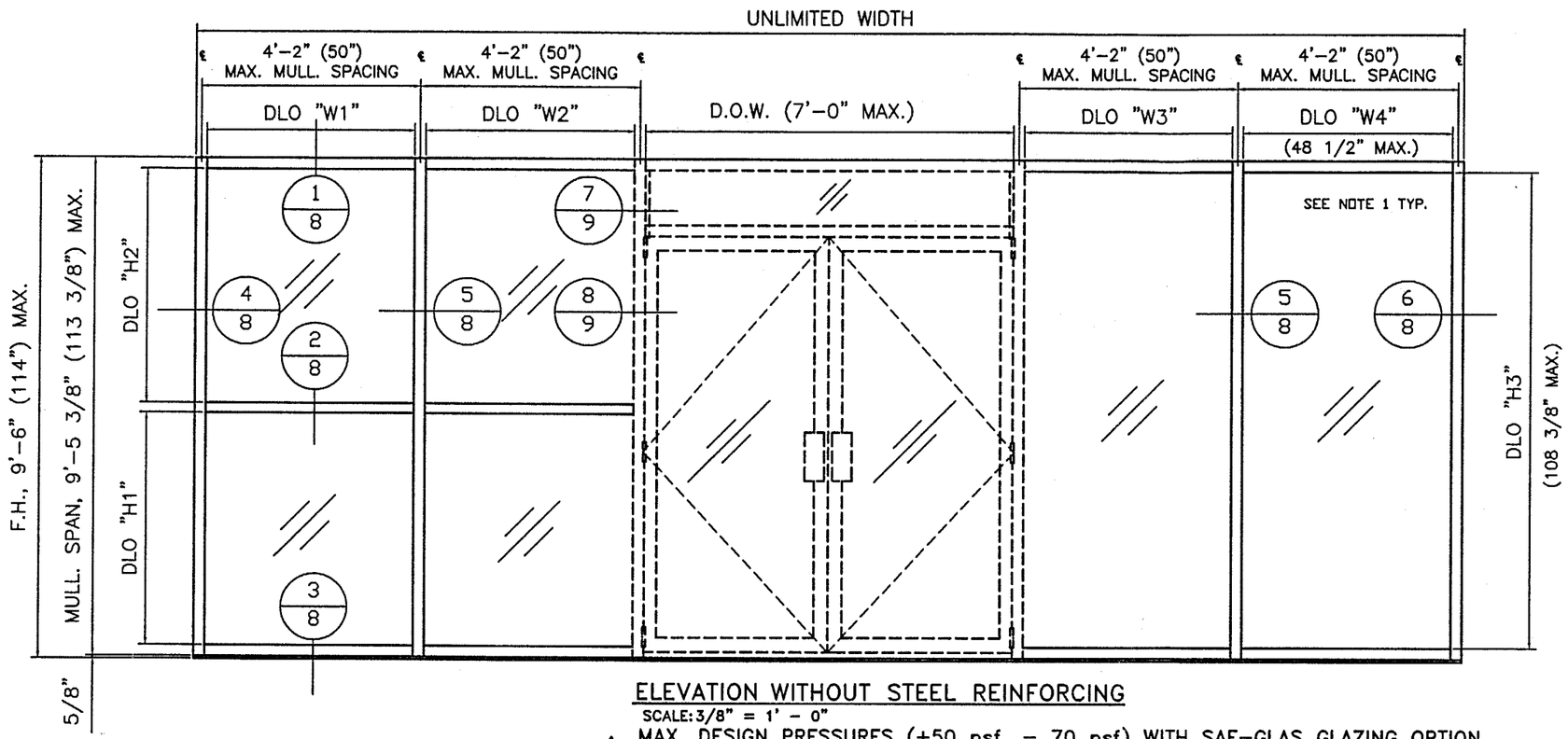

ELEVATION WITHOUT STEEL REINFORCING

SCALE: 3/8" = 1' - 0"

△D MAX. DESIGN PRESSURES (+50 psf, - 70 psf) WITH SAF-GLAS GLAZING OPTION
△D MAX. DESIGN PRESSURES (+46 psf, - 60 psf) WITH SENTRYGLAS GLAZING OPTION

ELEVATION NOTES:

△D 1. THIS SYSTEM IS DESIGNED TO ACCEPT 1/4" GLASS + DUPONT'S SENTRYGLAS COMPOSITE (0.052" THICK), OR 7/16" AND 9/16" SAF-GLAS BY SECURITY ; HEAT TREATMENT AS PER GLASS CHARTS AND TO MEET LOCAL BUILDING CODE REQUIREMENTS.

2. GLASS TO METAL ADHESIVE SHALL BE DOW 995.

3. DOOR DETAILED HEREIN IS:
-YKK MODEL 35H (PER CURRENT METRO-DADE N.O.A.)-
REFER TO SPECIFIC DOCUMENTS ON THIS PRODUCT FOR FURTHER INFORMATION.

4. FOR GLASS TYPES REFER TO GLASS CHARTS ON THIS SHEET AND SHEET 3.

LEGEND:
DLO= DAY LIGHT OPENING
D.O.H.= DOOR OPENING HEIGHT
D.O.W.= DOOR OPENING WIDTH
F.H.= FRAME HEIGHT
MAX.= MAXIMUM

TO USE THESE CHARTS:
1. LOCATE THE APPROPRIATE CHART FOR THE GLASS SPECIFIED ON THE JOB.
2. LOCATE THE COLUMN CORRESPONDING TO THE APPLICABLE DESIGN WIND LOAD PRESSURE.
3. FIND THE ROW CORRESPONDING TO THE MAXIMUM DLO HEIGHT OF A SINGLE LITE (DIM "H") FOR THE GLASS IN CASE.
4. THE INTERSECTION OF THIS ROW AND THE COLUMN FOR THE WIND LOAD INDICATES THE MAXIMUM DLO WIDTH (DIM "W") FOR THE GLASS.
5. EXAMPLE: THE PROPOSED GLASS IS 1/4" ANNEALED GLASS + 0.052" SENTRYGLAS LAMINATE, THE MAXIMUM WINDLOAD PRESSURE IS -50 PSF, AND THE MAXIMUM PROPOSED DLO SIZE IS 36" WIDE AND 60" HIGH. UNDER GLASS CHART #1 FOR THE 1/4" ANNEALED GLASS + 0.052" SENTRYGLAS, LOOK FOR THE INTERSECTION OF THE ROW FOR 60" (DIM "H") AND THE 50 PSF COLUMN. 37" IS THE LARGEST ALLOWABLE DLO WIDTH, WHICH IS GREATER THAN 36", THUS THE GLASS IS ACCEPTABLE FOR THIS APPLICATION.

APPROVED AS COMPLYING WITH THE SOUTH FLORIDA BUILDING CODE
DATE October 26, 2000
BY Ishaq I. Chanda
PRODUCT CONTROL DIVISION
BUILDING CODE COMPLIANCE OFFICE
ACCEPTANCE NO. 00-0315.02

GLASS CHART 1 △D

DLO Height "H" In Inches	Calculated DLO Width "W" at Design Pressures In Inches (max = 48.5)					1/4" Annealed Glass + 0.052" SentryGlas
	40 psf	45 psf	50 psf	55 psf	60 psf	Design Pressures
24	48.5	48.5	48.5	48.5	48.5	
30	48.5	48.5	48.5	48.5	48.5	
36	48.5	48.5	48.5	48.5	48.5	
42	48.5	48.5	48.5	45.6	42.0	
48	48.5	48.5	46.2	39.9	36.8	
54	48.5	43.9	41.1	35.5	32.7	
60	45.4	39.5	37.0	31.9	29.4	
66	41.2	35.9	33.6	29.0	26.7	
72	37.8	32.9	30.8	26.6	24.5	
78	34.9	30.4	28.4	24.6	22.6	
84	32.4	28.2	26.4	22.8	21.0	
90	30.2	26.3	24.6	21.3	19.6	
96	28.4	24.7	23.1	20.0		
102	26.7	23.2	21.7			
108 MAX	25.1	21.9				

GLASS CHART 2 △D

DLO Height "H" In Inches	Calculated DLO Width "W" at Design Pressures In Inches (max = 48.5)					1/4" Heat Str. Glass + 0.052" SentryGlas
	40 psf	45 psf	50 psf	55 psf	60 psf	Design Pressures
24	48.5	48.5	48.5	48.5	48.5	
30	48.5	48.5	48.5	48.5	48.5	
36	48.5	48.5	48.5	48.5	48.5	
42	48.5	48.5	48.5	48.5	48.5	
48	48.5	48.5	48.5	48.5	48.5	
54	48.5	48.5	48.5	48.5	48.5	
60	48.5	48.5	48.5	48.5	48.5	
66	48.5	48.5	48.5	48.5	48.5	
72	48.5	48.5	48.5	48.5	48.3	
78	48.5	48.5	48.5	48.5	44.6	
84	48.5	48.5	48.5	46.8	41.4	
90	48.5	48.5	48.2	43.7	38.6	
96	48.5	47.3	45.2	41.0	36.2	
102	48.5	44.5	42.5	38.5	34.1	
108 MAX	48.5	41.9	40.0	36.4	32.2	

GLASS CHART 3 △D

DLO Height "H" In Inches	Calculated DLO Width "W" at Design Pressures In Inches (max = 48.5)					1/4" Tempered Glass + 0.052" SentryGlas
	40 psf	45 psf	50 psf	55 psf	60 psf	Design Pressures
24	48.5	48.5	48.5	48.5	48.5	
30	48.5	48.5	48.5	48.5	48.5	
36	48.5	48.5	48.5	48.5	48.5	
42	48.5	48.5	48.5	48.5	48.5	
48	48.5	48.5	48.5	48.5	48.5	
54	48.5	48.5	48.5	48.5	48.5	
60	48.5	48.5	48.5	48.5	48.5	
66	48.5	48.5	48.5	48.5	48.5	
72	48.5	48.5	48.5	48.5	48.5	
78	48.5	48.5	48.5	48.5	48.5	
84	48.5	48.5	48.5	48.5	48.5	
90	48.5	48.5	48.5	48.5	48.5	
96	48.5	48.5	48.5	48.5	48.5	
102	48.5	48.5	48.5	48.5	48.5	
108 MAX	48.5	48.5	48.5	48.5	48.5	

C. A. WILLIAMS CERTIFICATE NO. 50367 STATE OF FLORIDA PROFESSIONAL ENGINEER

Charles Williams
10/4/00

△D NOTE 1: THIS CHART APPLIES TO GLASS SIZE ONLY. GLASS CHARTS PRESSURES ABOVE 50 PSF ARE APPLICABLE FOR INTERIOR (NEGATIVE) PRESSURES ONLY, AND EXTERIOR (POSITIVE) PRESSURE MUST NOT EXCEED ABOVE +50 PSF IN ANY CASE.

RESERVED FOR METRO-DADE USE ONLY

YKK AP AMERICA, INC.
5630 GWALTNEY DRIVE
ATLANTA, GEORGIA 30336

SYSTEM	SCALE
YHS-50	AS SHOWN

DESCRIPTION: ELEVATION 1

DRAWING NUMBER	REV.
YHS-50	D

APPROVED BY	DRAWN BY	DATE	SHEET NO.
J.I.A.	B.C.M.	3/24/99	2 of 14

G:\SYSDWGS\YHS50\DADE\YHS50D02.DWG

REV.	DESCRIPTION	BY	DATE
C	REVISED FOR ALT GLASS	BCM	11/23/99
D	PER METRO DADE REVIEW	BCM	9/12/00

△1 WITHOUT STEEL REINFORCING

MAX. DESIGN PRESSURES (+50 psf, – 70 psf) WITH SAF-GLAS GLAZING OPTION
MAX. DESIGN PRESSURES (+46 psf, – 60 psf) WITH SENTRYGLAS GLAZING OPTION

GLASS CHART #4 △1

DLO Height "H" In Inches	Calculated DLO Width "W" at Design Pressures In Inches (max = 48.5)							3/16" Annealed Glass + 0.070 Polycarbonate + 3/16" Annealed Glass
	40 psf	45 psf	50 psf	55 psf	60 psf	65 psf	70 psf	Design Pressures
24	48.5	48.5	48.5	48.5	48.5	48.5	48.5	
30	48.5	48.5	48.5	48.5	48.5	48.5	48.5	
36	48.5	48.5	48.5	48.5	48.5	48.5	48.5	
42	48.5	48.5	48.5	48.5	48.5	48.5	48.5	
48	48.5	48.5	48.5	48.5	48.5	48.5	48.3	
54	48.5	48.5	48.5	48.5	48.5	44.8	42.9	
60	48.5	48.5	48.5	48.5	45.4	40.3	38.6	
66	48.5	48.5	48.1	45.1	41.2	36.7	35.1	
72	48.5	47.6	44.1	41.3	37.	33.6	32.2	
78	48.5	43.9	40.7	38.1	34.9	31.0	29.7	
84	48.5	40.8	37.8	35.4	32.4	28.8	27.6	
90	45.6	38.1	35.3	33.0	30.2	26.9	25.8	
96	42.7	35.7	33.1	31.0	28.4	25.2	24.2	
102	40.2	33.6	31.1	29.2	26.7	23.7	22.7	
108	38.0	31.7	29.4	27.5	25.2	22.4		
114.38 MAX	35.9	30.0	27.8	26.0	23.8			

GLASS CHART #5 △1

DLO Height "H" In Inches	Calculated DLO Width "W" at Design Pressures In Inches (max = 48.5)							¼" Annealed Glass + 0.070 Polycarbonate + ¼" Annealed Glass
	40 psf	45 psf	50 psf	55 psf	60 psf	65 psf	70 psf	Design Pressures
24	48.5	48.5	48.5	48.5	48.5	48.5	48.5	
30	48.5	48.5	48.5	48.5	48.5	48.5	48.5	
36	48.5	48.5	48.5	48.5	48.5	48.5	48.5	
42	48.5	48.5	48.5	48.5	48.5	48.5	48.5	
48	48.5	48.5	48.5	48.5	48.5	48.5	48.5	
54	48.5	48.5	48.5	48.5	48.5	48.5	48.5	
60	48.5	48.5	48.5	48.5	48.5	48.5	48.5	
66	48.5	48.5	48.5	48.5	48.5	48.5	48.5	
72	48.5	48.5	48.5	48.5	48.5	47.6	46.2	
78	48.5	48.5	48.5	48.5	48.5	43.9	42.6	
84	48.5	48.5	48.5	48.5	46.8	40.8	39.6	
90	48.5	48.5	48.5	47.0	43.7	38.1	37.0	
96	48.5	48.5	48.5	44.1	41.0	35.7	34.7	
102	48.5	48.5	47.4	41.5	38.5	33.6	32.6	
108	48.5	48.5	44.8	39.2	36.4	31.7	30.8	
114.38 MAX	48.5	45.8	42.3	37.0	34.4	30.0	29.1	

GLASS CHART #6 △1

DLO Height "H" In Inches	Calculated DLO Width "W" at Design Pressures In Inches (max = 48.5)							3/16" Heat Str. Glass + 0.070 Polycarbonate + 3/16" Heat Str. Glass
	40 psf	45 psf	50 psf	55 psf	60 psf	65 psf	70 psf	Design Pressures
24	48.5	48.5	48.5	48.5	48.5	48.5	48.5	
30	48.5	48.5	48.5	48.5	48.5	48.5	48.5	
36	48.5	48.5	48.5	48.5	48.5	48.5	48.5	
42	48.5	48.5	48.5	48.5	48.5	48.5	48.5	
48	48.5	48.5	48.5	48.5	48.5	48.5	48.5	
54	48.5	48.5	48.5	48.5	48.5	48.5	48.5	
60	48.5	48.5	48.5	48.5	48.5	48.5	48.5	
66	48.5	48.5	48.5	48.5	48.5	48.5	48.5	
72	48.5	48.5	48.5	48.5	48.5	48.5	48.5	
78	48.5	48.5	48.5	48.5	48.5	48.5	48.5	
84	48.5	48.5	48.5	48.5	48.5	48.5	48.5	
90	48.5	48.5	48.5	48.5	48.5	48.5	48.5	
96	48.5	48.5	48.5	48.5	48.5	48.5	48.5	
102	48.5	48.5	48.5	48.5	48.5	48.5	47.4	
108	48.5	48.5	48.5	48.5	48.5	46.7	44.8	
114.38 MAX	48.5	48.5	48.5	48.5	48.5	44.1	42.3	

GLASS CHART #7 △1

DLO Height "H" In Inches	Calculated DLO Width "W" at Design Pressures In Inches (max = 48.5)							¼" Heat Str. Glass + 0.070 Polycarbonate + ¼" Heat Str. Glass
	40 psf	45 psf	50 psf	55 psf	60 psf	65 psf	70 psf	Design Pressures
24	48.5	48.5	48.5	48.5	48.5	48.5	48.5	
30	48.5	48.5	48.5	48.5	48.5	48.5	48.5	
36	48.5	48.5	48.5	48.5	48.5	48.5	48.5	
42	48.5	48.5	48.5	48.5	48.5	48.5	48.5	
48	48.5	48.5	48.5	48.5	48.5	48.5	48.5	
54	48.5	48.5	48.5	48.5	48.5	48.5	48.5	
60	48.5	48.5	48.5	48.5	48.5	48.5	48.5	
66	48.5	48.5	48.5	48.5	48.5	48.5	48.5	
72	48.5	48.5	48.5	48.5	48.5	48.5	48.5	
78	48.5	48.5	48.5	48.5	48.5	48.5	48.5	
84	48.5	48.5	48.5	48.5	48.5	48.5	48.5	
90	48.5	48.5	48.5	48.5	48.5	48.5	48.5	
96	48.5	48.5	48.5	48.5	48.5	48.5	48.5	
102	48.5	48.5	48.5	48.5	48.5	48.5	48.5	
108	48.5	48.5	48.5	48.5	48.5	48.5	48.5	
114.38 MAX	48.5	48.5	48.5	48.5	48.5	48.5	48.5	

△1 NOTE 1: THIS CHART APPLIES TO GLASS SIZE ONLY. GLASS CHARTS PRESSURES ABOVE 50 PSF ARE APPLICABLE FOR INTERIOR (NEGATIVE) PRESSURES ONLY, AND EXTERIOR (POSITIVE) PRESSURE MUST NOT EXCEED ABOVE +50 PSF IN ANY CASE.

△2

TO USE THESE CHARTS:

1. LOCATE THE APPROPRIATE CHART FOR THE GLASS SPECIFIED ON THE JOB.
2. LOCATE THE COLUMN CORRESPONDING TO THE APPLICABLE DESIGN WIND LOAD PRESSURE.
3. FIND THE ROW CORRESPONDING TO THE MAXIMUM DLO HEIGHT OF A SINGLE LITE (DIM "H") FOR THE GLASS IN CASE.
4. THE INTERSECTION OF THIS ROW AND THE COLUMN FOR THE WIND LOAD INDICATES THE MAXIMUM DLO WIDTH (DIM "W") FOR THE GLASS.
5. EXAMPLE: THE PROPOSED GLASS IS 3/16" ANNEALED GLASS + 0.070 POLYCARBONATE + 3/16" ANNEALED GLASS, THE MAXIMUM WINDLOAD PRESSURE IS –55 PSF, AND THE MAXIMUM PROPOSED DLO SIZE IS 30" WIDE AND 90" HIGH. UNDER GLASS CHART #4 FOR THE 3/16" ANNEALED GLASS + 0.070" POLYCARBONATE + 3/16" ANNEALED GLASS, LOOK FOR THE INTERSECTION OF THE ROW FOR 90" (DIM "H") AND THE 55 PSF COLUMN. 33" IS THE LARGEST ALLOWABLE DLO WIDTH, WHICH IS GREATER THAN 30", THUS THE GLASS IS ACCEPTABLE FOR THIS APPLICATION.

C. A. WILLIAMS CERTIFICATE NO. 50367 STATE OF FLORIDA PROFESSIONAL ENGINEER

Charles A. Williams
10/4/00

APPROVED AS COMPLYING WITH THE SOUTH FLORIDA BUILDING CODE
DATE October 26, 2000
BY Ishaq I. Chanda
PRODUCT CONTROL DIVISION
BUILDING CODE COMPLIANCE OFFICE
ACCEPTANCE NO. 00-0315.02

RESERVED FOR METRO-DADE USE ONLY

YKK AP America
YKK AP AMERICA, INC.
5630 GWALTNEY DRIVE
ATLANTA, GEORGIA 30336

SYSTEM	SCALE
YHS-50	NONE

DESCRIPTION: GLASS CHART FOR ELEVATION 2

DRAWING NUMBER	REV.
YHS-50	D

APPROVED BY	DRAWN BY	DATE	SHEET NO.
J.I.A.	B.C.M.	3/24/99	3 of 14

G:\SYSDWGS\YHS-50\DADE\YHS50D03.DWG

REV.	DESCRIPTION	BY	DATE
C	REVISED FOR ALT GLASS	BCM	11/23/99
D	PER METRO DADE REVIEW	BCM	9/12/00

YHS-50 SYSTEM
WITH STEEL REINFORCING

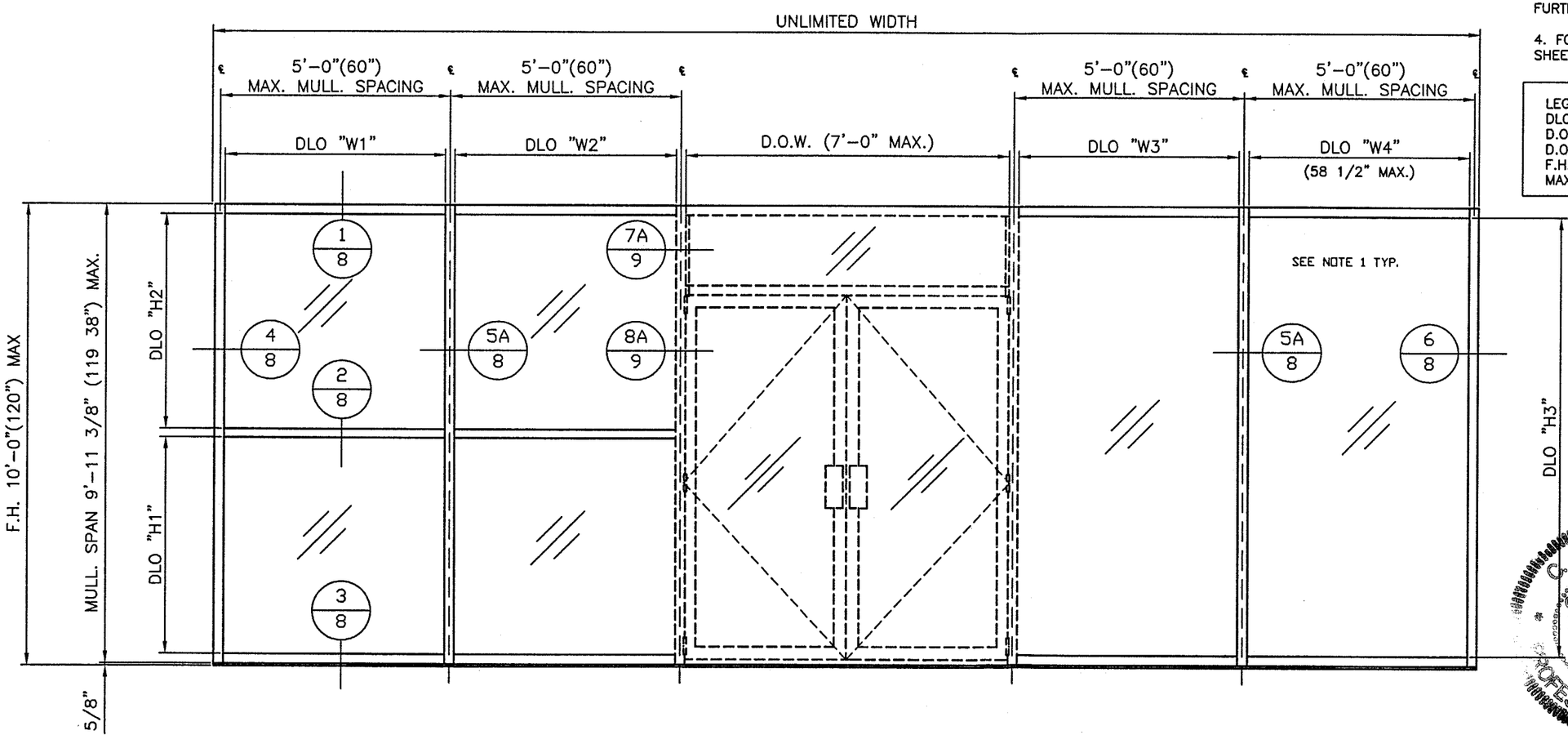

ELEVATION WITH STEEL REINFORCING

SCALE: 3/8" = 1' - 0"

MAX. DESIGN PRESSURES (+70 psf, - 90 psf) WITH SAF-GLAS GLAZING OPTION
MAX. DESIGN PRESSURES (+68 psf, - 86.3 psf) WITH SENTRYGLAS GLAZING OPTION

ELEVATION NOTES:

1. THIS SYSTEM IS DESIGNED TO ACCEPT 1/4" OR 3/8" GLASS + DUPONT'S SENTRYGLAS COMPOSITE (0.052" THICK) OR 7/16' OR 9/16" SAF-GLAS BY SECURITY; HEAT TREATMENT AS PER CHARTS ON SHEET 5 AND 6 AND TO MEET LOCAL BUILDING CODE REQUIREMENTS.

2. GLASS TO METAL ADHESIVE SHALL BE DOW 995.

3. DOOR DETAILED HEREIN IS:
   DOOR; YKK MODEL 35H (PER CURRENT METRO-DADE N.O.A.)
REFER TO SPECIFIC DOCUMENTS ON THIS PRODUCT FOR FURTHER INFORMATION.

4. FOR GLASS TYPE REFER TO GLASS CHARTS ON SHEETS 5 AND 6.

LEGEND:
DLO= DAY LIGHT OPENING
D.O.H.= DOOR OPENING HEIGHT
D.O.W.= DOOR OPENING WIDTH
F.H.= FRAME HEIGHT
MAX.= MAXIMUM

C. A. WILLIAMS CERTIFICATE NO. 50367 STATE OF FLORIDA PROFESSIONAL ENGINEER

APPROVED AS COMPLYING WITH THE SOUTH FLORIDA BUILDING CODE
DATE October 26, 2000
BY Ishwar I. Chanda
PRODUCT CONTROL DIVISION
BUILDING CODE COMPLIANCE OFFICE
ACCEPTANCE NO. 00-0315.02

Charles Williams 10/4/00

RESERVED FOR METRO-DADE USE ONLY

YKK AP America
YKK AP AMERICA, INC.
5630 GWALTNEY DRIVE
ATLANTA, GEORGIA 30336

SYSTEM	SCALE
YHS-50	AS SHOWN
DESCRIPTION: ELEVATION 2	
DRAWING NUMBER: YHS-50	REV. D

APPROVED BY	DRAWN BY	DATE	SHEET NO.
J.I.A.	B.C.M.	3/24/99	4 of 14

G:\SYSDWGS\YHS50\DADE\YHS50D04.DWG

REV.	DESCRIPTION	BY	DATE
C	REVISED FOR ALT GLASS	BCM	11/23/99
D	PER METRO DADE REVIEW	BCM	9/12/00

△1 WITH STEEL REINFORCING

MAX. DESIGN PRESSURES (+68 psf, – 86.3 psf) WITH SENTRYGLAS GLAZING OPTION

GLASS CHART #8 △1

DLO Height "H" In Inches	Calculated DLO Width "W" at Design Pressures In Inches (max = 58.5)								¼" Annealed Glass + 0.052" SentryGlas
	50 psf	55 psf	60 psf	65 psf	70 psf	75 psf	80 psf	86.3 psf	Design Pressures
24	58.5	58.5	58.5	58.5	58.5	58.5	54.6	53.8	
30	58.5	58.5	58.5	53.8	50.4	47.0	43.7	43.0	
36	58.5	53.2	49.0	44.8	42.0	39.2	36.4	35.8	
42	52.8	45.6	42.0	38.4	36.0	33.6	31.2	30.7	
48	46.2	39.9	36.8	33.6	31.5	29.4	27.3	26.9	
54	41.1	35.5	32.7	29.9	28.0	26.1	24.6	23.9	
60	37.0	31.9	29.4	26.9	25.2	23.5	21.8	21.5	
66	33.6	29.0	26.7	24.4	22.9	21.4	19.9	19.5	
72	30.8	26.6	24.5	22.4	21.0	19.6	18.2	17.9	
78	28.4	24.6	22.6	20.7	19.4	18.1	16.8	16.5	
84	26.4	22.8	21.0	19.2	18.0	16.8			
90	24.6	21.3	19.6						
96	23.1	20.0							
102	21.7								
108									
114.38 MAX									

GLASS CHART #9 △1

DLO Height "H" In Inches	Calculated DLO Width "W" at Design Pressures In Inches (max = 58.5)								¼" Heat Str. Glass + 0.052" SentryGlas
	50 psf	55 psf	60 psf	65 psf	70 psf	75 psf	80 psf	86.3 psf	Design Pressures
24	58.5	58.5	58.5	58.5	58.5	58.5	58.5	58.5	
30	58.5	58.5	58.5	58.5	58.5	58.5	58.5	58.5	
36	58.5	58.5	58.5	58.5	58.5	58.5	58.5	58.5	
42	58.5	58.5	58.5	58.5	58.5	58.5	58.5	58.5	
48	58.5	58.5	58.5	58.5	58.5	58.5	56.7	52.5	
54	58.5	58.5	58.5	58.5	56.0	52.3	50.4	46.7	
60	58.5	58.5	58.0	53.8	50.4	47.0	45.4	42.0	
66	58.5	58.5	52.7	48.9	45.8	42.8	41.2	38.2	
72	58.5	54.6	48.3	44.8	42.0	39.2	37.8	35.0	
78	58.5	50.4	44.6	41.4	38.8	36.2	34.9	32.3	
84	55.6	46.8	41.4	38.4	36.0	33.6	32.4	30.0	
90	41.6	43.7	38.6	35.8	33.6	31.4	30.2	28.0	
96	48.2	41.0	36.2	33.6	31.5	29.4	28.4	26.3	
102	42.5	38.5	34.1	31.6	29.6	27.7	26.7	24.7	
108	40.1	36.4	32.2	29.9	28.0	26.1	25.2	23.3	
114.38 MAX	37.9	34.4	30.4	28.2	26.4	24.7	23.8		

GLASS CHART #10 △1

DLO Height "H" In Inches	Calculated DLO Width "W" at Design Pressures In Inches (max = 58.5)								¼" Tempered Glass + 0.052" SentryGlas
	50 psf	55 psf	60 psf	65 psf	70 psf	75 psf	80 psf	86.3 psf	Design Pressures
24	58.5	58.5	58.5	58.5	58.5	58.5	58.5	58.5	
30	58.5	58.5	58.5	58.5	58.5	58.5	58.5	58.5	
36	58.5	58.5	58.5	58.5	58.5	58.5	58.5	58.5	
42	58.5	58.5	58.5	58.5	58.5	58.5	58.5	58.5	
48	58.5	58.5	58.5	58.5	58.5	58.5	58.5	58.5	
54	58.5	58.5	58.5	58.5	58.5	58.5	58.5	58.5	
60	58.5	58.5	58.5	58.5	58.5	58.5	58.5	58.5	
66	58.5	58.5	58.5	58.5	58.5	58.5	58.5	58.5	
72	58.5	58.5	58.5	58.5	58.5	58.5	58.5	58.5	
78	58.5	58.5	58.5	58.5	58.5	58.5	58.5	58.5	
84	58.5	58.5	58.5	58.5	58.5	58.5	58.5	58.5	
90	58.5	58.5	58.5	58.5	58.5	58.5	58.5	56.0	
96	58.5	58.5	58.5	58.5	58.5	58.5	56.7	52.5	
102	58.5	58.5	58.5	58.5	58.5	58.3	53.4	49.4	
108	58.5	58.5	58.5	58.5	56.9	55.1	50.4	46.7	
114.38 MAX	58.5	58.5	58.5	58.5	53.8	52.0	47.6	44.1	

GLASS CHART #11 △1

DLO Height "H" In Inches	Calculated DLO Width "W" at Design Pressures In Inches (max = 58.5)								3/8" Tempered Glass + 0.052" SentryGlas
	50 psf	55 psf	60 psf	65 psf	70 psf	75 psf	80 psf	86.3 psf	Design Pressures
24	58.5	58.5	58.5	58.5	58.5	58.5	58.5	58.5	
30	58.5	58.5	58.5	58.5	58.5	58.5	58.5	58.5	
36	58.5	58.5	58.5	58.5	58.5	58.5	58.5	58.5	
42	58.5	58.5	58.5	58.5	58.5	58.5	58.5	58.5	
48	58.5	58.5	58.5	58.5	58.5	58.5	58.5	58.5	
54	58.5	58.5	58.5	58.5	58.5	58.5	58.5	58.5	
60	58.5	58.5	58.5	58.5	58.5	58.5	58.5	58.5	
66	58.5	58.5	58.5	58.5	58.5	58.5	58.5	58.5	
72	58.5	58.5	58.5	58.5	58.5	58.5	58.5	58.5	
78	58.5	58.5	58.5	58.5	58.5	58.5	58.5	58.5	
84	58.5	58.5	58.5	58.5	58.5	58.5	58.5	58.5	
90	58.5	58.5	58.5	58.5	58.5	58.5	58.5	58.5	
96	58.5	58.5	58.5	58.5	58.5	58.5	58.5	58.5	
102	58.5	58.5	58.5	58.5	58.5	58.5	58.5	58.5	
108	58.5	58.5	58.5	58.5	58.5	58.5	58.5	58.5	
114.38 MAX	58.5	58.5	58.5	58.5	58.5	58.5	58.5	58.5	

△1 NOTE 1: THIS CHART APPLIES TO GLASS SIZE ONLY. GLASS CHARTS PRESSURES ABOVE 70 PSF ARE APPLICABLE FOR INTERIOR (NEGATIVE) PRESSURES ONLY, AND EXTERIOR (POSITIVE) PRESSURE MUST NOT EXCEED ABOVE +70 PSF IN ANY CASE.

TO USE THESE CHARTS:

1. LOCATE THE APPROPRIATE CHART FOR THE GLASS SPECIFIED ON THE JOB.
2. LOCATE THE COLUMN CORRESPONDING TO THE APPLICABLE DESIGN WIND LOAD PRESSURE.
3. FIND THE ROW CORRESPONDING TO THE MAXIMUM DLO HEIGHT OF A SINGLE LITE (DIM "H") FOR THE GLASS IN CASE.
4. THE INTERSECTION OF THIS ROW AND THE COLUMN FOR THE WIND LOAD INDICATES THE MAXIMUM DLO WIDTH (DIM "W") FOR THE GLASS.
5. EXAMPLE: THE PROPOSED GLASS IS 1/4" HEAT STRENGTHNED GLASS + 0.052" SENTRYGLAS LAMINATE, THE MAXIMUM WINDLOAD PRESSURE IS –70 PSF, AND THE MAXIMUM PROPOSED DLO SIZE IS 40" WIDE AND 72" HIGH. UNDER GLASS CHART #9 FOR THE 1/4" HEAT STRENGTHENED GLASS + 0.052" SENTRYGLAS, LOOK FOR THE INTERSECTION OF THE ROW FOR 72" (DIM "H") AND THE 70 PSF COLUMN. 42" IS THE LARGEST ALLOWABLE DLO WIDTH, WHICH IS GREATER THAN 40", THUS THE GLASS IS ACCEPTABLE FOR THIS APPLICATION.

C. A. WILLIAMS CERTIFICATE NO. 50367 STATE OF FLORIDA PROFESSIONAL ENGINEER

Charles A. Williams
10/4/00

APPROVED AS COMPLYING WITH THE SOUTH FLORIDA BUILDING CODE
DATE October 26, 2000
BY Ishaq I. Chanda
PRODUCT CONTROL DIVISION
BUILDING CODE COMPLIANCE OFFICE
ACCEPTANCE NO. 00-0315.02

RESERVED FOR METRO-DADE USE ONLY

YKK AP America
YKK AP AMERICA, INC.
5630 GWALTNEY DRIVE
ATLANTA, GEORGIA 30336

SYSTEM	SCALE
YHS-50	NONE

DESCRIPTION: GLASS CHART FOR ELEVATION 2

DRAWING NUMBER	REV.
YHS-50	D

APPROVED BY	DRAWN BY	DATE	SHEET NO.
J.I.A.	B.C.M.	3/24/99	5 of 14

G:\SYSDWGS\YHS-50\DADE\YHS50D05.DWG

REV.	DESCRIPTION	BY	DATE
C	NEW SHEET THIS REVISION	BCM	11/23/99
D	PER METRO DADE REVIEW	BCM	9/12/00

△1 WITH STEEL REINFORCING

MAX. DESIGN PRESSURES (+70 psf, – 90 psf) WITH SAFGLAS GLAZING OPTION

GLASS CHART #12 △1

DLO Height "H" In Inches	Calculated DLO Width "W" at Design Pressures In Inches (max = 58.5)											3/16" Annealed Glass + 0.070 Polycarbonate + 3/16" Annealed Glass
	40 psf	45 psf	50 psf	55 psf	60 psf	65 psf	70 psf	75 psf	80 psf	85 psf	90 psf	Design Pressures
24	58.5	58.5	58.5	58.5	58.5	58.5	58.5	58.5	58.5	58.5	58.5	
30	58.5	58.5	58.5	58.5	58.5	58.5	58.5	58.5	58.5	58.5	57.1	
36	58.5	58.5	58.5	58.5	58.5	58.5	58.5	57.4	50.4	49.0	47.6	
42	58.5	58.5	58.5	58.5	58.5	57.6	55.2	49.2	43.2	42.0	40.8	
48	58.5	58.5	58.5	58.5	56.7	50.4	48.3	43.1	37.8	36.8	35.7	
54	58.5	58.5	58.5	55.1	50.4	44.8	42.9	38.3	33.6	32.7	31.7	
60	58.5	57.1	52.9	49.6	45.4	40.3	38.6	34.4	30.2	29.4	28.6	
66	58.5	51.9	48.1	45.1	41.2	36.7	35.1	31.3	27.5	26.7	26.0	
72	57.0	47.6	44.1	41.3	37.8	33.6	32.2	28.7	25.2	24.5	23.8	
78	52.6	43.9	40.7	38.1	34.9	31.0	29.7	26.5	23.3	22.6	22.0	
84	48.8	40.8	37.8	35.4	32.4	28.8	27.6	24.6	21.6	21.0	20.4	
90	45.6	38.1	35.3	33.0	30.2	26.9	25.8	23.0	20.2	19.6	19.0	
96	42.7	35.7	33.1	31.0	28.4	25.2	24.2	21.5				
102	40.2	33.6	31.1	29.2	26.7	23.7	22.7					
108	38.0	31.7	29.4	27.5	25.2	22.4						
114.38 MAX	35.9	30.0	27.8	26.0	23.8							

GLASS CHART #13 △1

DLO Height "H" In Inches	Calculated DLO Width "W" at Design Pressures In Inches (max = 58.5)											¼" Annealed Glass + 0.070 Polycarbonate + ¼" Annealed Glass
	40 psf	45 psf	50 psf	55 psf	60 psf	65 psf	70 psf	75 psf	80 psf	85 psf	90 psf	Design Pressures
24	58.5	58.5	58.5	58.5	58.5	58.5	58.5	58.5	58.5	58.5	58.5	
30	58.5	58.5	58.5	58.5	58.5	58.5	58.5	58.5	58.5	58.5	58.5	
36	58.5	58.5	58.5	58.5	58.5	58.5	58.5	58.5	58.5	58.5	58.5	
42	58.5	58.5	58.5	58.5	58.5	58.5	58.5	58.5	58.5	58.5	58.5	
48	58.5	58.5	58.5	58.5	58.5	58.5	58.5	58.5	58.5	55.7	54.6	
54	58.5	58.5	58.5	58.5	58.5	58.5	58.5	56.0	52.3	49.5	48.5	
60	58.5	58.5	58.5	58.5	58.5	57.1	55.4	50.4	47.0	44.5	43.7	
66	58.5	58.5	58.5	58.5	58.5	51.9	50.4	45.8	42.8	40.5	39.7	
72	58.5	58.5	58.5	58.5	54.6	47.6	46.2	42.0	39.2	37.1	36.4	
78	58.5	58.5	58.5	54.3	50.4	43.9	42.6	38.8	36.2	34.2	33.6	
84	58.5	58.5	57.6	50.4	46.8	40.8	39.6	36.0	33.6	31.8	31.2	
90	58.5	58.2	53.8	47.0	43.7	38.1	37.0	33.6	31.4	29.7	29.1	
96	58.5	54.6	50.4	44.1	41.0	35.7	34.7	31.5	29.4	27.8	27.3	
102	58.5	51.4	47.4	41.5	38.5	33.6	32.6	29.6	27.7	26.2	25.7	
108	56.5	48.5	44.8	39.2	36.4	31.7	30.8	28.0	26.1	24.7	24.3	
114.38 MAX	53.3	45.8	42.3	37.0	34.4	30.0	29.1	26.4	24.7	23.4	22.9	

GLASS CHART #14 △1

DLO Height "H" In Inches	Calculated DLO Width "W" at Design Pressures In Inches (max = 58.5)											3/16" Heat Str. Glass + 0.070 Polycarbonate + 3/16" Heat Str. Glass
	40 psf	45 psf	50 psf	55 psf	60 psf	65 psf	70 psf	75 psf	80 psf	85 psf	90 psf	Design Pressures
24	58.5	58.5	58.5	58.5	58.5	58.5	58.5	58.5	58.5	58.5	58.5	
30	58.5	58.5	58.5	58.5	58.5	58.5	58.5	58.5	58.5	58.5	58.5	
36	58.5	58.5	58.5	58.5	58.5	58.5	58.5	58.5	58.5	58.5	58.5	
42	58.5	58.5	58.5	58.5	58.5	58.5	58.5	58.5	58.5	58.5	58.5	
48	58.5	58.5	58.5	58.5	58.5	58.5	58.5	58.5	58.5	58.5	58.5	
54	58.5	58.5	58.5	58.5	58.5	58.5	58.5	58.5	58.5	58.5	58.5	
60	58.5	58.5	58.5	58.5	58.5	58.5	58.5	58.5	58.5	58.5	58.5	
66	58.5	58.5	58.5	58.5	58.5	58.5	58.5	58.5	58.5	56.5	53.5	
72	58.5	58.5	58.5	58.5	58.5	58.5	58.5	58.1	56.7	51.8	49.0	
78	58.5	58.5	58.5	58.5	58.5	58.5	58.5	53.6	52.3	47.8	45.2	
84	58.5	58.5	58.5	58.5	58.5	58.5	57.6	49.8	48.6	44.4	42.0	
90	58.5	58.5	58.5	58.5	58.5	56.0	53.8	46.5	45.4	41.4	39.2	
96	58.5	58.5	58.5	58.5	58.5	52.5	50.4	43.6	42.5	38.9	36.8	
102	58.5	58.5	58.5	57.3	55.3	49.4	47.4	41.0	40.0	36.6	34.6	
108	58.5	58.5	58.5	54.1	52.3	46.7	44.8	38.7	37.8	34.5	32.7	
114.38 MAX	58.5	58.5	56.4	51.1	49.4	44.1	42.3	36.6	35.7	32.6	30.8	

GLASS CHART #15 △1

DLO Height "H" In Inches	Calculated DLO Width "W" at Design Pressures In Inches (max = 58.5)											¼" Heat Str. Glass + 0.070 Polycarbonate + ¼" Heat Str. Glass
	40 psf	45 psf	50 psf	55 psf	60 psf	65 psf	70 psf	75 psf	80 psf	85 psf	90 psf	Design Pressures
24	58.5	58.5	58.5	58.5	58.5	58.5	58.5	58.5	58.5	58.5	58.5	
30	58.5	58.5	58.5	58.5	58.5	58.5	58.5	58.5	58.5	58.5	58.5	
36	58.5	58.5	58.5	58.5	58.5	58.5	58.5	58.5	58.5	58.5	58.5	
42	58.5	58.5	58.5	58.5	58.5	58.5	58.5	58.5	58.5	58.5	58.5	
48	58.5	58.5	58.5	58.5	58.5	58.5	58.5	58.5	58.5	58.5	58.5	
54	58.5	58.5	58.5	58.5	58.5	58.5	58.5	58.5	58.5	58.5	58.5	
60	58.5	58.5	58.5	58.5	58.5	58.5	58.5	58.5	58.5	58.5	58.5	
66	58.5	58.5	58.5	58.5	58.5	58.5	58.5	58.5	58.5	58.5	58.5	
72	58.5	58.5	58.5	58.5	58.5	58.5	58.5	58.5	58.5	58.5	58.5	
78	58.5	58.5	58.5	58.5	58.5	58.5	58.5	58.5	58.5	58.5	58.5	
84	58.5	58.5	58.5	58.5	58.5	58.5	58.5	58.5	58.5	58.5	58.5	
90	58.5	58.5	58.5	58.5	58.5	58.5	58.5	58.5	58.5	58.5	57.1	
96	58.5	58.5	58.5	58.5	58.5	58.5	58.5	58.5	58.5	58.5	53.6	
102	58.5	58.5	58.5	58.5	58.5	58.5	58.5	58.5	58.5	57.3	50.4	
108	58.5	58.5	58.5	58.5	58.5	58.5	58.5	56.9	56.0	54.1	47.6	
114.38 MAX	58.5	58.5	58.5	58.5	58.5	58.5	58.5	53.8	52.9	51.1	44.9	

△1 NOTE 1: THIS CHART APPLIES TO GLASS SIZE ONLY. GLASS CHARTS PRESSURES ABOVE 70 PSF ARE APPLICABLE FOR INTERIOR (NEGATIVE) PRESSURES ONLY, AND EXTERIOR (POSITIVE) PRESSURE MUST NOT EXCEED ABOVE +70 PSF IN ANY CASE.

△2

TO USE THESE CHARTS:

1. LOCATE THE APPROPRIATE CHART FOR THE GLASS SPECIFIED ON THE JOB.
2. LOCATE THE COLUMN CORRESPONDING TO THE APPLICABLE DESIGN WIND LOAD PRESSURE.
3. FIND THE ROW CORRESPONDING TO THE MAXIMUM DLO HEIGHT OF A SINGLE LITE (DIM "H") FOR THE GLASS IN CASE.
4. THE INTERSECTION OF THIS ROW AND THE COLUMN FOR THE WIND LOAD INDICATES THE MAXIMUM DLO WIDTH (DIM "W") FOR THE GLASS.
5. EXAMPLE: THE PROPOSED GLASS IS 1/4" ANNEALED GLASS + 0.070 POLYCARBONATE + 1/4" ANNEALED GLASS, THE MAXIMUM WINDLOAD PRESSURE IS –75 PSF, AND THE MAXIMUM PROPOSED DLO SIZE IS 40" WIDE AND 72" HIGH. UNDER GLASS CHART #13 FOR THE 1/4" ANNEALED GLASS + 0.070" POLYCARBONATE + 1/4" ANNEALED GLASS, LOOK FOR THE INTERSECTION OF THE ROW FOR 72" (DIM "H") AND THE 75 PSF COLUMN. 42" IS THE LARGEST ALLOWABLE DLO WIDTH, WHICH IS GREATER THAN 40", THUS THE GLASS IS ACCEPTABLE FOR THIS APPLICATION.

C. A. WILLIAMS CERTIFICATE NO. 50367 STATE OF FLORIDA PROFESSIONAL ENGINEER

Charles Williams
10/4/00

APPROVED AS COMPLYING WITH THE SOUTH FLORIDA BUILDING CODE
DATE October 26, 2000
BY Ishaq I. Shanda
PRODUCT CONTROL DIVISION
BUILDING CODE COMPLIANCE OFFICE
ACCEPTANCE NO. 00-0315.02

RESERVED FOR METRO-DADE USE ONLY

YKK AP America
YKK AP AMERICA, INC.
5430 GWALTNEY DRIVE
ATLANTA, GEORGIA 30336

SYSTEM	SCALE
YHS-50	NONE

DESCRIPTION: GLASS CHART FOR ELEVATION 2

DRAWING NUMBER	REV.
YHS-50	D

APPROVED BY	DRAWN BY	DATE	SHEET NO.
J.I.A.	B.C.M.	11/23/99	6 of 14

G:\SYSDWGS\YHS-50\DADE\YHS50D06.DWG

REV.	DESCRIPTION	BY	DATE
C	REVISED FOR ALT GLASS	BCM	11/23/99
D	PER METRO DADE REVIEW	BCM	9/12/00

INTERIOR

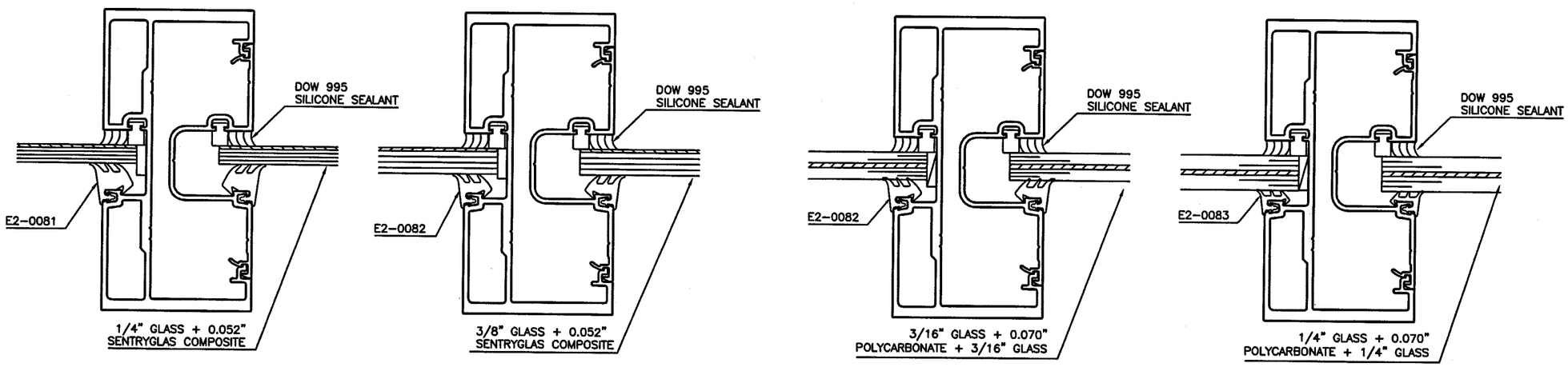

△1 DUPONT SENTRYGLAS GLAZING OPTION

△1 SAF-GLAS BY SECURITY GLAZING OPTION

EXTERIOR

GLAZING OPTIONS

C. A. WILLIAMS CERTIFICATE NO. 50367 STATE OF FLORIDA PROFESSIONAL ENGINEER

Charles Williams
10/4/00

APPROVED AS COMPLYING WITH THE SOUTH FLORIDA BUILDING CODE
DATE October 26, 2000
BY Ishaq I. Shaunds
PRODUCT CONTROL DIVISION
BUILDING CODE COMPLIANCE OFFICE
ACCEPTANCE NO. 00-0315.02

RESERVED FOR METRO-DADE USE ONLY

YKK AP America

YKK AP AMERICA, INC.
5630 GWALTNEY DRIVE
ATLANTA, GEORGIA 30336

SYSTEM	SCALE
YHS-50	1/2

DESCRIPTION: GLAZING DETAILS

DRAWING NUMBER	REV.
YHS-50	D

APPROVED BY	DRAWN BY	DATE	SHEET NO.
J.I.A	B.C.M.	3/24/99	7 of 14

G:\SYSDWGS\YHS50\DADE\YHS50D07.DWG

REV.	DESCRIPTION	BY	DATE
C	REVISED FOR ALT GLASS	BCM	11/23/99
D	PER METRO DADE REVIEW	BCM	9/12/00

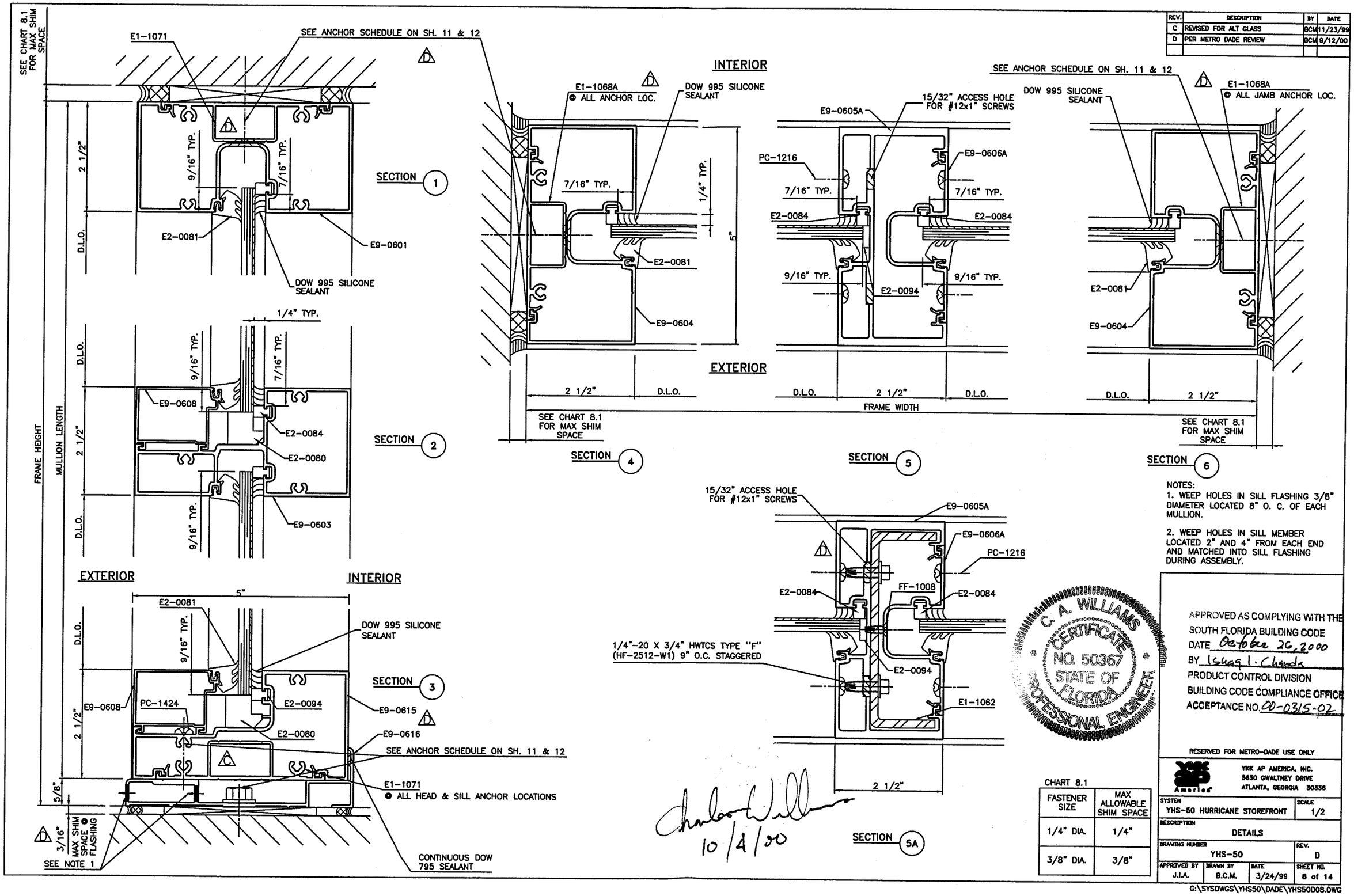

NOTES:
1. WEEP HOLES IN SILL FLASHING 3/8" DIAMETER LOCATED 8" O. C. OF EACH MULLION.

2. WEEP HOLES IN SILL MEMBER LOCATED 2" AND 4" FROM EACH END AND MATCHED INTO SILL FLASHING DURING ASSEMBLY.

C. A. WILLIAMS CERTIFICATE NO. 50367 STATE OF FLORIDA PROFESSIONAL ENGINEER

10/4/00

CHART 8.1

FASTENER SIZE	MAX ALLOWABLE SHIM SPACE
1/4" DIA.	1/4"
3/8" DIA.	3/8"

APPROVED AS COMPLYING WITH THE SOUTH FLORIDA BUILDING CODE
DATE October 26, 2000
BY Ishaq I. Chanda
PRODUCT CONTROL DIVISION
BUILDING CODE COMPLIANCE OFFICE
ACCEPTANCE NO. 00-0315.02

RESERVED FOR METRO-DADE USE ONLY

YKK AP America
YKK AP AMERICA, INC.
5630 GWALTNEY DRIVE
ATLANTA, GEORGIA 30336

SYSTEM	SCALE
YHS-50 HURRICANE STOREFRONT	1/2

DESCRIPTION: DETAILS

DRAWING NUMBER	REV.
YHS-50	D

APPROVED BY	DRAWN BY	DATE	SHEET NO.
J.I.A.	B.C.M.	3/24/99	8 of 14

G:\SYSDWGS\YHS50\DADE\YHS50D08.DWG

REV.	DESCRIPTION	BY	DATE
C	REVISED FOR ALT GLASS	BCM	11/23/99
D	PER METRO DADE REVIEW	BCM	9/12/00

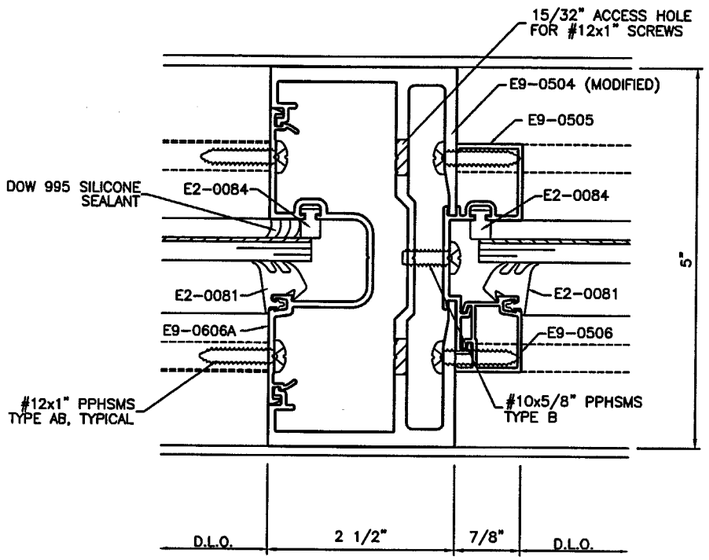

SECTION 7

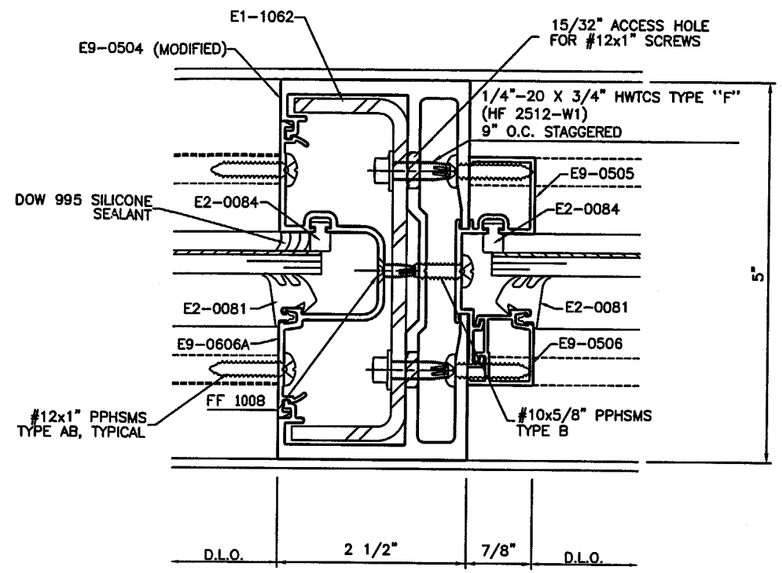

SECTION 7A

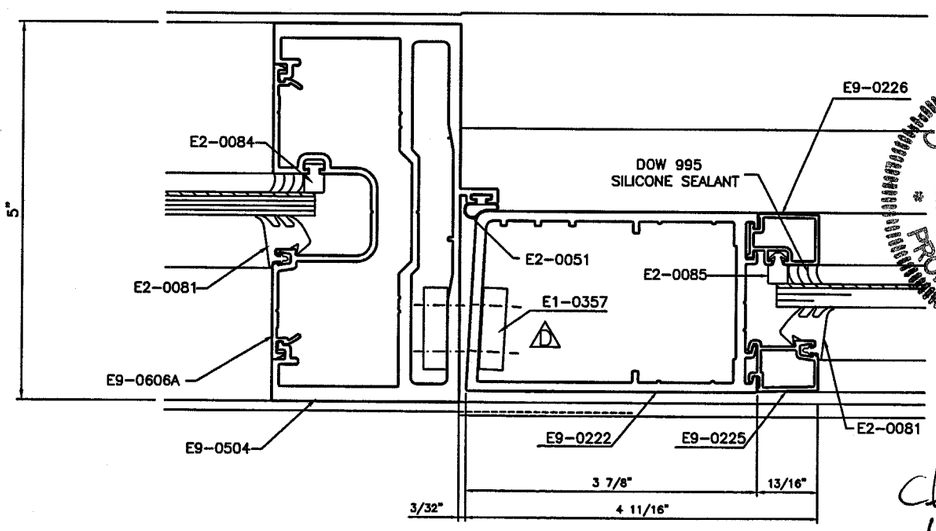

SECTION 8

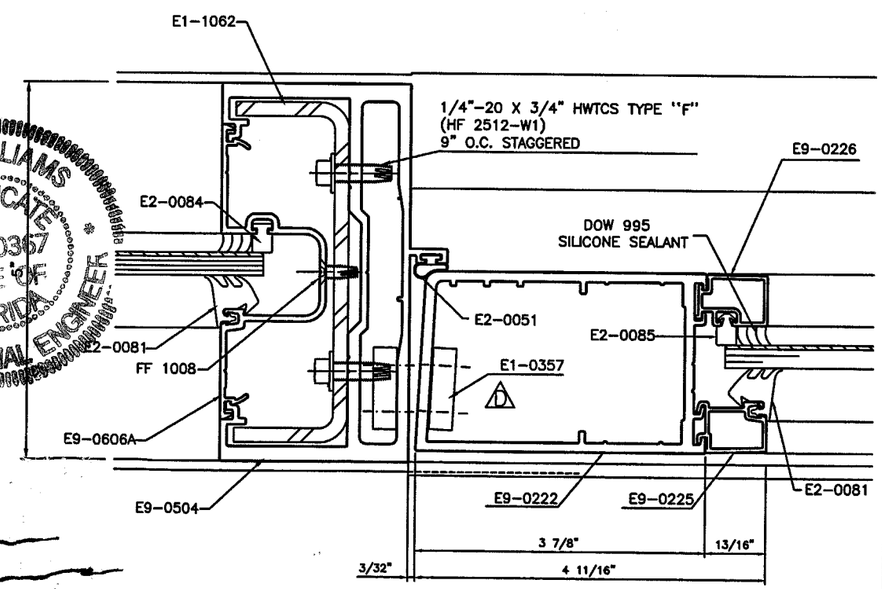

SECTION 8A

C. A. WILLIAMS CERTIFICATE NO. 50367 STATE OF FLORIDA PROFESSIONAL ENGINEER

10/4/00

DOORS & TRANSOM GLAZING POCKET SHOWN FOR REFERENCE; SEE MORE DETAILS OF DOOR IN ITS CORRESPONDING NOTICE OF ACCEPTANCE.

APPROVED AS COMPLYING WITH THE SOUTH FLORIDA BUILDING CODE
DATE October 26, 2000
BY Ishay I. Chands
PRODUCT CONTROL DIVISION
BUILDING CODE COMPLIANCE OFFICE
ACCEPTANCE NO. 00-0315.02

RESERVED FOR METRO-DADE USE ONLY

YKK AP America
YKK AP AMERICA, INC.
5630 GWALTNEY DRIVE
ATLANTA, GEORGIA 30336

SYSTEM	SCALE
YHS-50	1/2

DESCRIPTION: DOOR JAMB DETAILS

DRAWING NUMBER	REV.
YHS-50	D

APPROVED BY	DRAWN BY	DATE	SHEET NO.
J.I.A.	B.C.M.	3/24/99	9 of 14

G:\SYSDWGS\YHS50\DADE\YHS50D09.DWG

REV.	DESCRIPTION	BY	DATE
C	REVISED FOR ALT GLASS	BCM	11/23/99
D	PER METRO DADE REVIEW	BCM	9/12/00

MAX DESIGN PRESSURES
△D +70 PSF −90 PSF

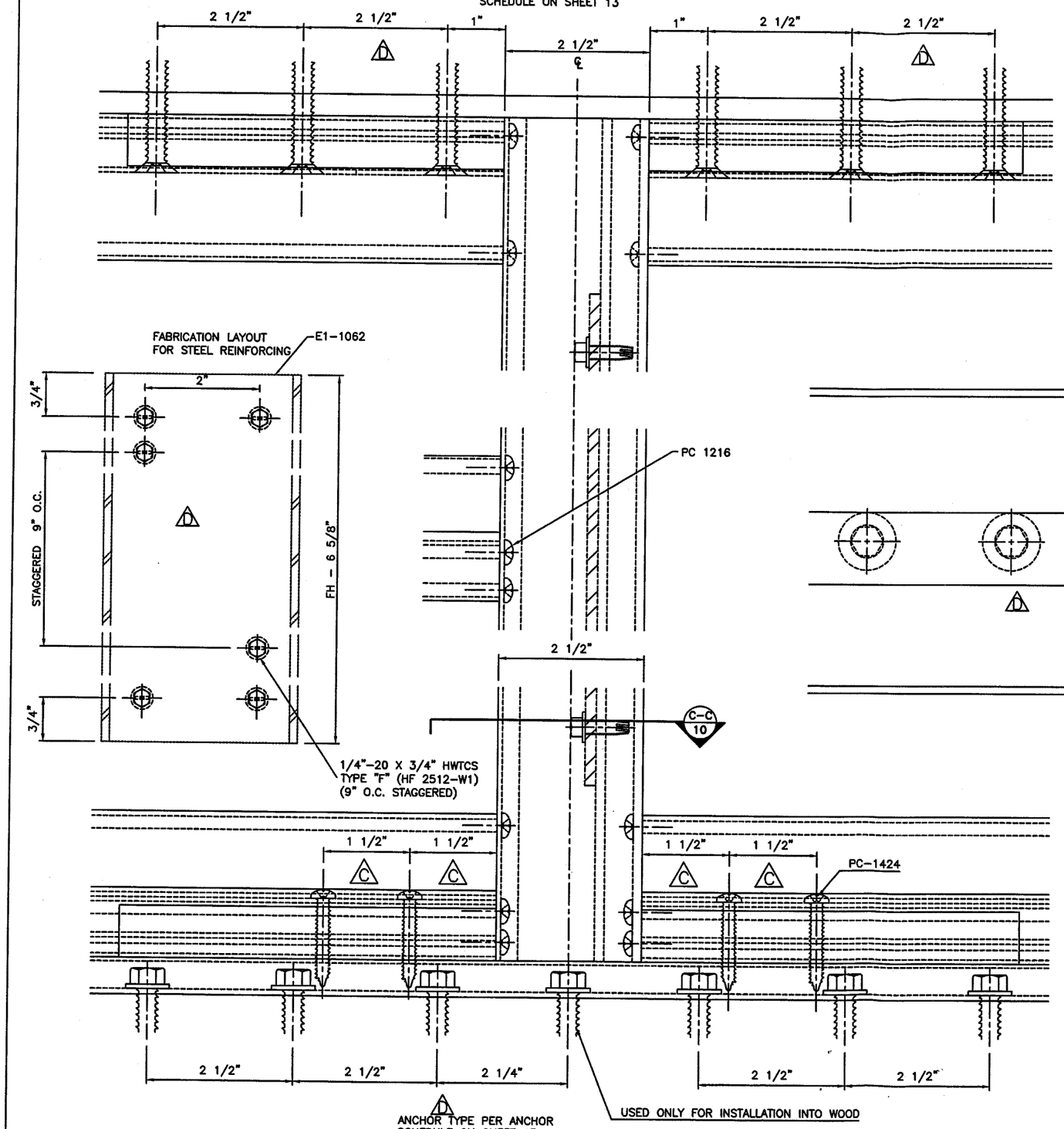

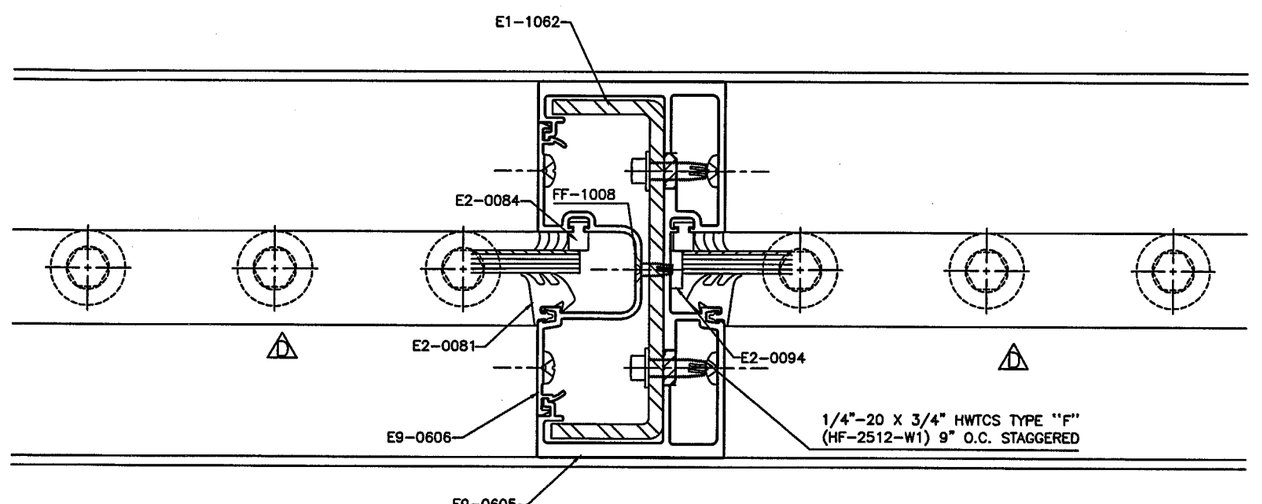

SECTION C-C

REINFORCED VERTICAL MULLION △D

C. A. WILLIAMS CERTIFICATE NO. 50367 STATE OF FLORIDA PROFESSIONAL ENGINEER

Charles Williams
10/4/00

APPROVED AS COMPLYING WITH TH
SOUTH FLORIDA BUILDING CODE
DATE October 26, 2000
BY Ishag I. Chanda
PRODUCT CONTROL DIVISION
BUILDING CODE COMPLIANCE O
ACCEPTANCE NO. 00-0315.

RESERVED FOR METRO-DADE USE ONLY

YKK AP America

YKK AP AMERICA, INC.
5630 GWALTNEY DRIVE
ATLANTA, GEORGIA 3033

SYSTEM	SCALE
YHS-50	1/

DESCRIPTION: REINFORCING DETAILS

DRAWING NUMBER	REV.
YHS-50	

APPROVED BY	DRAWN BY	DATE	SHE
J.I.A.	B.C.M.	3/24/99	1/

G:\SYSDWGS\YHS50\DADE\YHS

REV.	DESCRIPTION	BY	DATE
C	REVISED FOR ALT GLASS	BCM	11/23/99
D	PER METRO DADE REVIEW	BCM	9/12/00

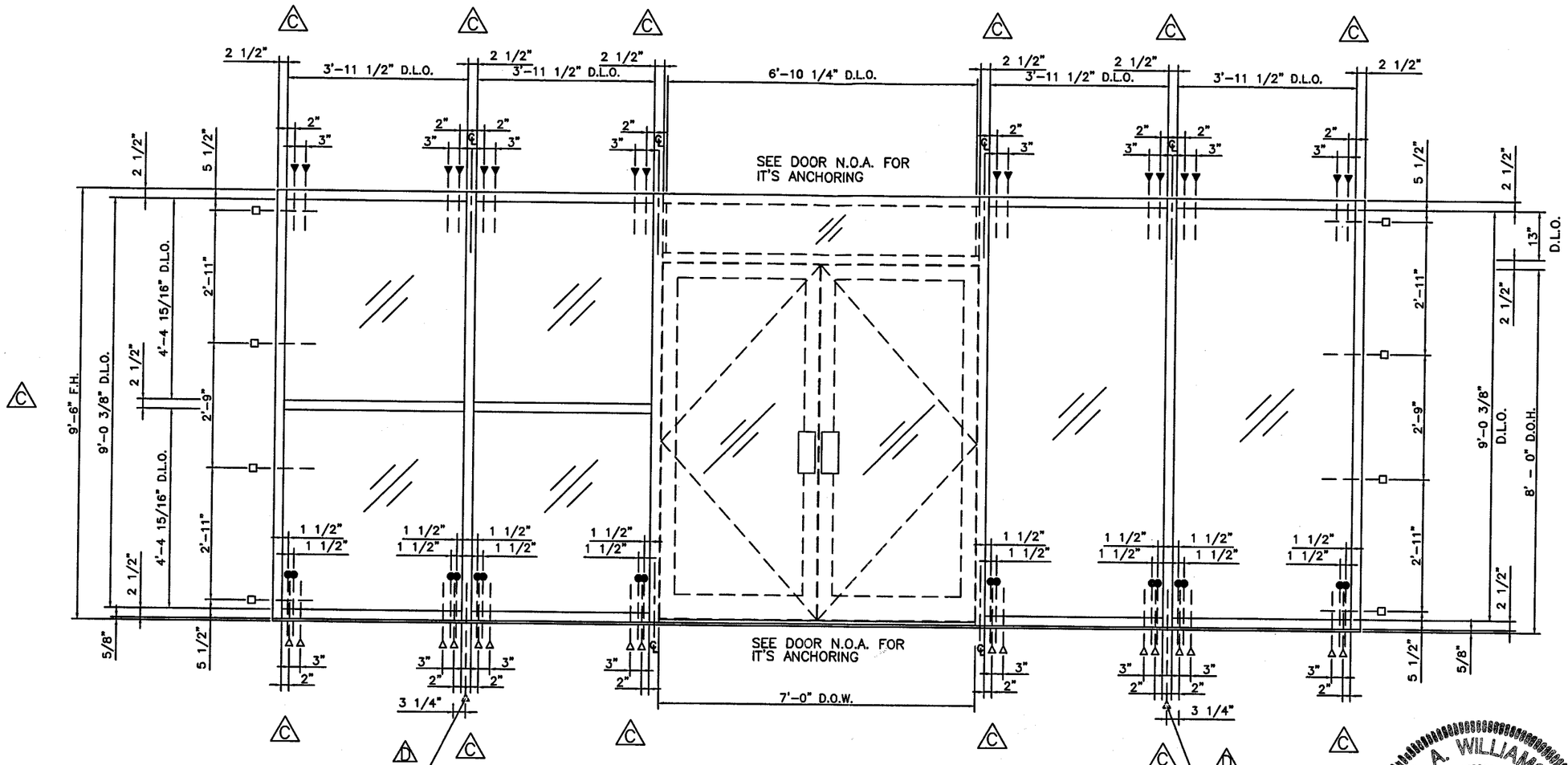

ELEVATION WITHOUT STEEL REINFORCING

SCALE: 3/8" = 1' - 0"

ANCHOR SCHEDULE

MAX. DESIGN PRESSURES (+50 psf, - 70 psf) WITH SAF-GLAS GLAZING OPTION
MAX. DESIGN PRESSURES (+46 psf, - 60 psf) WITH SENTRYGLAS GLAZING OPTION

C. A. WILLIAMS CERTIFICATE NO. 50367 STATE OF FLORIDA PROFESSIONAL ENGINEER

APPROVED AS COMPLYING WITH THE SOUTH FLORIDA BUILDING CODE
DATE October 26, 2000
BY Ishaq I. Chanda
PRODUCT CONTROL DIVISION
BUILDING CODE COMPLIANCE OFFICE
ACCEPTANCE NO. 00-0315.02

ANCHOR FASTENERS

- 1 = SILL FLASHING ANCHOR (E9-0616) 3/8" LAG SCREW W/ FLAT WASHER OR 1/4" x 2" TAPPER MASONRY ANCHOR
- 2 = HEAD ANCHOR (E9-0601) #24 X 4 1/2" WOOD SCREW OR 1/4" x 4"" TAPPER MASONRY ANCHOR
- 3 = THRESHOLD GUTTER ANCHOR (E9-0502) #14 x 1/2" PPHSMS TYPE AB
- 4 = SILL GUTTER ANCHOR (E9-0615) #14 x 1 1/2" PPHSMS TYPE AB
- 5 = JAMB MULLION ANCHOR (E9-0604) #24 X 4 1/2" WOOD SCREW OR 1/4" x 4" TAPPER MASONRY ANCHOR

ANCHOR NOTES:

1. FOR ANCHORING INTO WOOD SUBSTRATE:
1.1 TWO 2X WOOD BUCK ARE REQUIRED TO ACCOMODATE MIN. EMBEDMENT AS PER CHART 12.1

2. FOR ANCHORING INTO CONCRETE:
2. SEE CHART 12.1 FOR MIN. EMBEDMENTS
2.2. CONCRETE MUST BE 3000 PSI CONCRETE MIN. AT TOP AND BOTTOM.
2.3. CONCRETE MASONRY UNITS AT SIDES MUST BE FILLED WITH GROUT.

CHART 12.1

CONDITION	MINIMUM EMBEDMENT	
	WOOD	CONCRETE
JAMB/HEAD PERIMETER	3"	1 3/4"
SILL FLASHING	3"	1 3/4"

Chandra Williams 10/4/00

RESERVED FOR METRO-DADE USE ONLY

YKK AP America

YKK AP AMERICA, INC.
5630 GWALTNEY DRIVE
ATLANTA, GEORGIA 30336

SYSTEM	SCALE
YHS-50	AS SHOWN

DESCRIPTION: ANCHOR SCHEDULE 1

DRAWING NUMBER	REV.
YHS-50	D

APPROVED BY	DRAWN BY	DATE	SHEET NO.
J.I.A.	B.C.M.	3/24/99	12 of 14

G:\SYSDWGS\YHS50\DADE\YHS50D12.DWG

REV.	DESCRIPTION	BY	DATE
D	THIS SHEET NEW THIS REVISION	BCM	9/12/00

MAX DESIGN PRESSURES
△D +50 PSF −70 PSF

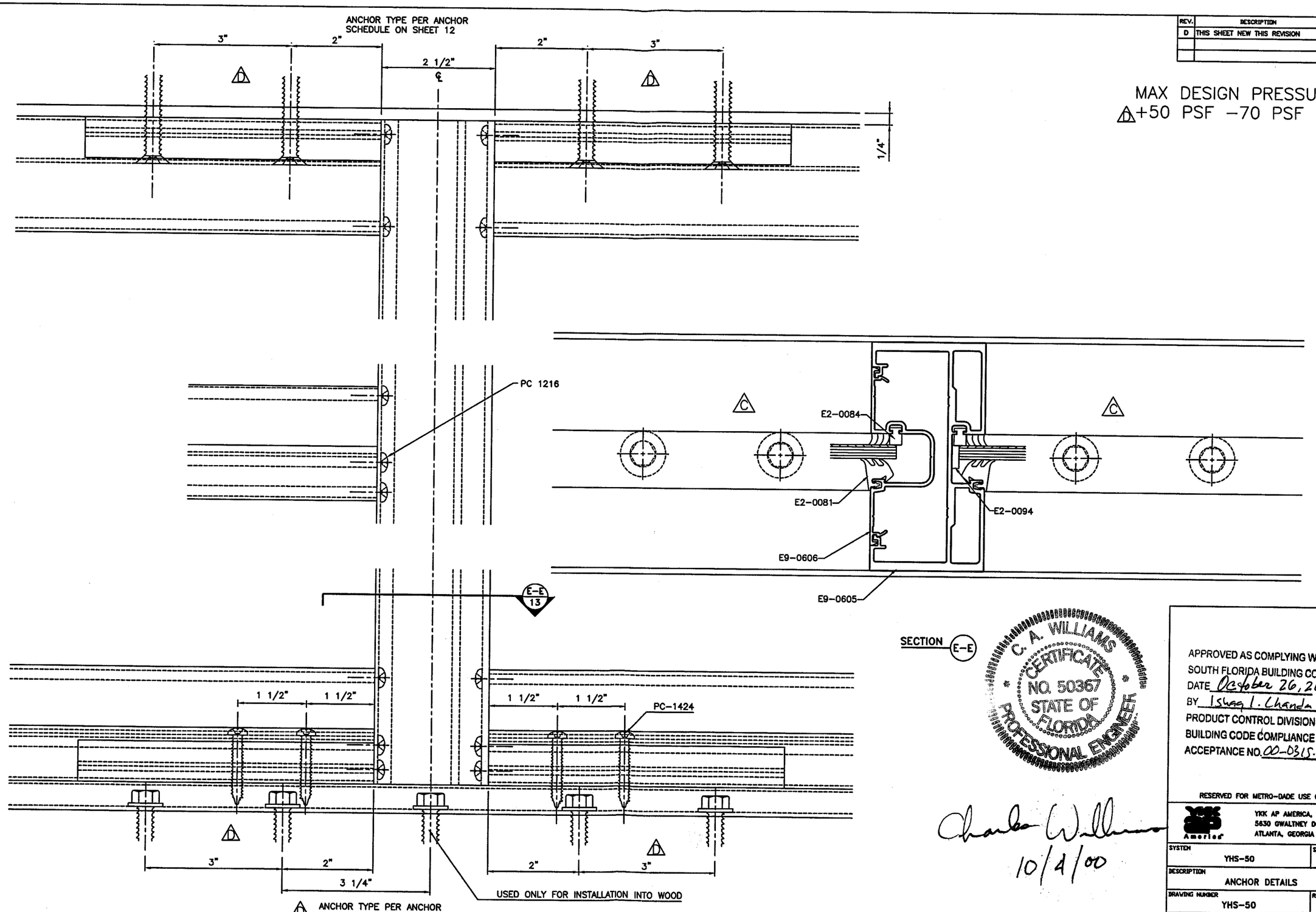

C. A. WILLIAMS CERTIFICATE NO. 50367 STATE OF FLORIDA PROFESSIONAL ENGINEER

Charles Williams
10/4/00

APPROVED AS COMPLYING WITH THE SOUTH FLORIDA BUILDING CODE
DATE October 26, 2000
BY Ishwar I. Chanda
PRODUCT CONTROL DIVISION
BUILDING CODE COMPLIANCE OFFICE
ACCEPTANCE NO. 00-0315.02

RESERVED FOR METRO-DADE USE ONLY

YKK AP AMERICA, INC.
5630 GWALTNEY DRIVE
ATLANTA, GEORGIA 30336

SYSTEM	SCALE
YHS-50	1/2

DESCRIPTION: ANCHOR DETAILS

DRAWING NUMBER	REV.
YHS-50	D

APPROVED BY	DRAWN BY	DATE	SHEET NO.
J.I.A.	B.C.M.	3/24/99	11 of 14

G:\SYSDWGS\YHS50\DADE\YHS50D11.D

REV.	DESCRIPTION	BY	DATE
C	REVISED FOR ALT GLASS	BCM	11/23/99
D	PER METRO DADE REVIEW	BCM	9/12/00

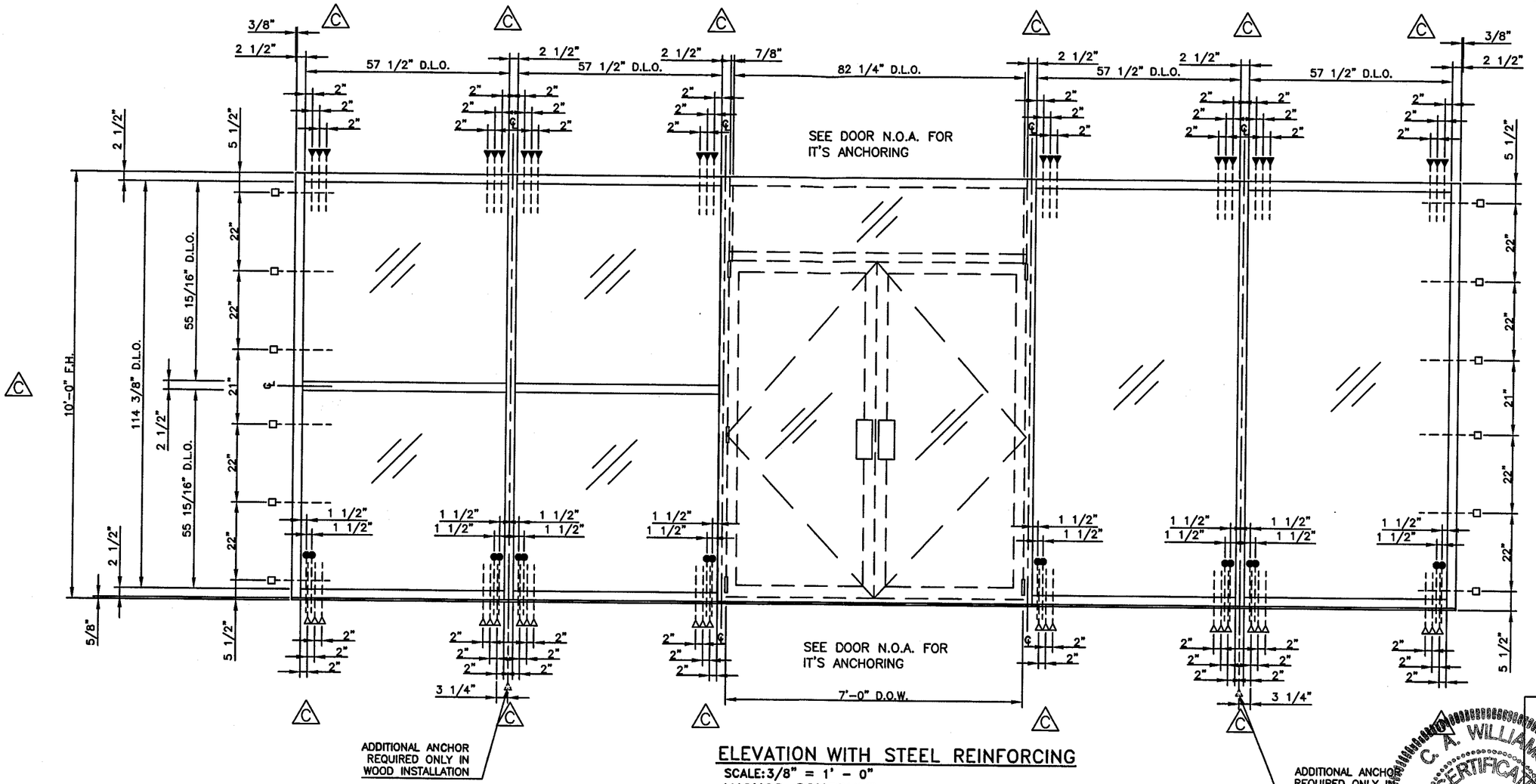

ELEVATION WITH STEEL REINFORCING

SCALE: 3/8" = 1' - 0"

ANCHOR SCHEDULE

MAX. DESIGN PRESSURES (+70 psf, - 90 psf) WITH SAF-GLAS GLAZING OPTION
MAX. DESIGN PRESSURES (+68 psf, - 86.3 psf) WITH SENTRYGLAS GLAZING OPTION

APPROVED AS COMPLYING WITH THE SOUTH FLORIDA BUILDING CODE
DATE October 26, 2000
BY Ishaq I. Chanda
PRODUCT CONTROL DIVISION
BUILDING CODE COMPLIANCE OFFICE
ACCEPTANCE NO. 00-0315.02

C. A. WILLIAMS CERTIFICATE NO. 50367 STATE OF FLORIDA PROFESSIONAL ENGINEER

ANCHOR FASTENERS

- [1] SILL FLASHING ANCHOR (E9-0616) 3/8 " LAG SCREW W/ FLAT WASHER OR 3/8" X 2" TAPPER MASONRY ANCHOR (1)
- [2] HEAD ANCHOR (E9-0601) #24 X 4 1/2" WOOD SCREW OR 3/8" X 4" TAPPER MASONRY ANCHOR (1)
- [3] THRESHOLD GUTTER ANCHOR (E9-0502) #14 x 1/2" PPHSMS TYPE AB
- [4] SILL GUTTER ANCHOR (E9-0615) #14 x 1 1/2" PPHSMS TYPE AB (1)
- [5] JAMB MULLION ANCHOR (E9-0604) #24 X 4 1/2" WOOD SCREW OR 3/8" X 4" TAPPER MASONRY ANCHOR (1)

ANCHOR NOTES: (1)

1. FOR ANCHORING INTO WOOD SUBSTRATE:
1.1 TWO 2X WOOD BUCK ARE REQUIRED TO ACCOMODATE MIN. EMBEDMENT AS PER CHART 13.1

2. FOR ANCHORING INTO CONCRETE:
2.1. SEE CHART 13.1 FOR MIN. EMBEDMENTS
2.2. CONCRETE MUST BE 3000 PSI CONCRETE MIN. AT TOP AND BOTTOM.
2.3. CONCRETE MASONRY UNITS AT SIDES MUST BE FILLED WITH GROUT.

CHART 13.1 (1)

CONDITION	MINIMUM EMBEDMENT	
	WOOD	CONCRETE
JAMB/HEAD PERIMETER	3"	1 3/4"
SILL FLASHING	3"	1 3/4"

Charles Williams
10/4/00

RESERVED FOR METRO-DADE USE ONLY

YKK AP AMERICA, INC.
5630 GWALTNEY DRIVE
ATLANTA, GEORGIA 30336

SYSTEM	SCALE
YHS-50	AS SHOWN

DESCRIPTION: ANCHOR SCHEDULE 2

DRAWING NUMBER	REV.
YHS-50	D

APPROVED BY	DRAWN BY	DATE	SHEET NO.
J.I.A.	B.C.M.	3/24/99	13 of 14

G:\SYSDWGS\YHS50\DADE\YHS50D13.DWG

MATERIAL LIST

DESCRIPTION	SHAPE #	MATERIAL	BASIC DIMENSIONS	REMARK	REV
<STOREFRONT>					
HEAD	E9-0601	6063-T5	2 1/2" x 5"		
SILL	E9-0615	6063-T5	2 1/2" x 5"		D
HORIZONTAL	E9-0603	6063-T5	2 1/2" x 5"		
GLASS STOP	E9-0608	6063-T5	1 7/16" x 2"		
JAMB	E9-0604	6063-T5	2 1/2" x 5"		
MULLION	E9-0605	6063-T5	2 1/2" x 5"	REVISION A	D
GLAZING POCKET FILLER	E9-0606	6063-T5	1 3/8" x 3 7/8"	REVISION A	
SILL FLASHING	E9-0616	6063-T5	5/8" X 5 9/32"		D

PART LIST

DESCRIPTION	PART #	MATERIAL	BASIC DIMENSIONS	REMARK
ANCHOR PLATE	E1-1071	6063-T5	7/8" x 3 7/8" x 6 1/2"	(FROM EXT. E9-0614)
FILLER PLATE	E1-1063	6063-T5	7/8" x 3 7/8" x 2 1/2"	(FROM EXT. E9-0614)
STEEL REINFORCING	E1-1062	STEEL ASTM A -569	1 1/2" x 4 1/2" x 3/16"	L - FH -6 5/8"
SILL FLASHING END DAM	E1-1070	ALUMINUM	5 1/4"	

DEPTH 5"

SYSTEM YHS-50

DESCRIPTION HURRICANE STOREFRONT

FINISH PAINTED OR ANODIZED

HARDWARE N/A

GLAZING SEE ELEVATION SHEET

BILL OF MATERIALS

FOR SINGLE GLAZING

PART LIST

DESCRIPTION	PART #	MATERIAL	BASIC DIMENSIONS	COLOR	REMARK	REV
EXT. GASKET	E2-0081	EPDM		BLACK	EXT FOR 1/4" GLASS	
EXT. GASKET	E2-0082	EPDM		BLACK	EXT FOR 3/8" & 7/16" GLASS	
EXT. GASKET	E2-0083	EPDM		BLACK	EXT FOR 9/16" GLASS	D
INT. SILICONE SPACER	E2-0084	EPDM		BLACK		
SIDE BLOCK	E2-0094	EPDM		BLACK		
SETING BLOCK	E2-0080	EPDM		BLACK		
PP SMS (AB)	PC-1216	SAE GR 5 STEEL	#12 x 1"	ZINC PL	FOR SCREW SPLINE	
FP SMS (F)	FF-1008	SAE GR 5 STEEL	#10 x 1/2"	ZINC PL	FOR GLAZING POCKET FILLER	
PP SMS (AB)	PC-1408	SAE GR 5 STEEL	#14 x 1/2"	ZINC PL	FOR THRESHOLD	
PP SMS (AB)	PC-1424	SAE GR 5 STEEL	#14 x 1 1/2"	ZINC PL	FOR SILL	
HW HMS (F)	HF-2512-W1	SAE GR 5 STEEL	1/4" - 20 x 3/4" TYPE F	ZINC PL	FOR STEEL REINF WHEN OCCUR	
<FOR INSTALLATION IN CONCRETE>						
HH RAWL TAPPER			1/4" x 2""		FOR SILL FLASHING (W/O REINF)	
FPH RAWL TAPPER			1/4" x 4"		FOR HEAD AND JAMB (W/O REINF)	
HH RAWL TAPPER			3/8" x 2"		FOR SILL FLASHING (W/ REINF)	
FPH RAWL TAPPER			3/8" x 4"		FOR HEAD AND JAMB (W/ REINF)	
<FOR INSTALLATION INTO WOOD>						
LAG SCREW		SAE GR 5 STEEL	3/8" x 3"		FOR SILL FLASHING	D
FPH WOOD SCREW		SAE GR 5 STEEL	#24 x 4 1/2"		FOR HEAD AND JAMB	D
DOW 795		SILICONE			FOR PERIMETER CAULKING	
DOW 995		SILICONE			FOR STRUCTURAL CAULKING	

NOTE :
APPROVED AS COMPLYING WITH THE
SOUTH FLORIDA BUILDING CODE
DATE October 26, 2000
BY Ishaq I. Chanda
PRODUCT CONTROL DIVISION
BUILDING CODE COMPLIANCE OFFICE
ACCEPTANCE NO. 00-0315.02

LP LOOSE PART
S SELECTION PART
OP OPTION PART Y: COLOR INDICATED

10/4/00

REV	DESCRIPTION	BY	DATE
A	NO CHANGE	JIA	6/30/99
B	PER M/DADE REVIEW	DHM	8/31/99
C	REV FOR ALT GLASS	BCM	11/23/99
D	PER M/DADE REVIEW	BCM	9/12/00

NO. YHS-50

CKD BY	BY	DATE	SHEET NO.
J.I.A.	B.C.M.	3/25/99	14 of 14

G:\SYSDWGS\YHS50\DADE\YHS50D14.XLS