MIAMI-DADE COUNTY, FLORIDA
METRO-DADE FLAGLER BUILDING

BUILDING CODE COMPLIANCE OFFICE
METRO-DADE FLAGLER BUILDING
140 WEST FLAGLER STREET, SUITE 1603
MIAMI, FLORIDA 33130-1563
(305) 375-2901 FAX (305) 375-2908

CONTRACTOR LICENSING SECTION
(305) 375-2527 FAX (305) 375-2558

CONTRACTOR ENFORCEMENT SECTION
(305) 375-2966 FAX (305) 375-2908

PRODUCT CONTROL DIVISION
(305) 375-2902 FAX (305) 372-6339

PRODUCT CONTROL NOTICE OF ACCEPTANCE

Hurst Awning Company, Inc.
5795 N.W. 36 Avenue
Miami FL 33142

Your application for Product Approval of:
Extruded Aluminum Roll-up Shutter
under Chapter 8 of the Code of Miami-Dade County governing the use of Alternate Materials and Types of Construction, and completely described herein, has been recommended for acceptance by the Miami-Dade County Building Code Compliance Office (BCCO) under the conditions specified herein.

This approval shall not be valid after the expiration date stated below. BCCO reserves the right to secure this product or material at anytime from a jobsite or manufacturer's plant for quality control testing.
If this product or material fails to perform in the approved manner, BCCO may revoke, modify, or suspend the use of such product or material immediately. BCCO reserves the right to revoke this approval, if it is determined BCCO that this product or material fails to meet the requirements of the South Florida Building Code.

The expense of such testing will be incurred by the manufacturer.

Acceptance No.: 00-0327.05

Expires: 04/25/2003

Raul Rodriguez
Chief Product Control Division

THIS IS THE COVERSHEET, SEE ADDITIONAL PAGES FOR SPECIFIC AND GENERAL CONDITIONS

BUILDING CODE & PRODUCT REVIEW COMMITTEE

This application for Product Approval has been reviewed by the BCCO and approved by the Building Code and Product Review Committee to be used in Dade County, Florida under the conditions set forth above.

Francisco J. Quintana, R.A.
Director
Miami-Dade County
Building Code Compliance Office

Approved: 05/12/2000

Hurst Awning Company, Inc.

ACCEPTANCE No. : 00-0327.05

APPROVED : MAY 1 2 2000

EXPIRES : 04/25/2003

NOTICE OF ACCEPTANCE: SPECIFIC CONDITIONS

1. SCOPE

This renews the Notice of Acceptance No. 96-1003.02, which was issued on April 24, 1997. It approves an Extruded Aluminum Roll-Up Shutter, as described in Section 2 of this Notice of Acceptance, designed to comply with the South Florida Building Code, 1994 Edition for Miami-Dade County, for the locations where the pressure requirements, as determined by SFBC Chapter 23, do not exceed the Design Pressure Rating values indicated in the approved drawings.

2. PRODUCT DESCRIPTION

This Extruded Aluminum Roll-Up Shutter and its components shall be constructed in strict compliance with the following documents: Drawing No. 96-380, titled "Roll-Up Shutter", prepared by Knezevich & Associates, Inc., dated August 22, 1996, last revision #1 dated August 22, 1996, sheets 1 through 13 of 13, bearing the Miami-Dade County Product Control Approval and Renewal stamps with the Notice of Acceptance numbers and approval dates by the Miami-Dade County Product Control Division. These documents shall hereinafter be referred to as the approved drawings.

3. LIMITATIONS

All permanent set components, included but not limited to embedded anchor bolts, threaded cones, metal shields, headers and sills, must be protected against corrosion, contamination and damage at all times.

4. INSTALLATION

This Extruded Aluminum Roll-Up Shutter and its components shall be installed in strict compliance with the approved drawings.

5. LABELING

Each unit shall bear a permanent label with the manufacturer's name or logo, city, state and the following statement: "Miami-Dade County Product Control Approved".

6. BUILDING PERMIT REQUIREMENTS

6.1 Application for building permit shall be accompanied by copies of the following:

6.1.1 This Notice of Acceptance.

6.1.2 Duplicate copies of the approved drawings, as identified in Section 2 of this Notice of Acceptance, clearly marked to show the components selected for the proposed installation.

6.1.3 Any other documents required by the Building Official or the South Florida Building Code (SFBC) in order to properly evaluate the installation of this system.

Manuel Perez, P.E. - Product Control Examiner
Product Control Division

Hurst Awning Company, Inc.

ACCEPTANCE No. : 00-0327.05

APPROVED : MAY 1 2 2000

EXPIRES : 04/25/2003

NOTICE OF ACCEPTANCE: STANDARD CONDITIONS

1 Renewal of this Acceptance (approval) shall be considered after a renewal application has been filed and the original submitted documents, including test-supporting data, engineering documents, are no older than eight (8) years.

2. Any and all approved products shall be permanently labeled with the manufacturer's name, city, state, and the following statement: "Miami-Dade County Product Control Approved", or as specifically stated in the specific conditions of this Acceptance.

3. Renewals of Acceptance will not be considered if:
   a. There has been a change in the South Florida Building Code affecting the evaluation of this product and the product is not in compliance with the code changes.
   b. The product is no longer the same product (identical) as the one originally approved.
   c. If the Acceptance holder has not complied with all the requirements of this acceptance, including the correct installation of the product.
   d. The engineer, who originally prepared, signed and sealed the required documentation initially submitted, is no longer practicing the engineering profession.

4. Any revision or change in the materials, use, and/or manufacture of the product or process shall automatically be cause for termination of this Acceptance, unless prior written approval has been requested (through the filing of a revision application with appropriate fee) and granted by this office.

5. Any of the following shall also be grounds for removal of this Acceptance:
   a. Unsatisfactory performance of this product or process.
   b. Misuse of this Acceptance as an endorsement of any product, for sales, advertising or any other purposes.

6. The Notice of Acceptance number preceded by the words Miami-Dade County, Florida, and followed by the expiration date may be displayed in advertising literature. If any portion of the Notice of Acceptance is displayed, then it shall be done in its entirety.

7. A copy of this Acceptance as well as approved drawings and other documents, where it applies, shall be provided to the user by the manufacturer or its distributors and shall be available for inspection at the job site at all time. The engineer needs not reseal the copies.

8. Failure to comply with any section of this Acceptance shall be cause for termination and removal of Acceptance.

9. This Notice of Acceptance consists of pages 1, 2 and this last page 3.

END OF THIS ACCEPTANCE

Manuel Perez, P.E. - Product Control Examiner
Product Control Division

NOTES:

1. THIS ROLL-UP SHUTTER SYSTEM IS DESIGNED IN ACCORDANCE WITH THE SOUTH FLORIDA BUILDING CODE, 1994 EDITION, AND THE SOUTH FLORIDA BUILDING CODE, 1994 BROWARD COUNTY EDITION.
2. POSITIVE AND NEGATIVE DESIGN PRESSURE CALCULATIONS SHALL BE PERFORMED IN ACCORDANCE WITH ASCE 7-88 'MINIMUM DESIGN LOADS FOR BUILDINGS AND OTHER STRUCTURES'.
3. ALUMINUM EXTRUSIONS SHALL BE 6063-T6 ALUMINUM ALLOY, U.O.N.
4. EACH SHUTTER ASSEMBLY SHALL BE PERMANENTLY LABELED ON HOOD OR GUIDE RAIL AS FOLLOWS:

   HURST AWNING CO., INC.
   MIAMI, FL.
   DADE COUNTY PROD. APPRD.

5. ALL BOLTS AND WASHERS SHALL BE GALVANIZED OR STAINLESS STEEL W/ A MIN. Fy = 33 KSI. POP RIVETS SHALL BE 3/16'ø 5052 ALUM. ALLOY
6. MATERIAL SPECIFICATIONS NOTED HEREIN ARE THE MANUFACTURER'S REPRESENTATION OF MATERIALS TO BE USED IN PRODUCT TESTING.
7. THE DETAILS AND SPECIFICATIONS SHOWN HEREIN REPRESENT THE PRODUCTS TESTED FOR IMPACT, CYCLIC AND UNIFORM STATIC AIR PRESSURE IN CONFORMANCE W/ DADE COUNTY PROTOCOLS PA 201, 202, AND 203 WITH DESIGN LOADS AS FOLLOWS:

   POSITIVE DESIGN LOAD + 60 PSF FOR 56' SAMPLE
   NEGATIVE DESIGN LOAD - 60 PSF FOR 56' SAMPLE

   POSITIVE DESIGN LOAD + 60 PSF FOR 42' SAMPLE
   NEGATIVE DESIGN LOAD - 82 PSF FOR 42' SAMPLE

   DESIGN IS BASED ON HETI TEST REPORT No. 94-392a AND 94-389a.

8. DESIGN CRITERIA FOR MULTIPLE SPANS:
   a. MAXIMUM DEFLECTION OF OUTSIDE HEADERS = L/30
   b. MAXIMUM DEFLECTION OF POSITIVE (INSIDE) STORM BARS = L/30 OR 1' (OPTIONAL) L/30 OR 0.5'
   c. MAXIMUM DEFLECTION OF NEGATIVE (OUTSIDE) STORM BARS = L/30
   d. MAXIMUM DEFLECTION OF SLATS = L/30 OR 2'
   e. MAXIMUM DEFLECTION OF MULIONS = L/180

INSTRUCTIONS:

DETERMINE ASCE 7-88 WIND LOAD ON OPENING TO BE COVERED WITH A ROLL UP SHUTTER.

DETERMINE THE SLAT SPAN THAT YOU WILL NEED TO COVER THE OPENING.

DETERMINE IF YOU WILL NEED A SINGLE SPAN, DOUBLE SPAN OR THREE OR MORE SPANS TO COVER THE OPENING.

SINGLE SLAT SPANS
FOR A SINGLE SPAN, SEE SCHEDULE 'B', ALLOWABLE SLAT SPANS ON PAGE 5. LOCATE THE DESIGN WIND LOAD, AND THEN READ THE ALLOWABLE SLAT SPAN.

MULTIPLE SLAT SPANS WITH STORM BARS
FOR A DOUBLE SPAN, UTILIZING STORM BARS, SEE SCHEDULE 'F' ON PAGE 7 FOR NEGATIVE DESIGN WIND LOADS AND STORM BARS. SEE SCHEDULE 'G' OR 'H' ON PAGE 8 FOR POSITIVE DESIGN WIND LOADS AND STORM BARS. THE LAST ROW OF EACH DESIGN LOAD INDICATES THE MAX. ALLOWABLE SLAT SPAN. UTILIZING THAT OR A LESSER SLAT SPAN, READ SCHEDULES HORIZONTALLY FROM LEFT TO RIGHT, UNTIL YOU FIND A STORM BAR SIZE AND HEIGHT THAT FITS THE OPENING.

FOR THREE OR MORE SPANS, UTILIZING STORM BARS, ENTER SCHEDULES 'I' AND 'J' OR 'K' RESPECTIVELY (PAGES 9 & 10). FOR YOUR NEG. AND POS. WIND LOADS. THE LAST ROW OF EACH DESIGN LOAD INDICATES THE MAX. ALLOWABLE SLAT SPAN. UTILIZING THAT OR A LESSER SLAT SPAN, READ SCHEDULE HORIZONTALLY FROM LEFT TO RIGHT, UNTIL YOU FIND A STORM BAR SIZE AND HEIGHT THAT FITS THE OPENING.

MULLIONS
FOR ALLOWABLE SLAT SPANS, UTILIZING A PERMANENT MULLION, SEE SCHEDULE 'L' ON PAGE 11. SELECT YOUR DESIGN WIND LOAD. THE LAST ROW OF EACH DESIGN LOAD INDICATES THE MAX. ALLOWABLE SLAT SPAN. UTILIZING THAT OR A LESSER SPAN, READ FROM LEFT TO RIGHT AND SELECT THE PERMANENT MULLION THAT HAS SUFFICIENT HEIGHT FOR YOUR OPENING.

FOR PROPER CONNECTIONS AT THE TOP AND BOTTOM OF STORM BARS AND MULLIONS, SEE SCHEDULE 'C' OR 'D', PAGE 6. EACH STORM BAR AND MULLION SCHEDULE HAS REACTION LOADS INDICATED ON THE SCHEDULE TO THE RIGHT OF THE ALLOWABLE SPAN. TAKE THAT NUMBER AND ENTER SCHEDULE 'C' FOR A TENSION CONNECTION OR SCHEDULE 'D' FOR A SHEAR CONNECTION TO DETERMINE THE TYPE AND SIZE OF ANCHOR AS WELL AS THE EMBEDMENT INTO CONCRETE, CONCRETE BLOCK OR WOOD. THIS SCHEDULE WILL ALSO GIVE YOU THE SIZE AND THICKNESS OF THE ALUMINUM ANGLES TO BE USED AS WELL AS THE TEK SCREW ATTACHMENT OF THE ANGLE TO THE STORM BAR.

HEADERS
HEADERS FOR STORM BARS CAN BE FOUND IN SCHEDULE 'M' ON PAGES 12 & 13. SELECT THE DESIGN WIND LOAD AND ENTER SCHEDULE 'M'. NOTE THAT THE MAXIMUM ALLOWABLE OPENING HEIGHT IS SHOWN AT THE TOP OF THE SCHEDULE. READ ACROSS FROM LEFT TO RIGHT FROM YOUR DESIGN WIND LOAD UNTIL YOU INTERSECT THE COLUMN THAT SHOWS YOUR SELECTED OPENING HEIGHT. SEVERAL STORM BAR SIZES ARE IN THE SCHEDULE. YOU MAY CHOOSE FROM THE COLUMN THAT BEST MEETS YOUR REQUIREMENTS.

CONNECTIONS FOR HEADERS MAY ALSO BE FOUND IN SCHEDULES 'C' AND 'D' ON PAGE 6 (SEE REACTION FOR HEADERS IN HEADER REACTION SCHEDULE E, ON PAGE 6).

INDEX

SHEET NO.	DESCRIPTION
1	GENERAL NOTES
2	COMPONENTS
3	SIDE RAIL CONNECTIONS & SECTIONS
4	TYPICAL ELEVATIONS & SECTIONS
5	SLAT SPAN SCHEDULE - HEADER - DRUM SUPPORT
6	ANCHOR SCHEDULE
7	NEG. STORM BAR SCHEDULE (2 SPAN CONDITION)
8	POSITIVE STORM BAR SCHEDULE (2 SPAN CONDITION)
9	NEGATIVE STORM BAR SCHEDULE (3 OR MORE SPANS CONDITION)
10	POSITIVE STORM BAR SCHEDULE (3 OR MORE SPANS CONDITION)
11	MULLION SCHEDULE
12	HEADER SCHEDULE (40 PSF TO 140 PSF DESIGN LOADS)
13	HEADER SCHEDULE (150 PSF TO 230 PSF DESIGN LOADS)

LEGEND

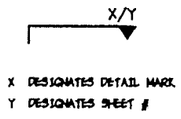

SECTION CUT

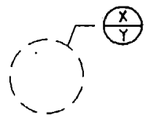

DETAIL MARKER

PRODUCT RENEWED

ACCEPTANCE No. 00-0327.05

EXPIRATION DATE 04/25/2003

By _____
PRODUCT CONTROL DIVISION
BUILDING CODE COMPLIANCE OFFICE

APPROVED AS COMPLYING WITH THE SOUTH FLORIDA BUILDING CODE
DATE APRIL 24 1997
BY _____
PRODUCT CONTROL DIVISION
BUILDING CODE COMPLIANCE OFFICE
ACCEPTANCE NO. 96-1003.02

KNEZEVICH & ASSOCIATES, INC.
CONSULTING ENGINEERS & PRODUCT TESTING
8641 MOKENA DRIVE MIAMI SPRINGS, FL 33166 PHONE: (305) 883-9571 FAX: (305) 883-9572
2701 W. OAKLAND PK. BLVD. SUITE 240 FT. LAUDERDALE, FL 33311 PHONE: (954) 677-9500

COPYRIGHT 1996 KNEZEVICH & ASSOCIATES, INC.

ROLL-UP SHUTTER

HURST AWNING CO.
5795 N.W. 36TH AVE.
MIAMI, FL. 33142
(305) 635-0900

revisions			
no	date	by	description
1	8-22-96		RENEWAL OF 95-51

V.J. KNEZEVICH
PROFESSIONAL ENGINEER
FL License No: PE 0010983

OCT - 1 1996
date 8-22-96

scale	drawn by
AS NOTED	J.W. HILL
design by	checked by
VJK	VJK

drawing no. 96-380

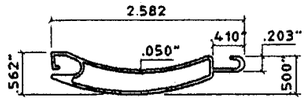

(1) ROLL-UP SLAT
HALF SIZE
6063-T6 ALUMINUM ALLOY

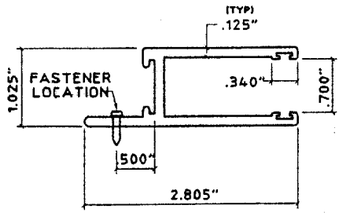

(2) SIDE RAIL
HALF SIZE
6063-T6 ALUMINUM ALLOY

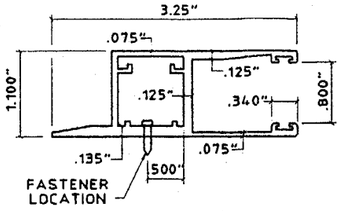

(2a) ALT. SIDE RAIL
HALF SIZE
6063-T6 ALUMINUM ALLOY

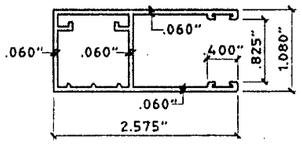

(2b) ALT. SIDE RAIL
HALF SIZE
6063-T6 ALUMINUM ALLOY
MAX. DESIGN LOAD = + 80 PSF
- 135 PSF

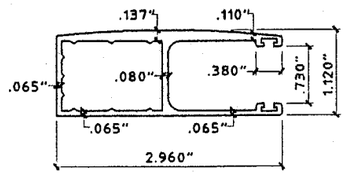

(2c) ALT. SIDE RAIL
HALF SIZE
6063-T6 ALUMINUM ALLOY

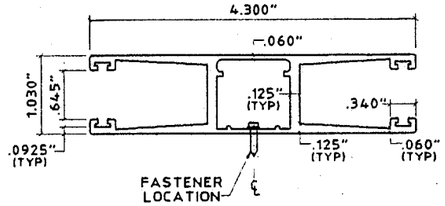

(3) SIDE RAIL
HALF SIZE
6063-T6 ALUMINUM ALLOY

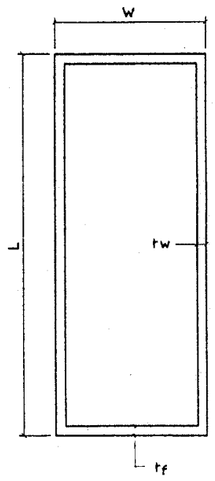

BOX BEAM (TYP A)
(4)(5)(7)(9)(10)(12)(13)(18)(21)(22)

1/8" X 2" CONTINUOUS 6063-T6 AL. STRAP W/ ... 19 #14 SMS @ EQUALLY SPACED (TYP. BOTH SIDES)

NOTE:
CONTINUOUS STRAP MAY BE OMMITED W/ 1/4" FLANGE THICKNESS

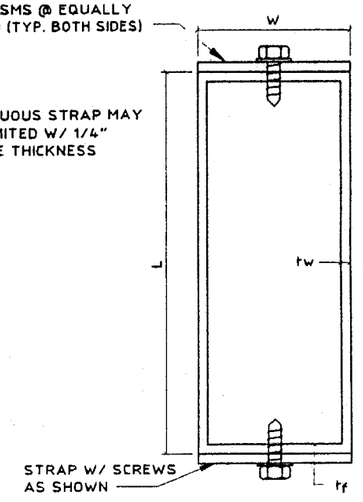

BOX BEAM W/ STRAP (TYPE B)
(6)(8)(11)

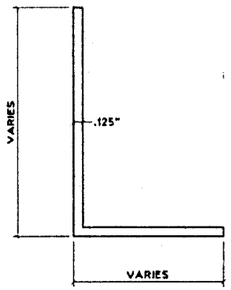

(16) ANGLE
HALF SIZE
6063-T6 ALUMINUM ALLOY

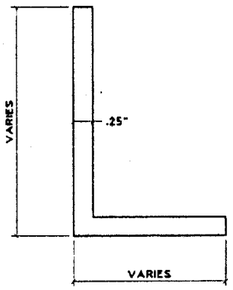

(17) ANGLE
HALF SIZE
6063-T6 ALUMINUM ALLOY

STORM BAR, HEADER, MULLION, BUILDOUT AND ANGLE MEMBER - SCHEDULE A

MEMBER MARK	MEMBER TYPE	W (INCHES)	L (INCHES)	Tf (INCHES)	Tw (INCHES)	2" x 1/8" AL. STRAP REQUIRED
4	A	1-1/2	3	.250	.125	
5	A	2	3	.125	.125	
6	B	2	3	.125	.125	YES
7	A	2	4	.125	.125	
8	B	2	4	.125	.125	YES
9	A	2	4	.250	.250	
10	A	2	5	.125	.125	
11	B	2	5	.125	.125	YES
12	A	2	6	.125	.125	
13	A	2	7	.125	.125	
14	C	2	9	.224	.072	
15	D	2	9	.224	.072	YES
16	ANGLE	2 MIN.	2 MIN.	.125	.125	
17	ANGLE	2 MIN.	2 MIN.	.250	.250	
18	A	2	2	.125	.125	
19	A	3	3	.125	.125	
20	B	4	4	.125	.125	
21	A	1	2	.250	.093	
22	A	2	2	.125	.125	

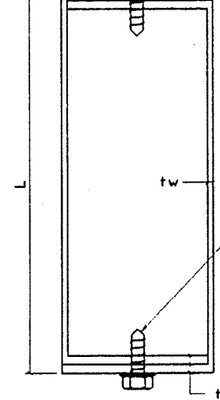

12 X 1" SMS @ 12" O.C. A 3/16"Φ AL. POP RIVET MAY BE USED IN LEU OF SCREW (AGAINST SHUTTER) ON NEGATIVE STORM BAR (TYP. TOP & BOTTOM)

LAP BEAM (TYPE C)
(14)

1/8" X 2" CONTINUOUS 6063-T6 AL. STRAP W/ 12 #14 SMS OR 16 #12 SMS EQUALLY SPACED. (TYP. BOTH SIDES)

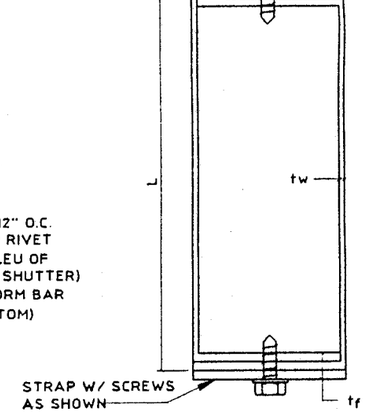

LAP BEAM W/ STRAP (TYPE D)
(15)

NOTE:

2" X 9" LAP BEAM MAY BE USED AS A STORM BAR W/ 1 STRAP ON OUTSIDE SURFACE ONLY, OF OUTSIDE STORM BAR. REDUCED SPAN FOR STORM BAR WILL BE DETERMINED BY APPROVED SITE SPECIFIC ENGINEERING.

PRODUCT RENEWED (A)
ACCEPTANCE No. 00-0327.05
EXPIRATION DATE 04/25/2003
By
PRODUCT CONTROL DIVISION
BUILDING CODE COMPLIANCE OFFICE

MEMBER SCHEDULE
HALF SIZE
6063-T6 ALUMINUM ALLOY

APPROVED AS COMPLYING WITH THE SOUTH FLORIDA BUILDING CODE
DATE APRIL 24 1997
BY
PRODUCT CONTROL DIVISION
BUILDING CODE COMPLIANCE OFFICE
ACCEPTANCE NO. 96-1003.02

KNEZEVICH & ASSOCIATES, INC.
CONSULTING ENGINEERS & PRODUCT TESTING
641 MOKENA DRIVE
MIAMI SPRINGS, FL 33166
PHONE: (305) 883-9571
FAX: (305) 883-9572
2701 W. OAKLAND PK. BLVD.
SUITE 240
FT. LAUDERDALE, FL 33311
PHONE: (954) 677-9500

COPYRIGHT 1996 KNEZEVICH & ASSOCIATES, INC.

ROLL-UP SHUTTER
HURST AWNING CO.
5795 N.W. 36TH AVE.
MIAMI, FL. 33142
(305) 635-0900

revisions

no	date	by	description
1	8-22-96		RENEWAL OF 93-51

V.J. KNEZEVICH
PROFESSIONAL ENGINEER
FL License No:
PE 0010983

OCT - 1 1996

date 8-22-96
scale AS NOTED
drawn by J.W. HILL
design by VJK
checked by VJK
drawing no. 96-380
sheet 2 of 13

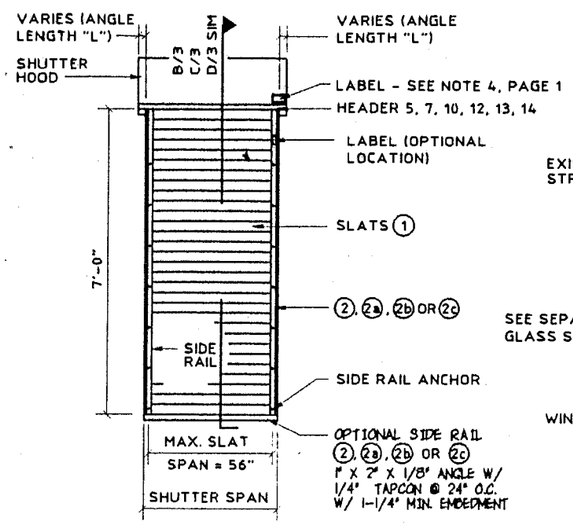

A FACE MOUNT & BUILD OUT ELEVATION

(SINGLE SPAN CONDITION)

N.T.S.

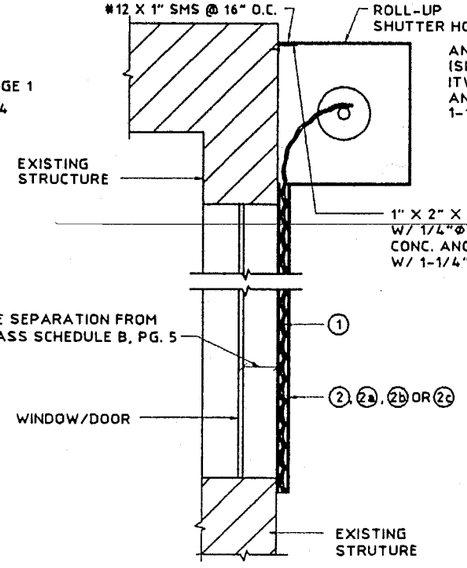

B FACE MOUNT SECTION

SCALE : 3/4" = 1'-0"

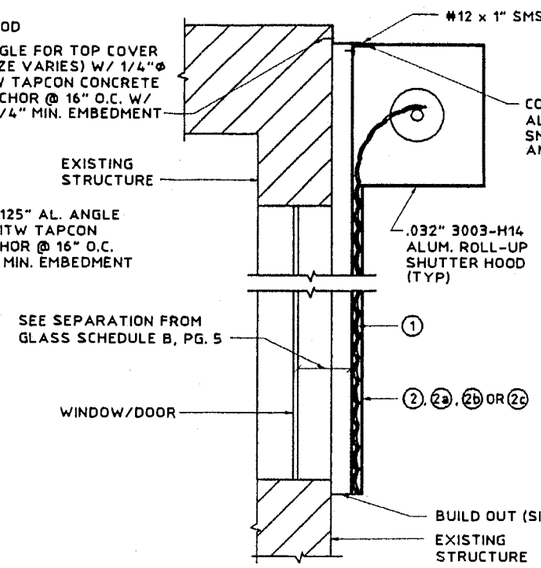

C BUILD OUT SECTION

SCALE : 3/4" = 1'-0"

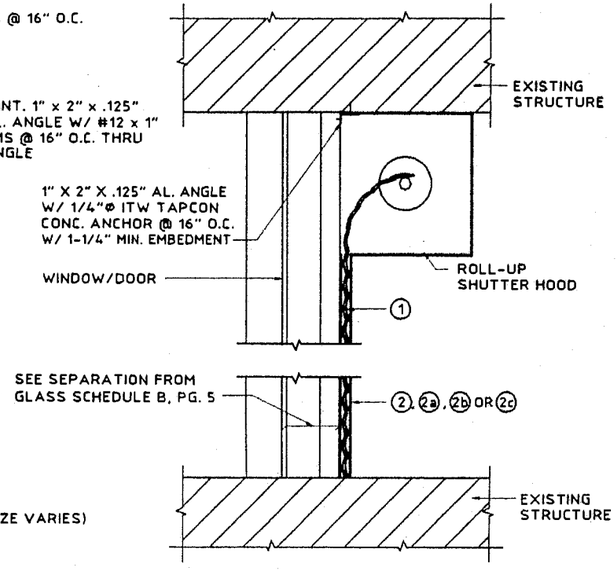

D INSIDE MOUNT SECTION

SCALE : 3/4" = 1'-0"

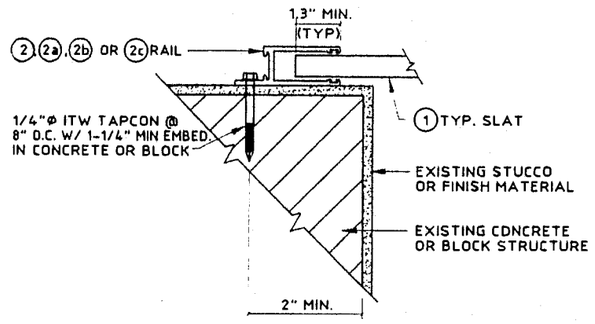

E WALL MOUNT (PLAN)

SCALE : 3" = 1'-0"

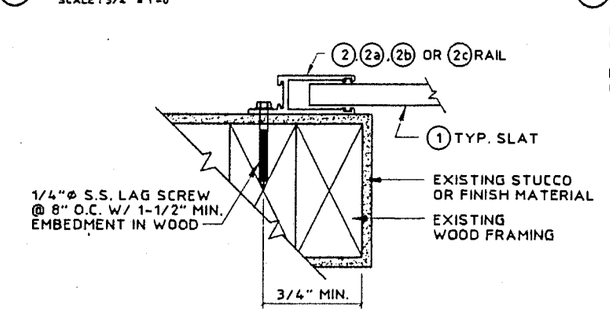

F WOOD FRAME WALL MOUNT (PLAN)

SCALE : 3" = 1'-0"

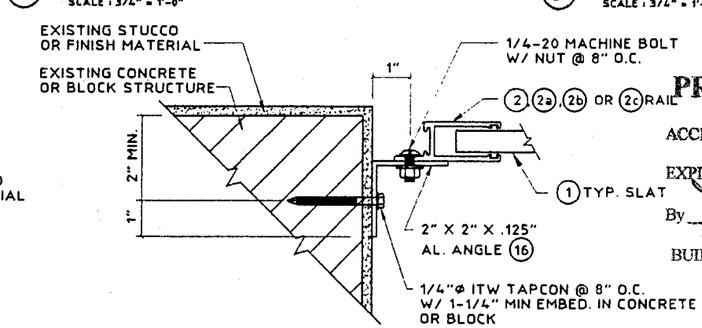

G INSIDE MOUNT (PLAN)

SCALE : 3" = 1'-0"

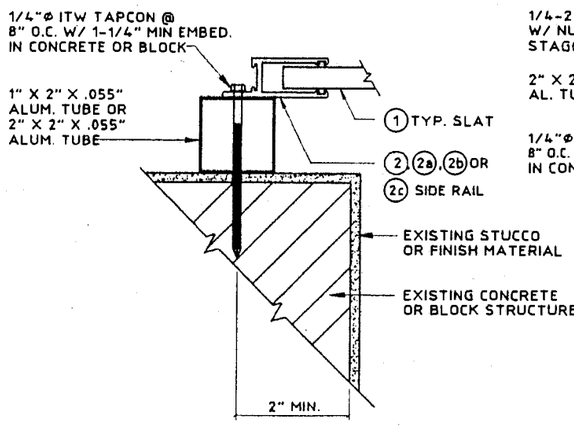

H BUILD-OUT MOUNT (PLAN)

SCALE : 3" = 1'-0"

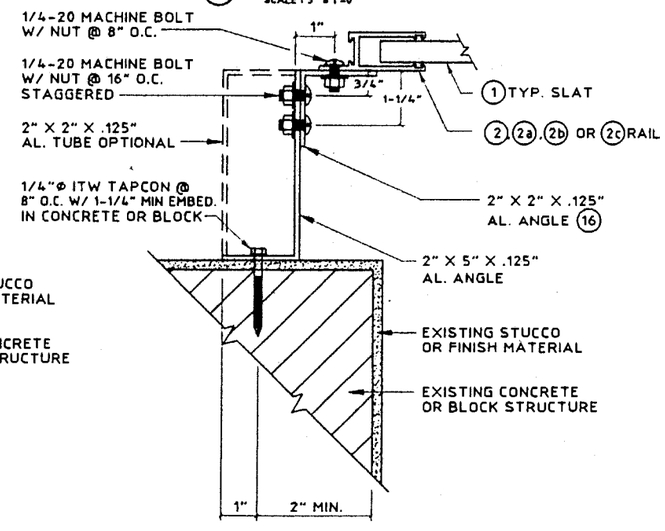

I BUILD-OUT MOUNT (PLAN)

SCALE : 3" = 1'-0"

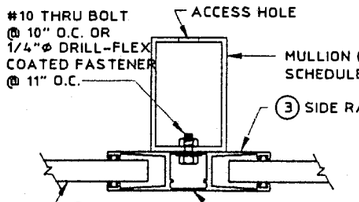

J

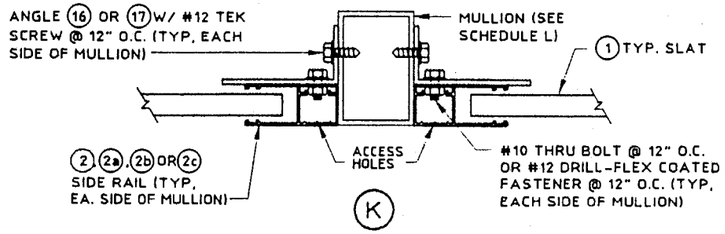

K

SIDE RAIL TO MULLION DETAILS

SCALE : 3" = 1'-0"

PRODUCT RENEWED

ACCEPTANCE No. 00-0327.05

EXPIRATION DATE 04/25/03

By _____

PRODUCT CONTROL DIVISION

BUILDING CODE COMPLIANCE OFFICE

APPROVED AS COMPLYING WITH THE SOUTH FLORIDA BUILDING CODE

DATE APRIL 24 19 97

BY _____

PRODUCT CONTROL DIVISION

BUILDING CODE COMPLIANCE OFFICE

ACCEPTANCE NO. 96-1003.02

KNEZEVICH & ASSOCIATES, INC.
CONSULTING ENGINEERS & PRODUCT TESTING
641 MOKENA DRIVE
MIAMI SPRINGS, FL 33166
PHONE: (305) 883-9571
FAX: (305) 883-9572
2701 W. OAKLAND PK. BLVD.
SUITE 240
FT. LAUDERDALE, FL 33311
PHONE: (954) 677-9500

COPYRIGHT 1996 KNEZEVICH & ASSOCIATES, INC.

ROLL-UP SHUTTER

HURST AWNING CO.

5795 N.W. 36TH AVE.
MIAMI, FL. 33142
(305) 635-0900

revisions			
no	date	by	description
1	8-22-96		RENEWAL OF 95-51

V.J. KNEZEVICH
PROFESSIONAL ENGINEER
FL License No:
PE 0010983

OCT - 1 1996

date	8-22-96
scale AS NOTED	drawn by J.W. HILL
design by VJK	checked by VJK
drawing no.	96-380
sheet 3 of 13	

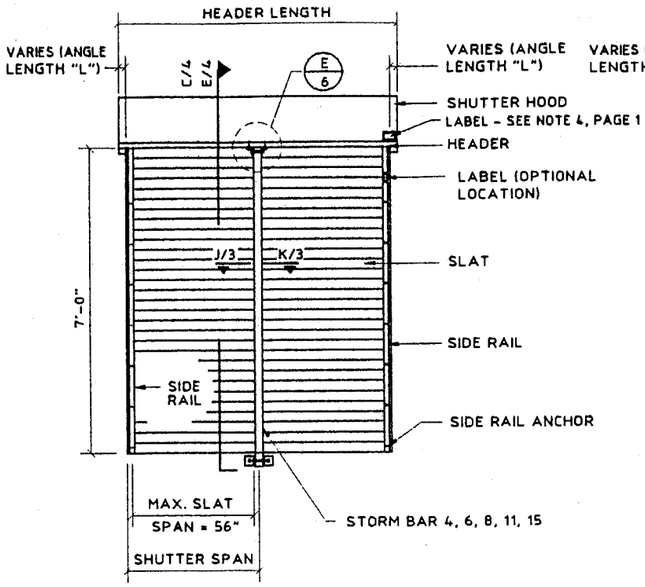

Ⓐ FACE MOUNT & BUILD OUT ELEVATION
N.T.S.

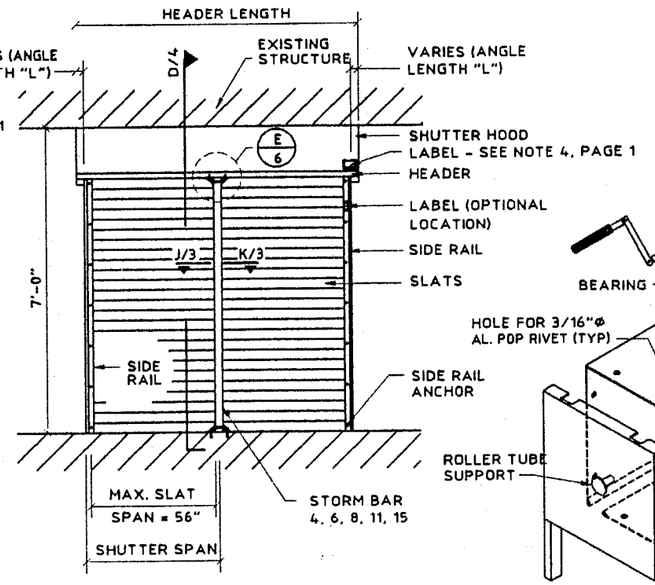

Ⓑ INSIDE MOUNT ELEVATION
N.T.S.

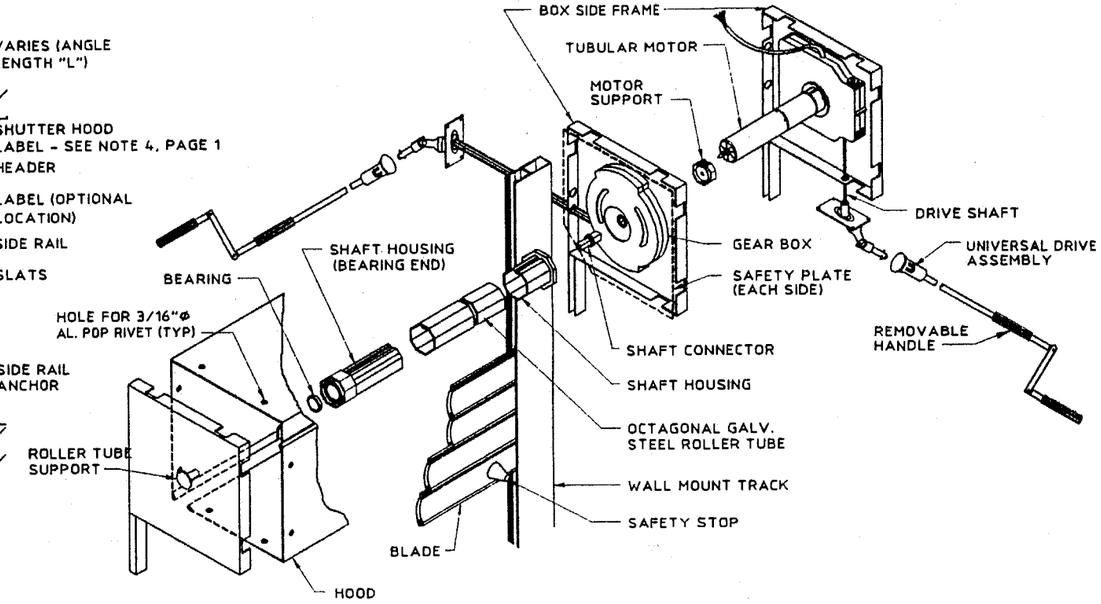

ISOMETRIC OF CAST HEADER ASSEMBLY
N.T.S.

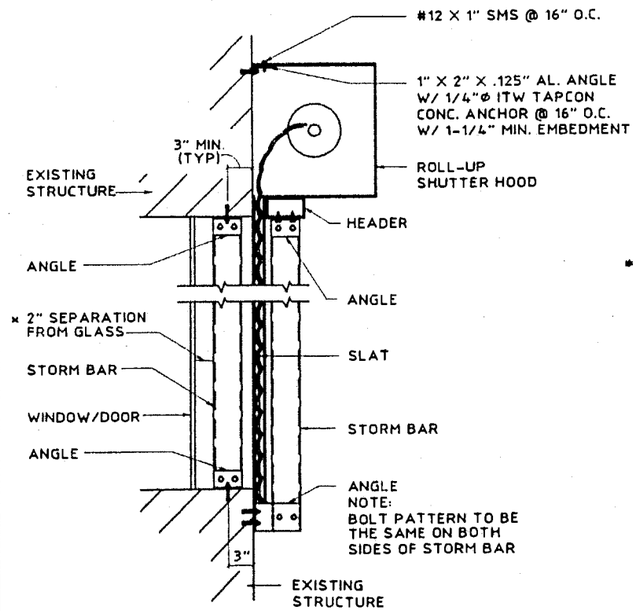

Ⓒ FACE MOUNT SECTION W/ STORM BAR
SCALE : 3/4" = 1'-0"

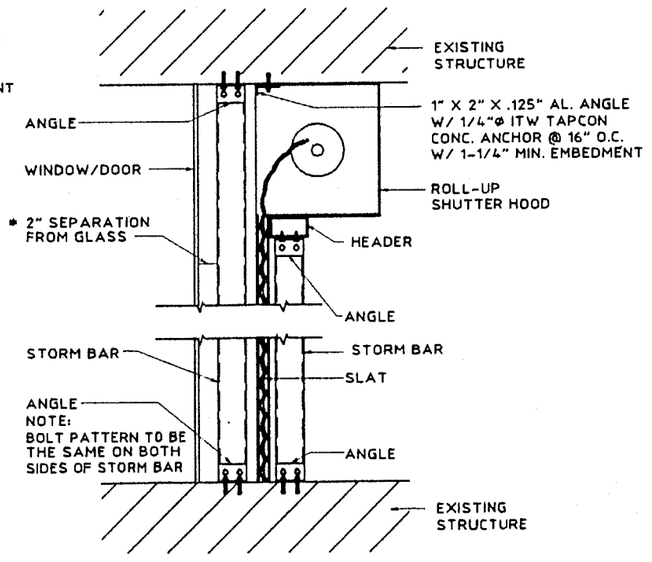

Ⓓ INSIDE MOUNT SECTION W/ STORM BAR
SCALE : 3/4" = 1'-0"

* 1-1/2" SEPARATION MAY BE USED WHEN POSITIVE LOADED STORM BARS FROM SCHEDULE G & J ARE USED

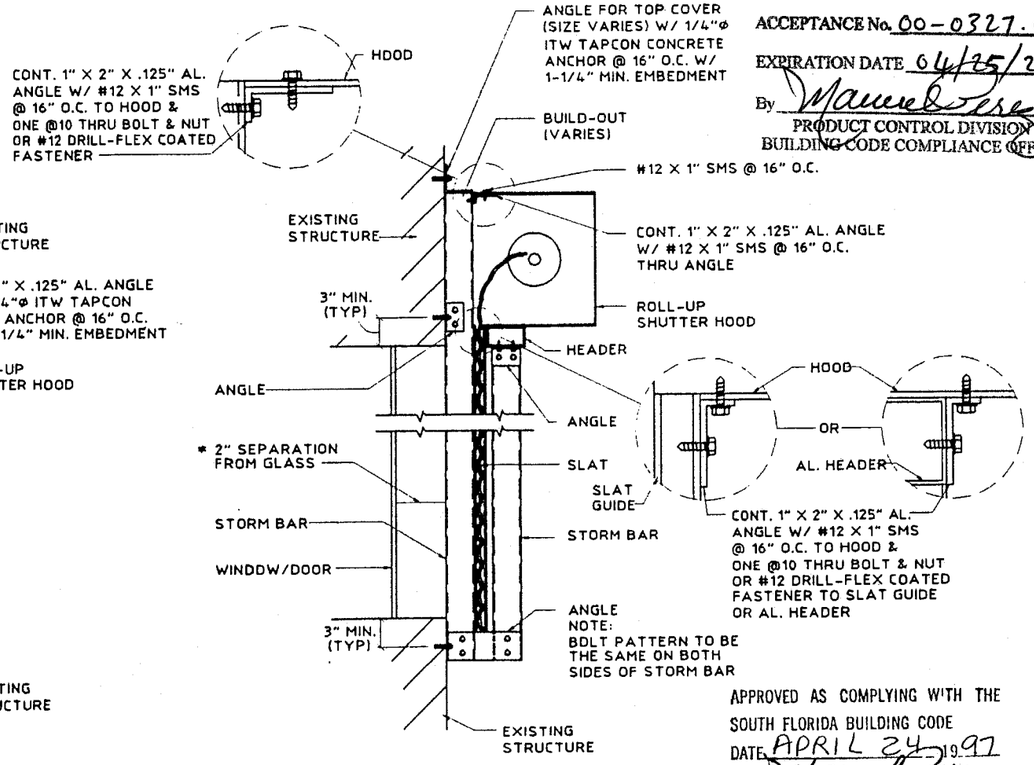

Ⓔ BUILD-OUT SECTION W/ STORM BAR
SCALE : 3/4" = 1'-0"

PRODUCT RENEWED

ACCEPTANCE No. 00-0327.05

EXPIRATION DATE 04/25/2003

By _____
PRODUCT CONTROL DIVISION
BUILDING CODE COMPLIANCE OFFICE

APPROVED AS COMPLYING WITH THE SOUTH FLORIDA BUILDING CODE

DATE APRIL 24 1997

BY _____
PRODUCT CONTROL DIVISION
BUILDING CODE COMPLIANCE OFFICE

ACCEPTANCE NO. 96-1003.02

KNEZEVICH & ASSOCIATES, INC.
CONSULTING ENGINEERS & PRODUCT TESTING
641 MOKENA DRIVE, MIAMI SPRINGS, FL 33166, PHONE: (305) 883-9571, FAX: (305) 883-9572
2701 W. OAKLAND PK. BLVD. SUITE 240, FT. LAUDERDALE, FL 33311, PHONE: (954) 677-9500

COPYRIGHT 1996 KNEZEVICH & ASSOCIATES, INC.

ROLL-UP SHUTTER

HURST AWNING CO.
5795 N.W. 36TH AVE.
MIAMI, FL 33142
(305) 635-0900

revisions

no	date	by	description
1	8-22-96		RENEWAL OF 95-51

V.J. KNEZEVICH
PROFESSIONAL ENGINEER
FL License No: PE 0070983

OCT - 1 1996

date 8-22-96

scale AS NOTED | drawn by J.W. HILL
design by VJK | checked by VJK

drawing no. 96-380

sheet 4 of 13

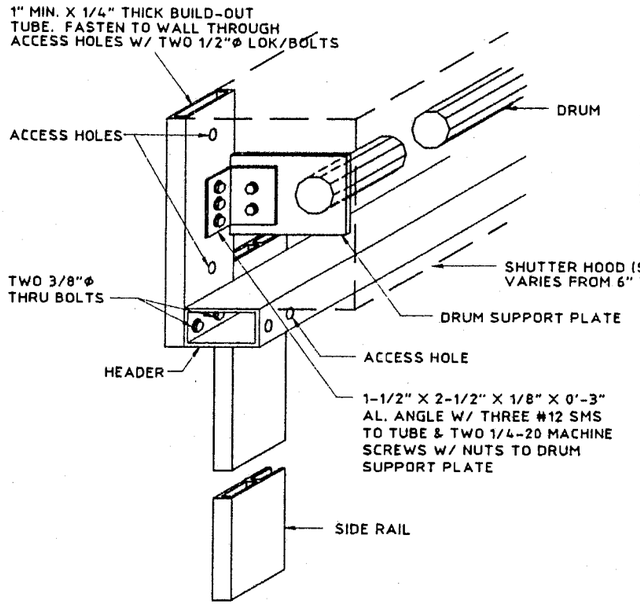

Ⓐ DRUM SUPPORT & HEADER TO BUILD-OUT DETAIL

SCALE : 1-1/2" = 1'-0"

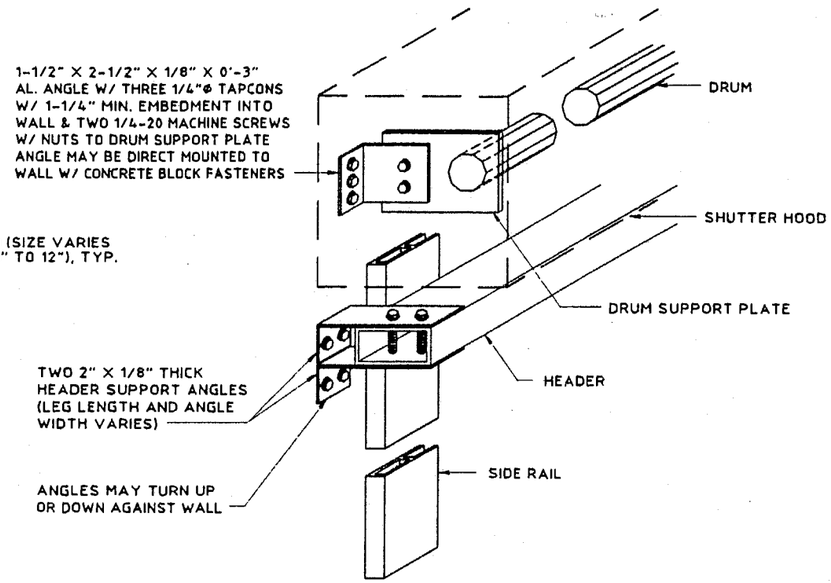

Ⓑ ALT. DRUM SUPPORT & HEADER TO WALL DETAIL

SCALE : 1-1/2" = 1'-0"

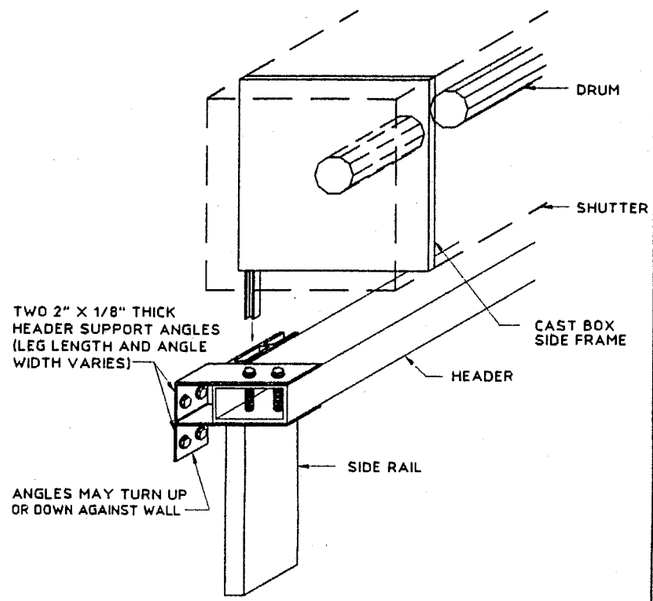

Ⓒ CAST DRUM SUPPORT & HEADER DETAIL

SCALE : 1-1/2" = 1'-0"

SLAT SPAN - SCHEDULE B

✱ FOR INSTALLATIONS ≤ 30'-0": FOR SLAT SPANS ≤ 42" SEPARATION FROM GLASS SHALL BE 3" MIN.
FOR SLAT SPANS > 42" ≤ 56" SEPARATION FROM GLASS SHALL BE 3.25" MIN.

FOR INSTALLATIONS > 30'-0": USE MIN. SEPARATION FROM GLASS INDICATED IN SCHEDULE BELOW.

NEGATIVE DESIGN LOAD (P.S.F.)	SINGLE SPAN	MIN. SEPERATION FROM GLASS	TWO (2) SPANS	MIN. SEPERATION FROM GLASS	THREE (3) OR MORE SPANS	MIN. SEPERATION FROM GLASS
	TOTAL SLAT SPAN (FT-IN)		TOTAL SLAT SPAN (FT-IN)		TOTAL SLAT SPAN (FT-IN)	
20.0	4 - 8	✱	4 - 8	✱	4 - 8	✱
30.0	4 - 8	✱	4 - 8	✱	4 - 8	✱
40.0	4 - 8	✱	4 - 8	✱	4 - 8	✱
50.0	4 - 8	✱	4 - 8	✱	4 - 8	✱
60.0	4 - 8	✱	4 - 8	✱	4 - 8	✱
70.0	4 - 6	✱	4 - 8	✱	4 - 8	✱
80.0	4 - 3	✱	4 - 5	✱	4 - 8	✱
90.0	4 - 1	2.96	4 - 2	1.93	4 - 6	2.47
100.0	4 - 0	2.78	4 - 0	1.86	4 - 3	2.34
110.0	3 - 9	2.64	3 - 9	1.80	4 - 1	2.24
120.0	3 - 7	2.52	3 - 7	1.75	3 - 11	2.15
130.0	3 - 6	2.42	3 - 6	1.70	3 - 9	2.08
140.0	3 - 4	2.33	3 - 4	1.67	3 - 7	2.01
150.0	3 - 3	2.25	3 - 3	1.64	3 - 6	1.96
160.0	3 - 2	2.19	3 - 2	1.61	3 - 5	1.91
170.0	3 - 0	2.13	3 - 0	1.59	3 - 3	1.87
180.0	2 - 11	2.08	2 - 11	1.56	3 - 2	1.83
190.0	2 - 10	2.03	2 - 10	1.55	3 - 1	1.80
200.0	2 - 9	1.99	2 - 9	1.53	3 - 0	1.77
210.0	2 - 9	1.95	2 - 9	1.51	2 - 11	1.74
220.0	2 - 8	1.92	2 - 8	1.50	2 - 11	1.72
230.0	2 - 7	1.89	2 - 7	1.49	2 - 10	1.70

NOTE: INTERPOLATE FOR SLAT SPANS AND DEFLECTION BETWEEN THOSE SHOWN.

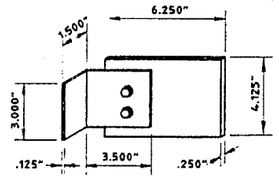

DRUM SUPPORT PLATE DETAIL

SCALE : 1-1/2" = 1'-0"

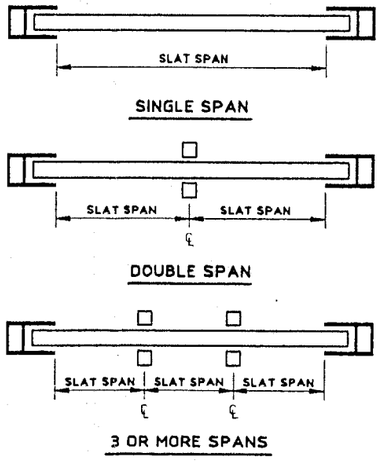

SPAN LAYOUTS

APPROVED AS COMPLYING WITH THE SOUTH FLORIDA BUILDING CODE
DATE APRIL 24 1997
BY Manuel Perez
PRODUCT CONTROL DIVISION
BUILDING CODE COMPLIANCE OFFICE
ACCEPTANCE NO. 96-1003.02

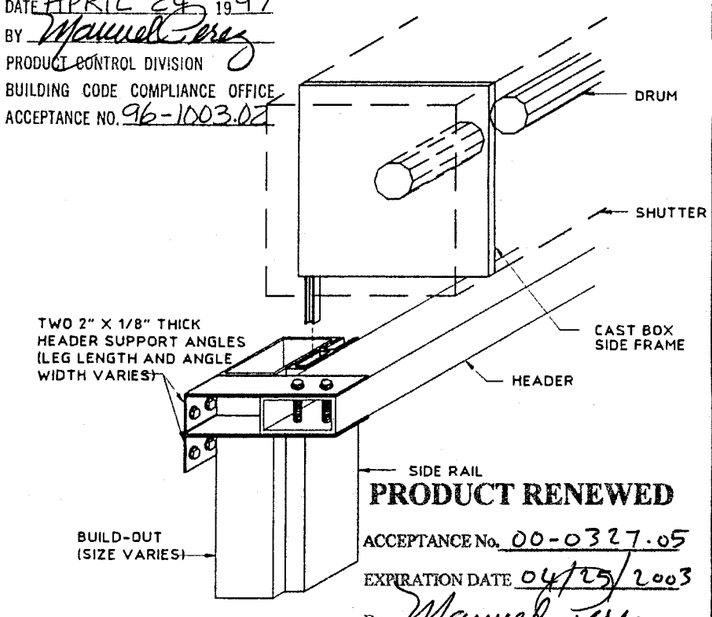

PRODUCT RENEWED

ACCEPTANCE No. 00-0327.05
EXPIRATION DATE 04/25/2003
By Manuel Perez
PRODUCT CONTROL DIVISION
BUILDING CODE COMPLIANCE OFFICE

Ⓓ CAST DRUM SUPPORT & HEADER DETAIL W/ BUILD-OUT

SCALE : 1-1/2" = 1'-0"

KNEZEVICH & ASSOCIATES, INC.
CONSULTING ENGINEERS & PRODUCT TESTING
6141 MOKENA DRIVE MIAMI SPRINGS, FL 33166 PHONE: (305) 883-9571 FAX: (305) 883-9572
2701 W. OAKLAND PK. BLVD. SUITE 240 FT. LAUDERDALE, FL 33311 PHONE: (954) 677-9500
COPYRIGHT 1996 KNEZEVICH & ASSOCIATES, INC.

ROLL-UP SHUTTER

HURST AWNING CO.
5795 N.W. 36TH AVE.
MIAMI, FL. 33142
(305) 635-0900

revisions

no	date	by	description
1	8-22-96		RENEWAL OF 95-51

V.J. KNEZEVICH
PROFESSIONAL ENGINEER
FL License No: PE 0010983

OCT - 1 1996

date	8-22-96
scale AS NOTED	drawn by J.W. HILL
design by VJK	checked by VJK
drawing no.	96-380
sheet 5 of 13	

ANCHOR AND FASTENER - SCHEDULE C

Block B
Concrete C

RAWL LOK/BOLT - TENSION IN CONCRETE OR BLOCK
RAWL CALK-IN - TENSION IN CONCRETE OR BLOCK

ANCHOR TYPE	MATERIAL TYPE	STORM BAR & MULLION REACTION (POUNDS)	WALL MOUNT				ANGLE DIMENSIONS		STORM BAR, MULLION OR HEADER TO ANGLES	
			DIAMETER (INCHES)	EMBEDMENT DISTANCE (INCHES)	QUANTITY OF FASTENERS PER ANGLE	CONCRETE OR BLOCK EDGE DISTANCE (INCHES)	THICKNESS OF TWO (2) ANGLES (INCHES)	MIN. (L) LENGTH OF EACH ANGLE (INCHES)	NO. OF TEK SCREWS EA. LEG EACH ANGLE	SIZE OF TEK SCREWS
LOK/BOLT	B	600	0.250	1.125	1	3.0	0.125	3.00	2	#12
CALK-IN	B	850	0.375	1.250	1	4.5	0.125	4.08	3	#12
LOK/BOLT	B	1200	0.250	1.125	2	3.0	0.125	5.76	3	#12
LOK/BOLT	B	1200	0.250	1.125	2	3.0	0.250	4.00	3	#12
CALK-IN	B	1700	0.375	1.250	2	4.5	0.250	5.25	3	#12
CALK-LOK	C	2508	0.500	1.5 - 2.25	1	6.0	0.250	3.01	4	#14
LOK/BOLT	C	2700	0.375	1.625	2	4.5	0.250	5.25	4	#14
CALK-IN	C	4810	0.375	1.250	2	4.5	0.250	11.50	6	#14
LOK/BOLT	C	5015	0.500	2.250	2	6.0	0.250	11.50	7	#14

ANCHOR AND FASTENER - SCHEDULE D

Block B
Concrete C

RAWL LOK/BOLT - SHEAR IN CONCRETE OR BLOCK
RAWL CALK-IN - SHEAR IN CONCRETE OR BLOCK

ANCHOR TYPE	MATERIAL TYPE	STORM BAR & MULLION REACTION (POUNDS)	WALL MOUNT				ANGLE DIMENSIONS		STORM BAR, MULLION OR HEADER TO ANGLES	
			DIAMETER (INCHES)	EMBEDMENT DISTANCE (INCHES)	QUANTITY OF FASTENERS PER ANGLE	CONCRETE OR BLOCK EDGE DISTANCE (INCHES)	THICKNESS OF TWO (2) ANGLES (INCHES)	MIN. (L) LENGTH OF EACH ANGLE (INCHES)	NO. OF TEK SCREWS EA. LEG EACH ANGLE	SIZE OF TEK SCREWS
LOK/BOLT	B	318	0.250	1.125	2	1.25	0.125	SEE DETAIL (B) SHEET 6 of 13 FOR L	2	#12
CALK-LOK	B	635	0.250	.875 - 1.125	1	3.00	0.125		2	#12
LOK/BOLT	B	635	0.250	1.125	4	1.25	0.125		3	#12
LOK/BOLT	B	1270	0.250	1.125	2	3.00	0.125		3	#12
LOK/BOLT	C	1625	0.375	1.625	1	4.50	0.125		3	#12
CALK-IN	C	1800	0.375	.875	2	3.00	0.125		3	#12
LOK/BOLT	C	3250	0.375	1.625	2	4.50	0.125		5	#14
CALK-IN	C	4220	0.375	1.250	2	4.50	0.125		6	#14
CALK-LOK	C	5800	0.500	1.5 - 2.25	2	6.00	0.125		8	#14
LOK/BOLT	C	5800	0.375	1.625	4	4.50	0.125		8	#14

NUMBER OF STORM BARS	HEADER REACTION DETERMINATION SCHEDULE E HEADER REACTION EACH END (POUNDS)
1	.5 X ONE STORM BAR END REACTION
2	1 X ONE STORM BAR END REACTION
3 OR MORE	1.5 X ONE STORM BAR END REACTION

SEE SCHEDULE B & C ABOVE FOR ANGLE, ANCHOR AND FASTENER QUANTITY AND SIZE.

WOOD FASTENING NOTES:

GALVANIZED STEEL OR 410 STAINLESS STEEL W/ FLUOROCARBON COATING LAG SCREW FOR WOOD, MAY BE USED AT LOADS, QUANTITY & EMBEDMENT INDICATED FOR BLOCK OR CONCRETE. EMBEDMENT SHALL BE AT THE CENTER OF A PRIMARY FRAMING MATERIAL SUCH AS A 2 X WOOD STUD OR A 2 X WOOD HEADER OR SILL PLATE.

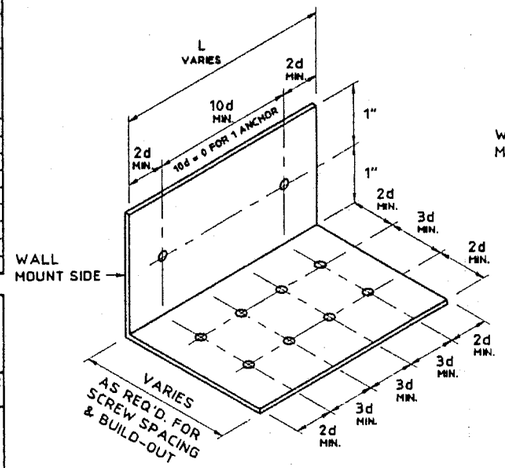

(A) TENSION CONNECTION TO WALL FOR STORM BAR, HEADER, OR MULLION

N.T.S.

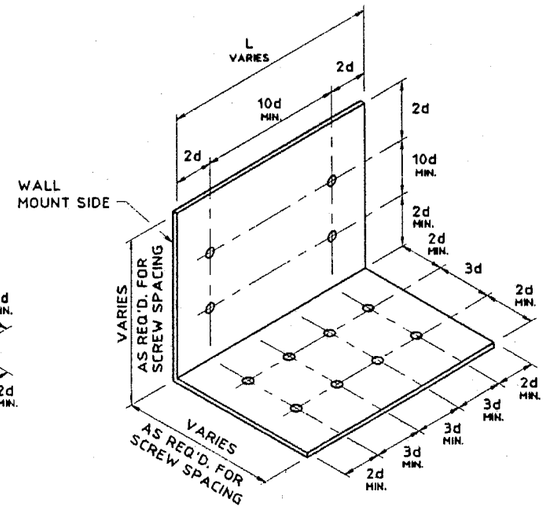

(B) SHEAR CONNECTION TO FLOOR OR CEILING FOR STORM BAR, HEADER, OR MULLION

N.T.S.

NOTE:

ANGLE ISOMETRIC DEPICTS MAXIMUM NUMBER OF ANCHOR BOLTS & TEK SCREWS, AND THEIR ARRANGEMENT. FOR LESS ANCHORS OR TEK SCREWS, ANY 3d OR 10d DIMENSIONS MAY BE = 0.

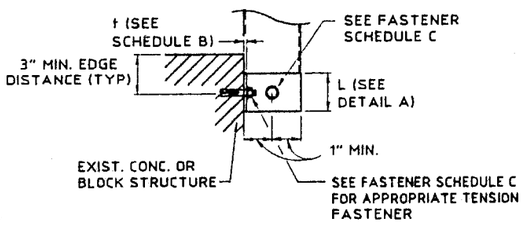

(C) STORM BAR/MULLION TO WALL DETAIL

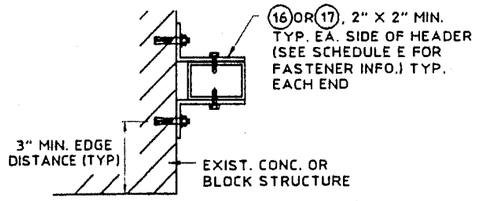

(D) HEADER TO WALL DETAIL

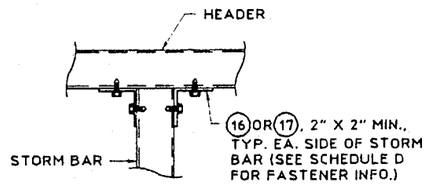

(E) HEADER TO STORM BAR (DETAIL Z)

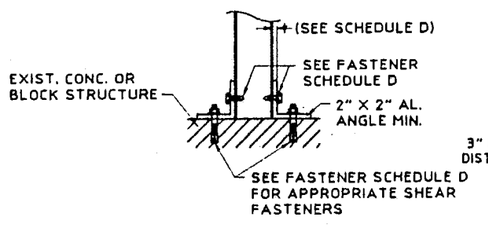

(F) STORM BAR/MULLION TO FLOOR/CEILING DETAIL

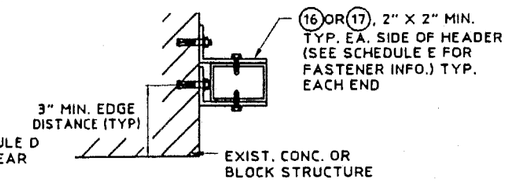

(G) HEADER TO WALL DETAIL

STORM BAR/HEADER CONNECTION DETAILS

SCALE: 1-1/2" = 1'-0"

PRODUCT RENEWED

ACCEPTANCE No. 00-0327.05

EXPIRATION DATE 04/25/2003

By _____
PRODUCT CONTROL DIVISION
BUILDING CODE COMPLIANCE OFFICE

APPROVED AS COMPLYING WITH THE SOUTH FLORIDA BUILDING CODE

DATE APRIL 24 1997

BY _____
PRODUCT CONTROL DIVISION
BUILDING CODE COMPLIANCE OFFICE

ACCEPTANCE NO. 96-1003.02

KNEZEVICH & ASSOCIATES, INC.
CONSULTING ENGINEERS & PRODUCT TESTING
641 MOKENA DRIVE MIAMI SPRINGS, FL 33166 PHONE: (305) 883-9571 FAX: (305) 883-9572
2701 W. OAKLAND PK. BLVD. SUITE 240 FT. LAUDERDALE, FL 33311 PHONE: (954) 677-9500

COPYRIGHT 1996 KNEZEVICH & ASSOCIATES, INC.

ROLL-UP SHUTTER

HURST AWNING CO.
5795 N.W. 36TH AVE.
MIAMI, FL. 33142
(305) 635-0900

revisions

no	date	by	description
1	8-22-96		RENEWAL OF 95-51

V.J. KNEZEVICH
PROFESSIONAL ENGINEER
FL License No: PE 0010983

OCT - 1 1996

date	8-22-96
scale AS NOTED	drawn by J.W. HILL
design by VJK	checked by VJK
drawing no.	96-380
sheet 6 of 13	

EXTERIOR STORM BAR SPAN SCHEDULE (F) - MULTIPLE SPAN CONDITION (2 SPANS)

NEGATIVE DESIGN LOAD (P.S.F.)	SLAT SPAN OR STORM BAR SPACING (IN)	STORM BARS - MAX. LENGTH (INCHES)									
		STORM BAR TYPE									
		④ 1.5" x 3"	④ END REACTION (POUNDS)	⑥ 2" x 3"	⑥ END REACTION (POUNDS)	⑧ 2" x 4"	⑧ END REACTION (POUNDS)	⑪ 2" x 5"	⑪ END REACTION (POUNDS)	⑮ 2" x 9"	⑮ END REACTION (POUNDS)
40	40	113	784	120	944	120	1121	185	1284	231	1607
	46	106	844	120	1014	120	1206	173	1382	216	1723
	52	100	899	120	1081	120	1285	163	1474	203	1832
	58	94	951	113	1143	120	1360	155	1560	192	1935
50	32	113	784	120	943	120	1121	185	1284	231	1607
	38	104	858	120	1031	120	1226	170	1405	212	1751
	44	97	925	116	1112	120	1323	159	1517	197	1884
	50	91	989	109	1188	120	1414	149	1622	185	2008
	56	86	1049	104	1260	120	1500	142	1721	175	2125
60	26	114	775	120	932	120	1108	187	1269	234	1589
	32	103	863	120	1038	120	1234	169	1414	211	1762
	38	95	944	114	1134	120	1349	156	1547	194	1920
	44	89	1018	107	1223	120	1456	146	1670	180	2066
	50	83	1087	100	1306	119	1555	137	1785	169	2202
	56	79	1153	95	1385	113	1649	130	1894	160	2330
70	21	116	759	120	913	120	1085	193	1242	239	1557
	27	103	863	120	1037	120	1233	169	1414	211	1761
	33	94	956	113	1149	120	1367	154	1568	191	1944
	39	87	1041	104	1251	120	1489	143	1709	176	2111
	45	81	1120	97	1346	116	1603	133	1840	164	2266
	51	76	1195	92	1434	109	1709	125	1962	154	2411
	56	72	1265	87	1518	104	1809	119	2078	146	2548
80	18	120	737	120	887	120	1053	196	1206	246	1514
	24	104	858	120	1031	120	1226	170	1405	212	1751
	30	93	964	112	1156	120	1378	153	1581	190	1960
	36	85	1060	103	1274	120	1516	140	1740	173	2148
	42	79	1149	95	1379	113	1643	130	1887	160	2322
	48	74	1231	89	1478	106	1762	122	2023	150	2483
	54	70	1309	84	1571	100	1873	115	2152	141	2634
90	15	120	710	120	854	120	1014	202	1161	255	1460
	21	105	848	120	1020	120	1213	172	1390	214	1733
	27	93	968	112	1164	120	1385	152	1586	189	1968
	33	84	1076	101	1292	120	1538	136	1766	171	2178
	39	78	1174	93	1409	111	1679	128	1928	157	2370
	45	72	1264	87	1518	104	1809	119	2078	146	2547
	51	68	1349	82	1619	98	1931	112	2218	137	2713
100	12	120	677	120	815	120	968	211	1107	266	1396
	18	106	836	120	1005	120	1195	174	1369	218	1708
	24	93	970	111	1165	120	1387	152	1591	189	1971
	30	83	1088	100	1307	119	1556	137	1786	169	2203
	36	76	1195	92	1435	109	1710	125	1964	154	2413
	42	71	1294	85	1553	101	1852	116	2127	143	2606
	48	66	1386	80	1662	95	1984	109	2280	133	2785
110	22	93	969	112	1164	120	1385	152	1589	189	1969
	26	86	1057	103	1269	120	1511	141	1735	174	2142
	30	80	1139	96	1367	114	1628	131	1870	162	2301
	34	75	1215	90	1459	108	1738	124	1996	152	2451
	38	71	1287	85	1545	102	1841	117	2116	143	2592
	42	68	1356	81	1626	97	1940	112	2225	136	2725
	46	65	1421	78	1702	93	2033	107	2337	130	2852
120	20	93	965	112	1160	120	1386	153	1583	189	1962
	24	85	1061	102	1275	120	1518	140	1742	173	2151
	28	79	1150	95	1381	113	1645	130	1889	160	2324
	32	74	1232	89	1479	106	1763	122	2025	150	2485
	36	70	1310	84	1572	100	1874	115	2153	141	2636
	40	67	1383	80	1658	95	1979	109	2275	134	2779
	44	64	1453	76	1739	91	2079	105	2390	128	2915
130	18	94	960	113	1154	120	1373	154	1575	190	1952
	22	85	1064	102	1278	120	1522	140	1747	172	2156
	26	79	1160	94	1393	112	1659	129	1905	159	2343
	30	73	1248	88	1498	105	1786	120	2051	148	2516
	34	69	1331	83	1597	99	1904	113	2186	139	2677
	38	65	1409	78	1688	94	2016	108	2317	131	2829
	42	62	1483	75	1775	89	2123	103	2440	125	2974
140	17	94	953	113	1145	120	1363	155	1563	192	1938
	21	85	1066	102	1280	120	1524	139	1749	172	2159
	25	78	1168	94	1402	112	1671	128	1916	158	2359
	29	73	1262	87	1515	104	1806	119	2075	146	2543
	33	68	1350	82	1620	97	1932	112	2220	137	2715
	37	64	1433	77	1717	92	2051	106	2356	129	2877
	41	61	1512	73	1808	88	2164	101	2486	123	3030

NOTE: INTERPOLATE FOR STORM BAR SPANS AND REACTIONS BETWEEN THOSE SHOWN ON THIS SHEET

EXTERIOR STORM BAR SPAN SCHEDULE (F) - MULTIPLE SPAN CONDITION (2 SPANS)

NEGATIVE DESIGN LOAD (P.S.F.)	SLAT SPAN OR STORM BAR SPACING (IN)	STORM BARS - MAX. LENGTH (INCHES)									
		STORM BAR TYPE									
		④ 1.5" x 3"	④ END REACTION (POUNDS)	⑥ 2" x 3"	⑥ END REACTION (POUNDS)	⑧ 2" x 4"	⑧ END REACTION (POUNDS)	⑪ 2" x 5"	⑪ END REACTION (POUNDS)	⑮ 2" x 9"	⑮ END REACTION (POUNDS)
150	15	95	945	114	1135	120	1351	156	1549	193	1922
	19	85	1066	102	1280	120	1524	140	1749	172	2159
	23	78	1175	93	1411	111	1681	127	1930	157	2372
	27	72	1275	86	1531	103	1824	118	2096	145	2568
	31	67	1369	81	1641	96	1958	111	2250	135	2750
	35	63	1456	76	1743	91	2084	104	2395	127	2921
	39	60	1539	72	1839	86	2202	99	2533	121	3082
160	14	96	934	115	1123	120	1336	157	1532	195	1902
	18	85	1064	102	1278	120	1522	140	1747	172	2156
	22	77	1181	93	1418	110	1689	127	1939	156	2384
	26	71	1287	86	1545	102	1841	117	2115	143	2591
	30	66	1385	80	1661	95	1982	109	2278	134	2783
	34	63	1478	75	1768	90	2115	103	2431	125	2963
	38	58	1614	69	1927	82	2310	95	2657	115	3229
170	13	97	923	117	1109	120	1320	159	1513	198	1879
	17	85	1062	102	1275	120	1519	140	1743	173	2151
	21	77	1185	92	1423	110	1696	126	1947	155	2393
	25	71	1298	85	1557	101	1857	116	2133	142	2612
	29	66	1401	79	1679	94	2005	108	2305	132	2814
	33	62	1498	74	1792	88	2144	102	2465	124	3003
	37	58	1589	70	1898	84	2275	96	2616	117	3180
180	12	98	910	118	1094	120	1301	161	1492	200	1854
	16	86	1058	103	1271	120	1514	140	1737	173	2145
	20	77	1189	92	1428	110	1701	126	1953	155	2400
	24	70	1307	84	1569	100	1870	115	2149	141	2631
	28	65	1416	78	1697	93	2026	107	2329	131	2843
	32	61	1518	73	1814	87	2172	100	2497	122	3041
	36	58	1613	69	1925	82	2308	95	2655	115	3226
190	11	100	896	120	1077	120	1281	164	1469	204	1826
	15	86	1054	103	1266	120	1507	141	1730	174	2136
	19	77	1192	92	1431	109	1705	126	1958	155	2406
	23	70	1316	84	1580	100	1883	115	2164	140	2648
	27	65	1430	77	1713	92	2047	106	2352	129	2871
	31	60	1536	72	1836	86	2198	99	2528	121	3077
	35	57	1635	68	1951	81	2341	94	2692	114	3270
200	10	101	881	120	1059	120	1259	166	1443	207	1796
	14	86	1049	104	1260	120	1500	142	1721	175	2125
	18	76	1194	92	1434	109	1708	126	1962	154	2410
	22	69	1324	83	1589	99	1895	114	2177	140	2664
	26	64	1443	77	1728	92	2066	105	2374	128	2896
	30	60	1554	72	1857	85	2224	98	2557	119	3111
	34	56	1657	67	1976	80	2372	92	2728	112	3312
210	15	81	1121	97	1347	116	1604	133	1841	164	2268
	18	74	1231	89	1478	106	1761	122	2023	150	2482
	21	69	1332	83	1598	99	1906	113	2190	139	2679
	24	65	1426	77	1708	93	2040	106	2345	130	2862
	27	61	1514	73	1811	87	2167	101	2492	122	3035
	30	58	1598	69	1908	83	2287	96	2631	116	3198
	33	55	1678	66	2001	79	2402	91	2763	111	3353
220	14	81	1118	98	1343	116	1600	133	1836	164	2262
	17	74	1233	89	1480	106	1764	122	2026	149	2486
	20	69	1339	82	1606	98	1915	113	2201	138	2692
	23	64	1437	77	1720	92	2056	106	2363	129	2883
	26	61	1529	72	1827	87	2188	100	2515	121	3062
	29	58	1615	69	1928	82	2312	95	2659	115	3231
	32	55	1698	65	2024	79	2431	90	2796	110	3392
230	14	81	1115	98	1339	117	1595	134	1831	165	2255
	17	74	1235	89	1482	106	1767	122	2029	149	2490
	20	68	1345	82	1614	98	1924	112	2211	137	2704
	23	64	1447	76	1732	91	2070	105	2380	128	2903
	26	60	1542	72	1843	86	2207	99	2538	120	3088
	29	57	1632	68	1947	82	2336	94	2687	114	3264
	32	54	1717	65	2047	78	2459	89	2829	108	3430

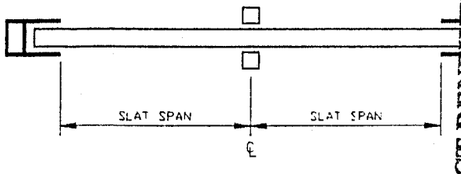

DOUBLE SPAN LAYOUT

PRODUCT RENEWED
ACCEPTANCE No. 00-0327.05
EXPIRATION DATE 04/29/2002
By
PRODUCT CONTROL DIVISION
BUILDING CODE COMPLIANCE OFFICE

APPROVED AS COMPLYING WITH THE SOUTH FLORIDA BUILDING CODE
DATE APRIL 24 1997
BY
PRODUCT CONTROL DIVISION
BUILDING CODE COMPLIANCE OFFICE
ACCEPTANCE NO. 96-1003.02

KNEZEVICH & ASSOCIATES, INC.
CONSULTING ENGINEERS & PRODUCT TESTING
6411 MOKENA DRIVE MIAMI SPRINGS, FL 33166
PHONE: (305) 883-9571 FAX: (305) 883-9572
2701 W. OAKLAND PK. BLVD. SUITE 240 FT. LAUDERDALE, FL 33311
PHONE: (954) 677-9500

COPYRIGHT 1996 KNEZEVICH & ASSOCIATES, INC.

ROLL-UP SHUTTER

HURST AWNING CO.
5795 N.W. 36TH AVE.
MIAMI, FL. 33142
(305) 635-0900

revisions			
no	date	by	description
1	8-22-96		RENEWAL OF 95-51

V.J. KNEZEVICH
PROFESSIONAL ENGINEER
FL License No: PE 0010983

OCT -1 1996

date 8-22-96	
scale AS NOTED	drawn by J.W. HILL
design by VJK	checked by VJK
drawing no. 96-380	
sheet 7 of 13	

INTERIOR STORM BAR SPAN SCHEDULE (G) - MULTIPLE SPAN CONDITION (2 SPANS)

POSITIVE DESIGN LOAD (P.S.F.)	SLAT SPAN OR STORM BAR SPACING (IN)	STORM BARS - MAX. LENGTH (INCHES) SEPARATION FROM GLASS = 2"									
		STORM BAR TYPE									
		(4) 1.5" x 3"	(4) END REACTION (POUNDS)	(5) 2" x 3"	(5) END REACTION (POUNDS)	(7) 2" x 4"	(7) END REACTION (POUNDS)	(10) 2" x 5"	(10) END REACTION (POUNDS)	(14) 2" x 9"	(14) END REACTION (POUNDS)
40	40	99	689	95	659	113	787	130	905	188	1304
	46	96	765	92	732	109	874	126	1005	181	1448
	52	93	839	89	803	106	958	122	1102	172	1557
	56	90	910	86	871	103	1040	119	1196	163	1644
50	32	99	688	95	659	113	787	130	904	188	1304
	38	95	783	91	750	109	895	125	1029	180	1483
	44	92	874	88	837	105	999	120	1148	168	1601
	50	89	962	85	921	101	1099	116	1264	157	1706
	56	86	1048	80	975	98	1197	113	1376	149	1806
60	26	100	677	95	646	114	773	131	889	189	1282
	32	95	791	91	757	108	903	124	1039	179	1497
	38	91	899	87	861	104	1027	119	1181	164	1631
	44	87	1004	83	948	100	1147	115	1318	153	1755
	50	83	1087	77	1010	96	1246	111	1451	143	1870
	56	79	1153	73	1069	90	1319	106	1549	136	1979
70	21	101	657	96	629	115	750	132	863	191	1244
	27	95	790	91	756	108	903	124	1038	179	1496
	33	90	917	86	877	103	1047	118	1204	162	1652
	39	86	1037	81	969	99	1185	114	1362	150	1794
	45	81	1120	75	1040	93	1282	109	1505	139	1925
	51	76	1195	71	1106	87	1364	103	1604	131	2048
	56	73	1265	67	1169	83	1442	97	1698	124	2164
80	18	102	630	98	603	117	719	134	827	193	1192
	24	95	783	91	750	108	895	125	1029	180	1483
	30	90	928	86	886	103	1060	118	1219	161	1665
	36	85	1060	79	986	98	1215	113	1398	147	1825
	42	79	1149	73	1065	91	1314	106	1543	136	1972
	48	74	1231	69	1139	85	1435	100	1654	127	2109
	54	70	1309	65	1209	80	1491	94	1758	120	2238
90	15	104	597	100	571	119	681	137	784	197	1129
	21	95	771	91	738	109	881	125	1013	181	1460
	27	90	934	86	894	102	1067	118	1227	160	1672
	33	84	1076	78	999	97	1233	112	1428	145	1851
	39	78	1174	72	1087	89	1341	104	1576	133	2013
	45	72	1264	67	1169	83	1442	97	1698	124	2164
	51	68	1349	63	1245	78	1535	92	1812	116	2305
100	12	106	556	102	534	122	637	140	733	201	1056
	18	96	755	92	722	110	862	126	991	182	1429
	24	90	936	86	896	102	1069	118	1229	160	1675
	30	83	1088	77	1011	95	1247	111	1452	143	1872
	36	76	1195	71	1107	87	1365	103	1606	131	2050
	42	71	1294	65	1195	81	1475	95	1738	121	2214
	48	66	1386	61	1278	76	1576	89	1861	113	2366
110	22	90	934	86	894	102	1067	118	1227	160	1673
	26	86	1057	80	983	98	1211	113	1392	147	1819
	30	80	1139	74	1056	91	1302	107	1529	137	1955
	34	75	1215	70	1124	86	1387	101	1632	129	2082
	38	71	1287	66	1189	81	1467	96	1728	122	2202
	42	68	1356	63	1250	77	1542	91	1820	116	2315
	46	65	1421	60	1309	74	1614	87	1908	111	2423

NOTE: INTERPOLATE FOR STORM BAR SPANS AND REACTIONS BETWEEN THOSE SHOWN ON THIS SHEET.

PRODUCT RENEWED
ACCEPTANCE No. 00-0327.05
EXPIRATION DATE 04/25/2003
By _____
PRODUCT CONTROL DIVISION
BUILDING CODE COMPLIANCE OFFICE

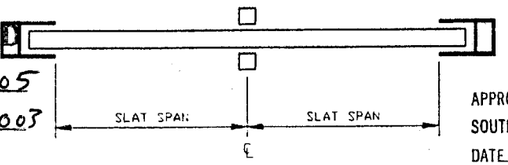

DOUBLE SPAN LAYOUT

APPROVED AS COMPLYING WITH THE SOUTH FLORIDA BUILDING CODE
DATE APRIL 24 1997
BY _____
PRODUCT CONTROL DIVISION
BUILDING CODE COMPLIANCE OFFICE
ACCEPTANCE NO. 96-1003.02

INTERIOR STORM BAR SPAN SCHEDULE (H) - MULTIPLE SPAN CONDITION (2 SPANS)

POSITIVE DESIGN LOAD (P.S.F.)	SLAT SPAN OR STORM BAR SPACING (IN)	STORM BARS - MAX. LENGTH (INCHES) SEPARATION FROM GLASS = 1-1/2"									
		STORM BAR TYPE									
		(4) 1.5" x 3"	(4) END REACTION (POUNDS)	(5) 2" x 3"	(5) END REACTION (POUNDS)	(7) 2" x 4"	(7) END REACTION (POUNDS)	(10) 2" x 5"	(10) END REACTION (POUNDS)	(14) 2" x 9"	(14) END REACTION (POUNDS)
40	40	83	579	80	554	95	662	110	761	158	1097
	46	80	643	77	616	92	735	106	845	152	1218
	52	78	705	75	675	89	806	103	926	148	1335
	56	76	765	73	733	87	874	100	1005	144	1449
50	32	83	579	80	554	95	661	110	761	158	1096
	38	80	659	76	630	91	752	105	865	151	1247
	44	77	735	74	704	88	840	101	966	146	1392
	50	75	809	71	775	85	924	98	1063	141	1532
	56	72	881	69	843	83	1006	95	1157	137	1668
60	26	84	569	80	545	96	650	110	748	159	1078
	32	80	665	76	637	91	760	105	874	151	1259
	38	76	756	73	724	87	864	100	993	144	1432
	44	74	844	70	808	84	964	97	1109	139	1598
	50	71	929	68	889	81	1061	94	1220	135	1758
	56	69	1011	66	968	79	1155	91	1328	131	1914
70	21	85	552	81	529	97	631	111	726	160	1046
	27	80	665	76	636	91	759	105	873	151	1258
	33	76	771	73	738	87	880	100	1012	143	1459
	39	73	872	70	835	83	996	96	1146	138	1651
	45	70	970	67	928	80	1108	92	1274	133	1836
	51	68	1064	65	1019	78	1216	89	1398	129	2015
	56	66	1156	63	1107	76	1321	87	1519	124	2164

INTERIOR STORM BAR SPAN SCHEDULE - MULTIPLE SPAN CONDITION (2 SPANS)

POSITIVE DESIGN LOAD (P.S.F.)	SLAT SPAN OR STORM BAR SPACING (IN)	(G) CONT. STORM BARS - MAX. LENGTH (INCHES) STORM BAR TYPE SEPARATION FROM GLASS = 2"				(H) CONT. STORM BARS - MAX. LENGTH (INCHES) STORM BAR TYPE SEPARATION FROM GLASS = 1-1/2"			
		(21) 1" x 2"	(21) END REACTION (POUNDS)	(22) 2" x 2"	(22) END REACTION (POUNDS)	(21) 1" x 2"	(21) END REACTION (POUNDS)	(22) 2" x 2"	(22) END REACTION (POUNDS)
40	40	69	461	74	516	59	410	62	434
	46	65	517	72	572	57	455	60	482
	52	61	551	70	629	55	499	59	529
	56	58	583	66	667	54	541	57	574
	64	55	613	63	700	52	583	56	616
	70	53	643	60	733	51	623	54	661
	76	51	670	58	763	50	663	52	703
50	32	69	480	74	516	59	410	62	434
	38	64	525	71	587	57	466	60	494
	44	59	567	68	649	54	520	58	551
	50	56	606	64	698	53	572	56	607
	56	53	642	60	732	51	623	54	660
	62	50	677	57	771	50	673	53	713
	68	48	710	55	807	48	710	52	764
60	26	70	475	75	507	59	403	63	427
	32	63	529	71	593	56	470	60	498
	38	58	578	67	662	54	539	57	567
	44	54	624	62	712	52	597	55	633
	50	51	666	58	759	50	657	53	696
	56	48	706	55	803	48	706	52	758
	62	46	745	52	845	46	745	51	818
70	21	71	465	75	492	60	391	63	414
	27	63	529	71	592	56	470	60	498
	33	58	586	66	670	54	545	57	578
	39	53	638	61	728	51	617	55	654
	45	50	686	57	781	50	686	53	727
	51	47	732	53	831	47	732	51	798
	56	44	775	50	878	44	775	50	867

KNEZEVICH & ASSOCIATES, INC.
CONSULTING ENGINEERS & PRODUCT TESTING
641 MOKENA DRIVE MIAMI SPRINGS, FL 33166 PHONE: (305) 883-9571 FAX: (305) 883-9572
2701 W. OAKLAND PK. BLVD. SUITE 240 FT. LAUDERDALE, FL 33311 PHONE: (954) 677-9500

COPYRIGHT 1996 KNEZEVICH & ASSOCIATES, INC.

ROLL-UP SHUTTER

HURST AWNING CO.
5795 N.W. 36TH AVE.
MIAMI, FL. 33142
(305) 635-0900

revisions			
no	date	by	description
1	8-22-96		RENEWAL OF 95-51

V.J. KNEZEVICH
PROFESSIONAL ENGINEER
FL License No: PE 0010983

OCT - 1 1996

date	8-22-96
scale AS NOTED	drawn by J.W. HILL
design by VJK	checked by VJK
drawing no. 96-380	
sheet 8 of 13	

EXTERIOR STORM BAR SPAN SCHEDULE (I) - MULTIPLE SPAN CONDITION (3 OR MORE SPANS)

NEGATIVE DESIGN LOAD (P.S.F.)	SLAT SPAN OR STORM BAR SPACING (IN)	STORM BARS - MAX. LENGTH (INCHES)									
		STORM BAR TYPE									
		④ 1.5" x 3"	④ END REACTION (POUNDS)	⑥ 2" x 3"	⑥ END REACTION (POUNDS)	⑧ 2" x 4"	⑧ END REACTION (POUNDS)	⑪ 2" x 5"	⑪ END REACTION (POUNDS)	⑮ 2" x 9"	⑮ END REACTION (POUNDS)
40	39	119	739	120	889	120	1056	195	1209	245	1518
	45	111	796	120	957	120	1138	182	1303	228	1630
	51	105	849	120	1021	120	1214	172	1392	214	1735
	56	99	900	120	1082	120	1286	163	1475	203	1834
50	35	113	784	120	943	120	1120	185	1283	231	1606
	41	105	851	120	1023	120	1217	172	1394	214	1738
	47	98	914	118	1098	120	1306	161	1498	200	1861
	53	93	972	111	1168	120	1390	152	1595	188	1976
	56	88	1028	106	1235	120	1470	144	1686	178	2084
60	31	110	809	120	973	120	1156	180	1325	225	1656
	37	101	887	120	1066	120	1268	165	1454	206	1808
	43	94	959	113	1152	120	1371	154	1572	191	1949
	49	88	1026	106	1232	120	1467	145	1683	179	2081
	55	83	1089	100	1308	119	1557	137	1788	169	2204
	56	79	1149	95	1379	113	1643	130	1887	160	2321
70	26	111	801	120	963	120	1144	181	1311	227	1639
	32	100	891	120	1072	120	1274	164	1461	205	1818
	38	92	974	111	1171	120	1393	152	1598	188	1980
	44	86	1051	103	1263	120	1503	141	1725	174	2131
	50	81	1123	97	1349	116	1606	133	1844	164	2271
	56	77	1191	92	1429	110	1703	126	1956	155	2403
80	22	113	787	120	946	120	1124	184	1288	231	1612
	28	100	891	120	1072	120	1275	164	1461	205	1818
	34	91	986	110	1184	120	1410	150	1617	186	2002
	40	85	1072	102	1288	120	1533	139	1760	171	2172
	46	79	1152	95	1384	113	1648	130	1893	160	2329
	52	74	1228	89	1474	107	1756	122	2017	150	2476
	56	71	1299	85	1559	101	1858	116	2135	142	2614
90	19	115	768	120	924	120	1098	188	1258	236	1575
	25	101	888	120	1067	120	1269	165	1455	205	1810
	31	91	994	109	1194	120	1421	149	1630	184	2018
	37	83	1090	100	1309	119	1558	137	1789	169	2206
	43	77	1178	93	1415	111	1685	127	1935	156	2379
	49	73	1261	87	1514	104	1804	119	2072	146	2541
	55	69	1339	82	1607	98	1916	113	2201	136	2692
100	16	118	746	120	897	120	1066	194	1221	243	1531
	22	101	881	120	1059	120	1259	166	1443	207	1796
	28	90	998	108	1200	120	1428	148	1638	183	2027
	34	82	1104	99	1326	118	1579	135	1813	166	2234
	40	76	1201	91	1442	109	1718	125	1974	153	2424
	46	71	1291	85	1550	102	1847	117	2122	143	2600
	52	67	1376	80	1650	96	1968	110	2262	134	2764
110	26	90	1001	108	1203	120	1431	148	1642	183	2032
	30	84	1079	101	1296	120	1544	138	1772	170	2186
	34	79	1153	95	1384	113	1649	130	1893	160	2329
	38	75	1222	90	1467	107	1748	123	2008	151	2464
	42	71	1287	85	1545	102	1842	117	2116	143	2592
	46	68	1350	82	1620	97	1932	112	2220	137	2714
	50	65	1410	78	1689	94	2017	108	2319	131	2831
120	23	90	1001	108	1203	120	1432	148	1643	183	2033
	27	83	1087	100	1305	119	1554	137	1784	169	2200
	31	78	1166	94	1400	112	1668	128	1915	158	2355
	35	74	1240	89	1489	106	1774	121	2038	149	2500
	39	70	1311	84	1573	100	1875	115	2155	141	2638
	43	67	1378	80	1652	96	1971	110	2266	134	2768
	47	64	1442	77	1726	92	2063	105	2372	128	2893
130	22	90	1000	108	1201	120	1430	146	1641	183	2030
	26	83	1092	100	1312	119	1562	136	1793	168	2211
	30	77	1177	93	1414	111	1684	127	1934	156	2377
	34	73	1257	87	1509	104	1799	120	2066	147	2533
	38	69	1332	83	1599	99	1906	113	2191	139	2680
	42	66	1404	79	1682	94	2009	108	2309	132	2819
	46	63	1472	75	1761	90	2106	103	2421	126	2952
140	20	90	997	109	1198	120	1426	146	1635	184	2024
	24	83	1096	99	1316	118	1568	136	1800	168	2218
	28	77	1187	92	1426	110	1699	126	1951	155	2397
	32	72	1272	86	1527	103	1821	118	2091	145	2563
	36	68	1352	82	1623	97	1935	112	2224	137	2719
	40	65	1428	77	1711	92	2044	106	2349	130	2867
	44	62	1500	74	1794	88	2147	101	2468	124	3007

NOTE: INTERPOLATE FOR STORM BAR SPANS AND REACTIONS BETWEEN THOSE SHOWN ON THIS SHEET

EXTERIOR STORM BAR SPAN SCHEDULE (I) - MULTIPLE SPAN CONDITION (3 OR MORE SPANS)

NEGATIVE DESIGN LOAD (P.S.F.)	SLAT SPAN OR STORM BAR SPACING (IN)	STORM BARS - MAX. LENGTH (INCHES)									
		STORM BAR TYPE									
		④ 1.5" x 3"	④ END REACTION (POUNDS)	⑥ 2" x 3"	⑥ END REACTION (POUNDS)	⑧ 2" x 4"	⑧ END REACTION (POUNDS)	⑪ 2" x 5"	⑪ END REACTION (POUNDS)	⑮ 2" x 9"	⑮ END REACTION (POUNDS)
150	18	91	992	109	1192	120	1419	149	1628	184	2015
	22	83	1099	99	1320	118	1572	136	1804	167	2224
	26	76	1196	92	1436	109	1711	125	1965	154	2414
	30	71	1286	86	1544	102	1841	117	2115	143	2590
	34	67	1371	80	1644	96	1962	110	2255	135	2756
	38	64	1451	76	1737	91	2077	105	2387	128	2911
	42	61	1527	73	1825	87	2185	100	2513	122	3059
160	17	91	987	110	1185	120	1411	150	1618	185	2004
	21	82	1100	99	1321	118	1574	135	1806	167	2226
	25	76	1204	91	1445	109	1722	125	1978	153	2429
	29	71	1299	85	1559	101	1859	116	2136	142	2615
	33	66	1389	80	1665	95	1987	109	2284	133	2790
	37	63	1473	75	1762	90	2106	103	2423	126	2954
	41	60	1553	71	1855	85	2222	96	2555	120	3109
170	16	92	979	110	1177	120	1400	151	1607	187	1990
	20	82	1101	99	1322	118	1574	135	1807	167	2227
	24	75	1210	91	1453	108	1731	124	1988	152	2442
	28	70	1311	84	1574	100	1876	115	2155	141	2638
	32	66	1405	79	1684	94	2011	108	2311	132	2822
	36	62	1493	74	1786	89	2137	103	2457	124	2994
	40	59	1577	70	1884	84	2257	97	2596	118	3156
180	15	93	971	111	1167	120	1389	152	1593	186	1974
	19	83	1100	99	1321	118	1573	135	1806	167	2226
	23	75	1216	90	1460	107	1739	123	1998	152	2452
	27	69	1322	83	1587	99	1891	114	2173	140	2660
	31	65	1421	78	1702	93	2033	107	2337	130	2852
	35	61	1513	73	1809	88	2165	101	2490	123	3032
	39	58	1600	69	1911	83	2291	96	2634	116	3202
190	14	93	962	112	1156	120	1375	153	1577	190	1955
	18	83	1098	99	1319	118	1571	136	1803	167	2223
	22	75	1221	90	1465	107	1746	123	2005	151	2462
	26	69	1332	83	1599	99	1906	113	2190	139	2679
	30	64	1435	77	1719	92	2054	106	2361	129	2880
	34	60	1532	72	1831	87	2198	100	2521	121	3068
	38	57	1623	68	1937	82	2323	94	2671	115	3245
200	13	94	951	114	1143	120	1360	155	1560	192	1935
	17	83	1096	99	1316	118	1568	136	1799	168	2218
	21	75	1225	90	1470	107	1752	123	2012	151	2469
	25	69	1341	82	1610	98	1915	113	2205	138	2697
	29	64	1449	76	1735	91	2074	105	2384	126	2907
	33	60	1550	71	1852	86	2216	98	2550	120	3103
	37	57	1644	67	1962	81	2353	93	2707	113	3287
210	18	78	1162	94	1395	112	1662	129	1909	158	2348
	21	73	1259	87	1512	104	1802	119	2070	146	2537
	24	68	1350	82	1619	97	1931	112	2219	137	2714
	27	64	1435	77	1718	92	2053	106	2360	129	2880
	30	61	1515	73	1812	87	2169	101	2493	122	3036
	33	58	1592	70	1901	83	2278	96	2620	117	3185
	36	56	1665	67	1986	80	2385	93	2741	112	3328
220	17	78	1162	94	1395	112	1662	129	1908	158	2347
	20	72	1263	87	1516	104	1807	119	2076	146	2545
	23	68	1358	81	1629	97	1943	111	2233	136	2729
	26	64	1446	76	1732	91	2070	105	2379	128	2902
	29	61	1530	72	1829	87	2189	100	2517	121	3065
	32	58	1609	69	1921	83	2303	95	2649	115	3219
	35	55	1685	66	2009	79	2412	91	2775	110	3367
230	16	78	1161	94	1394	112	1660	129	1906	159	2345
	19	72	1267	87	1521	103	1812	119	2082	146	2552
	22	67	1365	81	1637	96	1955	111	2245	135	2744
	25	63	1457	76	1744	91	2085	104	2397	127	2923
	28	60	1544	72	1845	86	2209	99	2540	120	3092
	31	57	1626	68	1940	82	2327	94	2677	114	3252
	34	55	1704	65	2031	78	2440	90	2807	109	3404

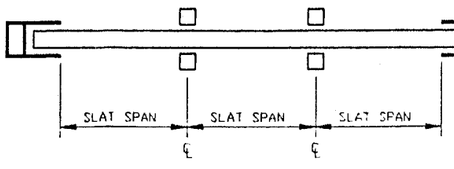

3 OR MORE SPANS LAYOUT

PRODUCT RENEWED
ACCEPTANCE No. 00-0327.05
EXPIRATION DATE 04/26/2003
By
PRODUCT CONTROL DIVISION
BUILDING CODE COMPLIANCE OFFICE

APPROVED AS COMPLYING WITH THE SOUTH FLORIDA BUILDING CODE
DATE APRIL 24 19 97
BY
PRODUCT CONTROL DIVISION
BUILDING CODE COMPLIANCE OFFICE
ACCEPTANCE NO. 96-1003.02

KNEZEVICH & ASSOCIATES, INC.
CONSULTING ENGINEERS & PRODUCT TESTING
641 MOKENA DRIVE MIAMI SPRINGS, FL 33166
PHONE: (305) 883-9571
FAX: (305) 883-9572
2701 W. OAKLAND PK. BLVD. SUITE 240 FT. LAUDERDALE, FL 33311
PHONE: (954) 677-9500

COPYRIGHT 1996 KNEZEVICH & ASSOCIATES, INC.

ROLL-UP SHUTTER

HURST AWNING CO.
5795 N.W. 36TH AVE.
MIAMI, FL. 33142
(305) 635-0900

revisions			
no	date	by	description
1	8-22-96		RENEWAL OF 95-51

V.J. KNEZEVICH
PROFESSIONAL ENGINEER
FL License No: PE 0010983

OCT - 1 1996

date	8-22-96
scale	AS NOTED
drawn by	J.W. HILL
design by	VJK
checked by	VJK
drawing no.	96-380
sheet	9 of 13

INTERIOR STORM BAR SPAN SCHEDULE (J) - MULTIPLE SPAN CONDITION (3 OR MORE SPANS)

POSITIVE DESIGN LOAD (P.S.F.)	SLAT SPAN OR STORM BAR SPACING (IN)	STORM BARS - MAX. LENGTH (INCHES) SEPARATION FROM GLASS = 2"									
		STORM BAR TYPE									
		(4) 1.5" x 3"	(4) END REACTION (POUNDS)	(5) 2" x 3"	(5) END REACTION (POUNDS)	(7) 2" x 4"	(7) END REACTION (POUNDS)	(10) 2" x 5"	(10) END REACTION (POUNDS)	(14) 2" x 9"	(14) END REACTION (POUNDS)
40	39	102	633	98	606	116	724	134	832	193	1199
	45	98	705	94	675	112	805	129	926	186	1335
	51	95	774	89	741	109	884	125	1017	181	1466
	56	93	841	87	805	106	961	122	1105	172	1560
50	35	99	690	95	660	113	788	130	906	188	1306
	41	95	776	91	743	109	887	125	1020	180	1470
	47	92	860	88	823	105	982	121	1130	169	1583
	53	89	941	86	901	102	1075	117	1236	160	1681
	56	87	1020	82	958	99	1165	114	1339	151	1773
60	31	98	722	93	691	112	824	128	948	185	1366
	37	93	824	89	789	107	941	123	1082	174	1538
	43	90	922	86	883	103	1053	118	1211	162	1658
	49	87	1017	82	956	99	1162	114	1336	152	1770
	55	83	1090	77	1013	95	1249	111	1457	143	1875
	56	79	1150	73	1067	90	1316	106	1545	136	1975
70	26	98	711	94	680	112	812	129	934	186	1346
	32	93	830	89	795	106	948	122	1090	174	1546
	38	89	944	85	904	102	1076	117	1240	159	1685
	44	86	1053	80	979	98	1204	113	1384	148	1812
	50	81	1124	75	1043	93	1287	109	1511	139	1932
	56	77	1192	71	1104	87	1362	103	1601	131	2044
80	22	99	693	95	663	113	792	130	910	187	1312
	28	93	830	89	795	106	948	122	1090	174	1546
	34	89	960	85	919	101	1097	117	1261	157	1703
	40	84	1074	78	998	97	1231	112	1424	145	1847
	46	79	1154	73	1070	90	1320	106	1550	135	1981
	52	74	1229	69	1137	85	1403	100	1651	127	2106
	56	71	1301	65	1201	80	1481	95	1746	121	2224
90	19	100	670	96	641	114	765	131	880	189	1268
	25	93	825	89	790	107	942	123	1084	174	1540
	31	88	971	84	927	101	1109	116	1275	156	1716
	37	83	1091	77	1013	95	1250	111	1458	143	1876
	43	77	1180	72	1093	88	1348	104	1585	133	2024
	49	73	1263	67	1167	83	1440	97	1696	124	2161
	55	69	1341	63	1237	78	1526	92	1800	117	2290
100	16	101	642	97	614	116	733	133	843	192	1215
	22	94	816	90	781	107	932	123	1072	176	1528
	28	88	978	84	931	101	1117	116	1285	156	1725
	34	82	1106	76	1027	94	1266	110	1486	141	1901
	40	76	1203	70	1114	87	1374	102	1616	130	2062
	46	71	1293	66	1194	81	1473	95	1736	121	2212
	52	67	1378	62	1270	76	1566	90	1850	114	2352
110	26	88	981	84	934	101	1121	116	1289	155	1729
	30	84	1081	78	1004	96	1239	112	1438	144	1859
	34	79	1154	73	1070	90	1320	106	1550	135	1981
	38	75	1223	69	1132	85	1396	100	1643	128	2096
	42	71	1289	66	1191	81	1469	96	1731	122	2205
	46	68	1352	63	1247	77	1538	91	1815	116	2309
	50	65	1412	60	1301	74	1604	88	1895	111	2408

NOTE: INTERPOLATE FOR STORM BAR SPANS AND REACTIONS BETWEEN THOSE SHOWN ON THIS SHEET.

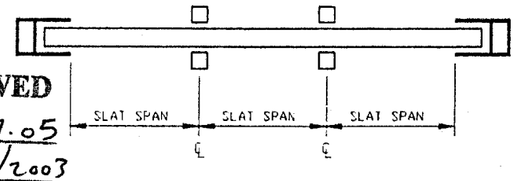

3 OR MORE SPANS LAYOUT

PRODUCT RENEWED
ACCEPTANCE No. 00-0327.05
EXPIRATION DATE 04/25/2003
By Manuel Perez
PRODUCT CONTROL DIVISION
BUILDING CODE COMPLIANCE OFFICE

APPROVED AS COMPLYING WITH THE SOUTH FLORIDA BUILDING CODE
DATE APRIL 24 1997
BY Manuel Perez
PRODUCT CONTROL DIVISION
BUILDING CODE COMPLIANCE OFFICE
ACCEPTANCE NO. 96-1003.02

INTERIOR STORM BAR SPAN SCHEDULE (K) - MULTIPLE SPAN CONDITION (3 OR MORE SPANS)

POSITIVE DESIGN LOAD (P.S.F.)	SLAT SPAN OR STORM BAR SPACING (IN)	STORM BARS - MAX. LENGTH (INCHES) SEPARATION FROM GLASS = 1-1/2"									
		STORM BAR TYPE									
		(4) 1.5" x 3"	(4) END REACTION (POUNDS)	(5) 2" x 3"	(5) END REACTION (POUNDS)	(7) 2" x 4"	(7) END REACTION (POUNDS)	(10) 2" x 5"	(10) END REACTION (POUNDS)	(14) 2" x 9"	(14) END REACTION (POUNDS)
40	39	86	533	82	510	98	608	113	700	162	1008
	45	83	593	79	567	94	677	109	779	157	1122
	51	80	651	77	623	92	744	105	855	152	1232
	56	78	707	75	677	89	808	102	929	148	1339
50	35	83	580	80	555	95	662	109	762	158	1098
	41	80	653	77	625	92	746	105	857	152	1236
	47	77	723	74	692	88	826	102	950	147	1369
	53	75	791	72	757	86	904	99	1039	142	1498
	56	73	857	70	821	84	979	96	1126	138	1623
60	31	82	607	79	581	94	693	108	797	155	1149
	37	79	693	75	663	90	791	103	910	149	1312
	43	76	775	72	742	86	886	99	1019	143	1468
	49	73	855	70	818	84	977	96	1123	139	1619
	55	71	932	68	892	81	1065	93	1225	135	1765
	56	69	1008	66	964	79	1151	91	1324	131	1908
70	26	82	598	79	572	94	683	108	785	156	1131
	32	78	698	75	668	89	797	103	917	148	1322
	38	75	794	72	760	86	907	99	1043	142	1503
	44	72	886	69	848	83	1012	95	1164	137	1677
	50	70	975	67	933	80	1114	92	1281	133	1846
	56	68	1061	65	1016	78	1212	99	1354	129	2009

INTERIOR STORM BAR SPAN SCHEDULE - MULTIPLE SPAN CONDITION (3 OR MORE SPANS)

POSITIVE DESIGN LOAD (P.S.F.)	SLAT SPAN OR STORM BAR SPACING (IN)	(J) CONT. STORM BARS - MAX. LENGTH (INCHES) STORM BAR TYPE SEPARATION FROM GLASS = 2"				(K) CONT. STORM BARS - MAX. LENGTH (INCHES) STORM BAR TYPE SEPARATION FROM GLASS = 1-1/2"			
		(21) 1" x 2"	(21) END REACTION (POUNDS)	(22) 2" x 2"	(22) END REACTION (POUNDS)	(21) 1" x 2"	(21) END REACTION (POUNDS)	(22) 2" x 2"	(22) END REACTION (POUNDS)
40	39	72	448	76	475	59	410	64	399
	45	68	488	74	528	57	455	62	444
	51	64	521	71	580	55	499	60	488
	56	61	552	70	631	54	541	58	530
	63	58	581	66	665	52	583	57	572
	69	56	609	63	696	51	623	56	612
	75	53	636	61	726	50	663	55	651
50	35	69	481	74	517	59	410	62	435
	41	64	522	71	582	57	466	60	489
	47	60	560	69	642	54	520	58	542
	53	57	596	65	682	53	572	56	593
	56	54	630	61	719	51	623	55	643
	65	51	663	58	755	50	673	54	691
	71	49	694	56	789	48	710	52	738
60	31	67	496	73	541	59	403	62	455
	37	62	544	70	618	56	476	59	519
	43	57	588	66	673	54	535	57	581
	49	54	629	61	718	52	597	55	641
	55	51	668	58	761	50	657	53	699
	56	48	705	55	801	48	706	52	755
	67	46	740	53	839	46	745	51	810
70	26	68	491	74	533	60	391	62	448
	32	61	547	70	622	56	470	59	523
	38	57	598	65	683	54	545	56	595
	44	53	645	60	735	51	617	54	664
	50	50	689	56	784	50	686	53	731
	56	47	730	53	829	47	732	51	796
	62	45	770	51	872	44	775	50	859

KNEZEVICH & ASSOCIATES, INC.
CONSULTING ENGINEERS & PRODUCT TESTING
6141 MOKENA DRIVE
MIAMI SPRINGS, FL 33166
PHONE: (305) 883-9571
FAX: (305) 883-9572
2701 W. OAKLAND PK. BLVD.
SUITE 240
FT. LAUDERDALE, FL 33311
PHONE: (954) 677-9500

COPYRIGHT 1996 KNEZEVICH & ASSOCIATES, INC.

ROLL-UP SHUTTER
HURST AWNING CO.
5795 N.W. 36TH AVE.
MIAMI, FL. 33142
(305) 635-0900

revisions

no	date	by	description
1	8-22-96		RENEWAL OF 95-51

V.J. KNEZEVICH
PROFESSIONAL ENGINEER
FL License No.
PE 0070983

OCT - 1 1996

date 8-22-96
scale AS NOTED
drawn by J.W. HILL
design by VJK
checked by VJK
drawing no. 96-380
sheet 10 of 13

PERMANENT MULLION SPAN SCHEDULE (L)

NEGATIVE DESIGN LOAD (P.S.F.)	SLAT SPAN (IN)	MULLION - MAX. LENGTH (INCHES)											
		MULLION TYPE											
		④ 1.5" x 3"	④ END REACTION (POUNDS)	⑤ 2" x 3"	⑤ END REACTION (POUNDS)	⑦ 2" x 4"	⑦ END REACTION (POUNDS)	⑨ 2" x 4" (HEAVY)	⑨ END REACTION (POUNDS)	⑩ 2" x 5"	⑩ END REACTION (POUNDS)	⑭ 2" x 9"	⑭ END REACTION (POUNDS)
40	28	90	458	85	433	108	548	123	624	130	660	180	1099
	34	86	507	81	479	102	606	117	691	123	730	180	1218
	40	82	554	77	523	98	661	112	754	118	797	180	1331
	46	79	599	74	565	94	715	107	815	114	861	180	1440
	52	76	642	72	605	91	766	104	874	110	923	180	1544
	56	74	683	70	645	88	816	101	931	106	983	179	1645
50	25	87	498	82	470	103	594	118	678	125	716	180	1192
	31	82	556	77	525	98	664	111	757	118	800	180	1334
	37	78	612	74	577	93	730	106	833	112	880	180	1469
	43	75	665	71	627	89	794	102	905	108	956	180	1598
	49	72	716	68	675	86	855	98	975	104	1030	173	1705
	55	70	765	66	722	83	914	95	1042	100	1101	165	1793
	56	68	813	64	767	81	971	92	1107	97	1169	158	1877
60	21	84	523	80	493	101	625	115	712	121	752	180	1251
	27	79	591	75	558	95	706	108	805	114	851	180	1417
	33	75	656	71	618	90	783	103	893	108	943	180	1574
	39	72	717	68	676	86	856	98	977	104	1032	173	1706
	45	69	776	65	732	83	927	94	1057	100	1116	163	1811
	51	67	833	63	786	80	994	91	1134	96	1198	155	1911
	56	65	888	61	837	77	1060	88	1209	93	1277	148	2005
70	18	83	542	78	511	99	647	113	738	119	779	180	1295
	24	78	620	73	585	93	740	106	844	112	891	180	1484
	30	73	693	69	654	88	827	100	944	106	997	176	1661
	36	70	762	66	719	84	911	95	1036	101	1097	166	1786
	42	67	825	63	782	80	990	91	1129	96	1193	155	1903
	48	65	892	61	842	77	1066	88	1216	93	1285	147	2013
	54	62	955	59	901	75	1140	85	1300	90	1374	140	2118
80	16	82	557	77	525	98	665	111	756	118	801	180	1329
	22	76	644	72	608	91	770	104	878	109	927	180	1542
	28	72	726	68	685	86	867	96	989	103	1045	172	1720
	34	68	804	64	756	81	960	93	1095	98	1157	159	1858
	40	65	878	61	828	78	1048	89	1196	94	1263	149	1986
	46	63	949	59	895	75	1133	85	1292	90	1365	140	2106
	52	61	1017	57	960	72	1215	82	1385	87	1464	133	2220
90	14	81	565	76	537	97	686	110	775	116	819	180	1357
	20	75	666	71	628	89	796	102	907	108	958	180	1593
	26	70	757	66	714	84	904	96	1031	101	1089	167	1773
	32	67	842	63	794	79	1006	91	1147	96	1212	154	1923
	38	64	925	60	871	76	1103	87	1257	91	1328	143	2062
	44	61	1001	58	944	73	1196	83	1363	88	1440	135	2192
	50	59	1076	56	1015	70	1285	80	1465	85	1548	128	2315
100	12	80	575	76	543	96	667	110	784	116	828	180	1370
	18	74	682	70	644	88	815	101	929	106	982	180	1630
	24	69	781	65	737	82	933	94	1064	99	1124	163	1815
	30	65	875	62	825	78	1045	89	1191	94	1258	150	1978
	36	62	963	59	905	74	1150	85	1312	90	1386	139	2128
	42	60	1048	56	988	71	1251	81	1427	86	1507	130	2268
	48	57	1129	54	1065	69	1348	78	1538	83	1624	123	2400
110	22	69	794	65	748	82	948	93	1081	99	1143	161	1836
	26	66	862	62	814	79	1030	90	1175	95	1241	151	1956
	30	63	926	60	876	76	1108	86	1264	91	1335	143	2068
	34	61	992	58	936	73	1184	84	1351	88	1427	136	2174
	38	59	1053	56	994	71	1258	81	1434	86	1515	130	2276
	42	58	1113	55	1050	69	1329	79	1516	83	1601	125	2373
	46	56	1171	53	1105	67	1399	77	1595	81	1685	120	2467
120	20	66	805	64	759	81	961	93	1096	98	1156	160	1854
	24	65	879	61	829	78	1050	89	1197	94	1265	149	1983
	28	63	950	59	896	75	1134	85	1294	90	1367	141	2103
	32	61	1018	57	961	72	1216	82	1387	87	1465	133	2217
	36	59	1084	55	1023	70	1295	80	1477	84	1560	127	2326
	40	57	1149	54	1084	68	1372	78	1564	82	1653	122	2430
	44	55	1211	52	1143	66	1446	76	1649	80	1743	117	2529
130	18	68	814	64	768	81	973	92	1109	97	1172	158	1869
	22	65	894	61	843	77	1068	88	1218	93	1286	147	2007
	26	62	970	58	915	74	1159	84	1321	89	1396	138	2136
	30	60	1043	56	984	71	1246	81	1421	86	1501	131	2258
	34	58	1114	55	1051	69	1331	79	1517	83	1603	125	2373
	38	56	1183	53	1116	67	1412	76	1611	81	1702	119	2483
	42	55	1249	52	1179	65	1492	74	1702	79	1798	114	2588
140	17	67	823	64	776	80	982	92	1120	97	1184	157	1882
	21	64	908	60	856	77	1084	87	1236	92	1306	146	2025
	25	61	989	58	933	73	1181	84	1347	88	1423	137	2166
	29	59	1067	56	1007	71	1274	80	1453	85	1535	129	2295
	33	57	1142	54	1078	68	1364	78	1556	82	1644	122	2417
	37	55	1215	52	1146	66	1451	75	1655	80	1748	117	2534
	41	54	1286	51	1213	64	1536	73	1751	77	1850	112	2645

PERMANENT MULLION SPAN SCHEDULE (L)

NEGATIVE DESIGN LOAD (P.S.F.)	SLAT SPAN (IN)	MULLION - MAX. LENGTH (INCHES)											
		MULLION TYPE											
		④ 1.5" x 3"	④ END REACTION (POUNDS)	⑤ 2" x 3"	⑤ END REACTION (POUNDS)	⑦ 2" x 4"	⑦ END REACTION (POUNDS)	⑨ 2" x 4" (HEAVY)	⑨ END REACTION (POUNDS)	⑩ 2" x 5"	⑩ END REACTION (POUNDS)	⑭ 2" x 9"	⑭ END REACTION (POUNDS)
150	15	67	830	63	783	80	991	91	1130	96	1194	156	1893
	19	64	920	60	868	76	1099	87	1253	92	1324	144	2049
	23	61	1007	57	950	73	1202	83	1371	88	1448	135	2195
	27	58	1089	55	1028	70	1301	80	1484	84	1567	127	2331
	31	56	1169	53	1103	67	1396	77	1592	81	1682	120	2459
	35	55	1246	52	1176	65	1489	74	1698	79	1793	115	2582
	39	53	1321	50	1246	63	1578	72	1799	76	1901	110	2698
160	14	67	835	63	788	80	998	91	1138	96	1203	156	1902
	18	63	932	60	879	76	1113	86	1269	91	1340	143	2068
	22	60	1023	57	965	72	1222	82	1393	87	1472	133	2221
	26	58	1111	55	1048	69	1327	79	1513	83	1598	125	2364
	30	56	1195	53	1127	67	1427	76	1627	80	1719	118	2499
	34	54	1276	51	1204	65	1524	74	1738	78	1836	113	2628
	38	52	1355	49	1279	63	1618	71	1846	75	1950	108	2750
170	13	67	840	63	793	80	1004	91	1145	96	1209	155	1909
	17	63	942	59	889	75	1125	86	1283	90	1356	142	2084
	21	60	1039	57	980	72	1241	82	1415	86	1495	132	2246
	25	57	1131	54	1067	69	1351	78	1540	83	1627	123	2396
	29	55	1220	52	1151	66	1457	75	1661	80	1755	117	2538
	33	53	1305	50	1231	64	1559	72	1778	77	1878	111	2672
	37	52	1388	49	1310	62	1658	71	1890	75	1997	106	2799
180	12	66	845	63	797	79	1009	90	1150	96	1215	154	1915
	16	63	952	59	898	75	1137	85	1296	90	1370	141	2099
	20	59	1054	56	994	71	1258	81	1435	86	1516	130	2269
	24	57	1150	54	1085	68	1374	78	1567	82	1655	122	2426
	28	55	1244	52	1173	65	1485	75	1694	79	1789	115	2574
	32	53	1333	50	1258	63	1592	72	1816	76	1916	109	2714
	36	51	1420	48	1340	61	1696	70	1934	74	2043	104	2847
190	11	66	848	63	800	79	1013	90	1155	95	1220	154	1920
	15	62	961	59	906	74	1147	85	1309	90	1382	140	2113
	19	59	1068	56	1007	71	1275	80	1454	85	1536	129	2290
	23	56	1169	53	1103	67	1396	77	1592	81	1682	120	2455
	27	54	1266	51	1195	65	1512	74	1725	78	1822	113	2609
	31	52	1360	49	1283	63	1624	71	1852	75	1957	107	2755
	35	51	1451	48	1369	61	1733	69	1976	73	2087	102	2893
200	10	66	851	62	802	79	1016	90	1158	95	1224	154	1923
	14	62	969	59	914	74	1157	84	1320	89	1394	139	2126
	18	59	1081	55	1020	70	1291	80	1473	84	1555	128	2311
	22	56	1187	53	1120	67	1418	76	1617	81	1708	119	2482
	26	54	1289	51	1216	64	1539	73	1755	77	1854	112	2643
	30	52	1386	49	1308	62	1656	71	1888	75	1995	106	2794
	34	50	1481	47	1397	60	1768	68	2017	72	2131	101	2937
210	15	60	1036	57	977	72	1237	82	1411	86	1490	132	2236
	18	58	1122	54	1058	69	1339	79	1527	83	1614	124	2376
	21	56	1204	52	1136	66	1438	76	1640	80	1732	118	2509
	24	54	1284	51	1211	64	1533	73	1749	78	1847	112	2635
	27	52	1361	49	1284	62	1626	71	1854	75	1955	107	2755
	30	51	1437	48	1355	61	1716	69	1957	73	2067	103	2870
	33	50	1510	47	1425	59	1802	68	2057	71	2173	99	2980
220	14	60	1045	56	986	71	1248	81	1424	86	1504	131	2251
	17	57	1135	54	1071	68	1355	78	1545	82	1633	123	2397
	20	55	1221	52	1152	66	1458	75	1662	80	1756	117	2534
	23	53	1304	50	1230	64	1557	73	1776	77	1876	111	2664
	26	52	1384	49	1306	62	1653	71	1885	75	1992	106	2789
	29	50	1462	48	1380	60	1746	69	1992	73	2104	102	2908
	32	49	1539	46	1451	59	1837	67	2095	71	2214	98	3022
230	14	59	1054	56	995	71	1259	81	1436	86	1517	131	2264
	17	57	1147	54	1082	68	1370	78	1563	82	1651	122	2416
	20	55	1237	52	1167	66	1477	75	1684	79	1778	116	2558
	23	53	1323	50	1248	63	1580	72	1802	76	1903	110	2693
	26	51	1406	49	1327	61	1680	70	1915	74	2023	105	2822
	29	50	1487	47	1403	60	1776	68	2026	72	2140	100	2945
	32	49	1566	46	1478	58	1871	66	2133	70	2254	97	3063

NOTE: INTERPOLATE FOR MULLION SPANS AND/OR SECTIONS BETWEEN THOSE SHOWN ON THIS SHEET.

PRODUCT RENEWED
ACCEPTANCE No. 00-0327.05
EXPIRATION DATE 04/25/2003
By Manuel Perez
PRODUCT CONTROL DIVISION
BUILDING CODE COMPLIANCE OFFICE

APPROVED AS COMPLYING WITH THE SOUTH FLORIDA BUILDING CODE
DATE APRIL 24 1997
BY Manuel Perez
PRODUCT CONTROL DIVISION
BUILDING CODE COMPLIANCE OFFICE
ACCEPTANCE NO. 96-1003.02

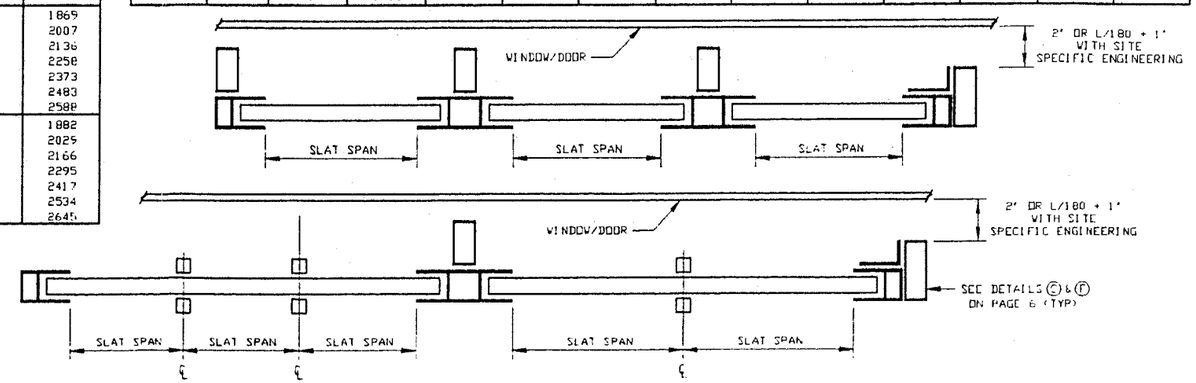

MULLION LAYOUT

KNEZEVICH & ASSOCIATES, INC.
CONSULTING ENGINEERS & PRODUCT TESTING
641 MOKENA DRIVE MIAMI SPRINGS, FL 33166 PHONE: (305) 883-9571 FAX: (305) 883-9572
2701 W. OAKLAND PK. BLVD. SUITE 240 FT. LAUDERDALE, FL 33311 PHONE: (954) 677-9500

COPYRIGHT 1996 KNEZEVICH & ASSOCIATES, INC.

ROLL-UP SHUTTER

HURST AWNING CO.
5795 N.W. 36TH AVE.
MIAMI, FL. 33142
(305) 635-0900

revisions			
no.	date	by	description
1	8-22-96		RENEWAL OF 95-51

V.J. KNEZEVICH
PROFESSIONAL ENGINEER
FL License No: PE 0010983
OCT 1 1996

date	8-22-96
scale AS NOTED	drawn by J.W. HILL
design by VJK	checked by VJK
drawing no.	96-380
sheet 11 of 13	

HEADER LENGTH OR SHUTTER WIDTH SCHEDULE (M)

HEADER - MAX. LENGTH (INCHES)

HEADER TYPE

NEGATIVE DESIGN LOAD (P.S.F.)	MAXIMUM SLAT SPAN USED (IN)	(5) 2' x 3' STORM BAR HEIGHT 48	60	72	84	96	120	(7) 2' x 4' STORM BAR HEIGHT 48	60	72	84	96	120
40	44	152	136	126	117	110	87	185	166	152	141	132	120
	50	152	138	126	117	97	87	185	166	152	143	134	120
	56	154	138	126	104	97	87	185	166	154	143	134	107
	56	154	138	112	104	97	87	185	168	154	143	119	107
50	40	136	122	113	105	98	88	166	149	137	127	119	108
	46	136	124	113	105	98	78	166	149	136	128	120	108
	52	138	124	113	105	87	78	166	151	138	128	120	96
	56	138	124	100	93	87	78	168	151	138	114	107	96
60	33	125	112	102	96	89	80	152	137	125	116	109	99
	39	125	113	103	96	89	80	152	137	125	117	110	99
	45	126	113	103	96	79	71	152	137	126	117	110	87
	51	126	113	103	85	79	71	154	138	126	117	98	87
	56	126	100	91	85	79	71	154	138	112	104	98	87
70	28	116	104	95	88	83	74	141	127	116	108	101	90
	34	116	104	96	89	83	74	141	127	116	108	102	91
	40	117	105	96	89	83	66	141	127	117	109	102	91
	46	117	105	96	78	73	66	141	128	117	109	90	81
	52	117	105	85	78	73	66	143	128	104	97	90	81
	56	117	93	85	78	73	66	143	114	104	97	90	81
80	24	108	97	88	82	77	69	132	119	109	101	94	85
	30	108	97	89	83	77	69	132	119	109	101	94	85
	36	108	98	89	83	77	61	132	119	109	102	96	85
	42	110	98	89	73	69	61	132	120	110	102	96	76
	48	110	98	79	73	69	61	134	120	110	90	85	76
	54	110	97	79	73	69	61	134	107	96	90	85	76
	56	97	97	79	73	69	61	119	107	96	90	85	76
90	21	102	91	83	77	72	65	125	112	103	95	89	80
	27	102	91	83	78	73	65	125	112	103	95	89	80
	33	102	92	84	78	73	58	125	112	103	96	90	81
	39	103	92	84	78	65	58	125	113	104	96	90	71
	45	103	92	75	69	65	58	126	113	104	85	80	71
	51	103	82	75	69	65	58	126	101	92	85	80	71
	56	91	82	75	69	65	58	112	101	92	85	80	71
100	18	97	87	79	73	69	61	119	107	98	90	85	76
	24	97	87	79	73	69	62	119	107	98	90	85	76
	30	97	88	80	74	69	62	119	107	98	90	85	76
	36	98	86	80	74	61	55	119	107	99	91	85	68
	42	98	88	71	66	61	55	120	108	99	81	76	68
	48	98	78	71	66	61	55	120	108	87	81	76	68
	54	87	76	71	66	61	55	107	96	87	81	76	68
110	27	92	83	76	71	66	59	113	102	93	86	81	73
	31	93	84	76	71	66	52	113	102	93	87	81	73
	35	93	84	76	71	58	52	113	103	94	87	81	64
	39	93	84	67	62	58	52	115	103	94	77	72	64
	43	93	74	67	62	58	52	115	103	83	77	72	64
	47	83	74	67	62	58	52	115	91	83	77	72	64
	51	83	74	67	62	58	52	102	91	83	77	72	64
120	25	86	79	73	68	63	57	109	98	89	82	77	70
	29	86	80	73	68	63	50	109	98	89	83	78	70
	33	89	80	73	68	56	50	109	99	90	83	78	62
	37	89	80	65	60	56	50	110	99	90	74	69	62
	41	89	71	65	60	56	50	110	99	80	74	69	62
	45	79	71	65	60	56	50	110	87	80	74	69	62
	49	79	71	65	60	56	50	98	87	80	74	69	62
130	23	85	76	69	65	61	54	105	94	86	79	74	67
	27	85	77	70	65	61	54	105	94	86	80	75	67
	31	86	77	70	65	54	48	105	94	87	80	75	59
	35	86	77	62	57	54	48	105	95	87	80	66	59
	39	86	68	62	57	54	48	106	95	77	71	66	59
	43	76	68	62	57	54	48	106	84	77	71	66	59
	47	76	68	62	57	54	48	94	84	77	71	66	59
140	21	82	73	67	63	59	52	101	90	82	76	71	64
	25	82	74	68	63	59	52	101	90	82	76	72	65
	29	83	74	68	63	52	46	101	90	83	77	72	57
	33	83	74	68	55	52	46	101	91	83	77	64	57
	37	83	66	60	55	52	46	102	91	74	68	64	57
	41	73	66	60	55	52	46	102	81	74	68	64	57
	45	73	66	60	55	52	46	90	81	74	68	64	57

NEGATIVE DESIGN LOAD (P.S.F.)	MAXIMUM SLAT SPAN USED (IN)	(10) 2' x 5' STORM BAR HEIGHT 48	60	72	84	96	120	(12) 2' x 6' STORM BAR HEIGHT 48	60	72	84	96	120
40	44	216	194	178	165	155	139	245	221	202	188	176	159
	50	216	194	178	165	155	141	245	221	202	188	176	159
	56	216	194	178	167	157	141	245	221	202	188	176	160
	56	216	194	180	167	157	141	245	221	202	188	178	160
50	40	194	174	160	148	139	125	221	198	182	169	159	142
	46	194	174	160	148	139	126	221	198	182	169	159	142
	52	194	174	160	150	141	126	221	198	182	169	159	144
	56	194	174	161	150	141	112	221	198	182	171	160	144
60	33	178	160	146	136	127	114	202	182	167	155	145	130
	39	178	160	146	136	127	116	202	182	167	155	145	130
	45	178	160	146	136	129	116	202	182	167	155	145	132
	51	178	160	148	137	129	116	202	182	167	155	147	132
	56	178	161	148	137	129	103	202	182	169	157	147	132
70	28	165	148	136	126	118	106	188	169	155	144	135	121
	34	165	148	136	126	118	106	188	169	155	144	135	121
	40	165	148	136	126	120	107	188	169	155	144	135	121
	46	165	148	137	127	120	107	188	169	155	144	136	122
	52	165	150	137	127	120	95	188	169	157	145	136	122
	56	167	150	137	113	106	95	188	171	157	145	136	109
80	24	155	139	127	118	111	99	176	159	145	135	126	114
	30	155	139	127	118	111	99	176	159	145	135	126	114
	36	155	139	127	118	111	101	176	159	145	135	126	114
	42	155	139	127	120	112	101	176	159	145	135	126	115
	48	155	141	129	120	112	89	176	159	145	136	128	115
	54	157	141	129	106	99	89	176	160	147	136	128	102
	56	157	141	114	106	99	89	178	160	147	136	114	102
90	21	146	131	120	112	105	94	167	150	137	127	120	107
	27	146	131	120	112	105	94	167	150	137	127	120	107
	33	146	131	120	112	105	95	167	150	137	127	120	107
	39	146	131	120	113	106	95	167	150	137	127	120	108
	45	146	133	122	113	106	84	167	150	137	129	121	108
	51	148	133	122	100	94	84	167	152	139	129	121	96
	56	148	133	108	100	94	84	169	151	139	129	107	96
100	18	139	125	114	106	99	89	159	142	130	121	114	102
	24	139	125	114	106	99	89	159	142	130	121	114	102
	30	139	125	114	106	99	89	159	142	130	121	114	102
	36	139	125	114	106	101	90	159	142	130	121	114	103
	42	139	125	116	107	101	80	159	142	130	122	115	103
	48	141	126	116	107	89	80	159	144	132	122	115	92
	54	141	126	103	95	89	80	160	144	132	122	102	92
110	27	133	119	109	101	95	85	151	136	125	116	108	97
	31	133	119	109	101	95	86	151	136	125	116	108	97
	35	133	119	109	102	96	86	151	136	125	116	108	98
	39	133	119	110	102	96	76	151	136	125	117	110	98
	43	133	121	110	102	85	76	151	136	126	117	110	98
	47	134	121	110	91	85	76	151	138	126	117	110	87
	51	134	121	98	91	85	76	153	138	126	117	97	87
120	25	127	114	105	97	91	82	145	130	120	111	104	93
	29	127	114	105	97	91	83	145	130	120	111	104	93
	33	127	114	105	98	92	83	145	130	120	111	104	94
	37	127	114	106	98	92	73	145	130	120	112	105	94
	41	127	116	106	98	82	73	145	130	121	112	105	94
	45	129	116	106	87	82	73	145	132	121	112	105	84
	49	129	116	94	87	82	73	147	132	121	112	93	84
130	23	123	110	101	93	88	78	140	126	115	107	100	90
	27	123	110	101	93	88	79	140	126	115	107	100	90
	31	123	110	101	93	89	79	140	126	115	107	100	91
	35	123	110	102	94	89	70	140	126	115	107	101	91
	39	123	111	102	94	89	70	140	126	116	108	101	91
	43	124	111	102	84	78	70	140	127	116	108	101	81
	47	124	111	90	84	78	70	141	127	116	108	90	81
140	21	118	106	97	90	84	76	135	121	111	103	97	87
	25	118	106	97	90	84	76	135	121	111	103	97	87
	29	118	106	97	90	85	76	135	121	111	103	97	88
	33	118	106	98	91	85	76	135	121	111	103	98	88
	37	118	107	98	91	85	69	135	121	112	104	98	86
	41	120	107	98	81	76	68	135	122	112	104	98	78
	45	120	107	87	81	76	68	136	122	112	104	87	78

NEGATIVE DESIGN LOAD (P.S.F.)	MAXIMUM SLAT SPAN USED (IN)	(13) 2' x 7' STORM BAR HEIGHT 48	60	72	84	96	120	(14) 2' x 9' STORM BAR HEIGHT 48	60	72	84	96	120	180	240
40	44	274	246	226	210	197	177	284	254	232	214	201	179	147	128
	50	274	246	226	210	197	177	284	254	232	214	201	179	148	128
	56	274	246	226	210	197	177	284	254	232	214	201	179	148	128
	56	274	246	226	210	197	179	284	254	232	214	201	181	148	113
50	40	246	222	203	189	177	159	254	227	207	192	179	160	131	115
	46	246	222	203	189	177	159	254	227	207	192	179	160	133	115
	52	246	222	203	189	177	159	254	227	207	192	179	160	133	115
	56	246	222	203	189	177	161	254	227	207	192	179	162	133	102
60	33	226	203	186	173	163	146	232	207	189	175	164	147	120	104
	39	226	203	186	173	163	146	232	207	189	175	164	147	120	105
	45	226	203	186	173	163	146	232	207	189	175	164	147	121	105
	51	226	203	186	173	163	148	232	207	189	175	164	148	121	93
	56	226	203	186	173	164	148	232	207	189	175	166	148	107	93
70	28	210	189	173	161	151	136	214	192	175	162	152	136	111	96
	34	210	189	173	161	151	136	214	192	175	162	152	136	111	97
	40	210	189	173	161	151	136	214	192	175	162	152	136	112	97
	46	210	189	173	161	151	137	214	192	175	162	152	137	112	86
	52	210	189	173	161	153	137	214	192	175	162	153	137	99	86
	56	210	189	175	163	153	137	214	192	175	164	153	137	99	86
80	24	197	177	163	151	142	127	201	179	164	152	142	127	104	90
	30	197	177	163	151	142	127	201	179	164	152	142	127	104	91
	36	197	177	163	151	142	127	201	179	164	152	142	127	105	91
	42	197	177	163	151	142	127	201	179	164	152	142	127	105	91
	48	197	177	163	151	143	129	201	179	164	152	143	128	105	80
	54	197	177	163	153	143	129	201	179	164	153	143	128	93	80
	56	197	179	164	153	143	114	201	179	166	153	143	[illegible]	93	80
90	21	186	168	154	143	134	120	189	169	154	143	134	120	98	85
	27	186	168	154	143	134	120	189	169	154	143	134	120	98	85
	33	186	168	154	143	134	120	189	169	154	143	134	120	99	86
	39	186	168	154	143	134	120	189	169	154	143	134	120	99	86
	45	186	168	154	143	135	122	189	169	154	143	135	121	99	76
	51	186	168	154	144	135	122	189	169	154	145	135	121	97	76
	56	186	170	155	144	135	108	189	169	156	145	135	[illegible]	87	76
100	18	177	159	146	136	127	114	179	150	147	136	127	113	93	80
	24	177	159	146	136	127	114	179	150	147	136	127	113	93	80
	30	177	159	146	136	127	114	179	150	147	136	127	113	93	81
	36	177	159	146	136	127	114	179	150	147	136	127	113	94	81
	42	177	159	146	136	127	116	179	150	147	136	127	115	94	72
	48	177	159	146	137	129	116	179	150	147	137	128	115	83	72
	54	177	161	148	137	129	103	179	150	148	137	128	102	83	72
110	27	169	152	140	130	122	109	171	153	140	129	121	108	89	77
	31	169	152	140	130	122	109	171	153	140	129	121	108	89	77
	35	169	152	140	130	122	109	171	153	140	129	121	108	89	77
	39	169	152	140	130	122	110	171	153	140	129	121	109	89	68
	43	169	152	140	131	123	110	171	153	140	129	122	109	79	68
	47	169	152	141	131	123	110	171	153	141	131	122	109	79	68
	51	169	154	141	131	123	98	171	155	141	131	122	97	79	68
120	25	163	146	134	124	117	105	164	147	134	124	116	104	85	74
	29	163	146	134	124	117	105	164	147	134	124	116	104	86	74
	33	163	146	134	124	117	105	164	147	134	124	116	104	86	74
	37	163	146	134	124	117	106	164	147	134	124	116	105	86	66
	41	163	146	134	124	118	106	164	147	134	124	117	105	76	66
	45	163	146	135	126	118	106	164	147	134	125	117	105	76	66
	49	163	148	135	126	118	94	164	148	135	125	117	93	76	66
130	23	156	141	129	120	112	101	157	141	128	119	111	100	81	70
	27	156	141	129	120	112	101	157	141	128	119	111	100	82	71
	31	156	141	129	120	112	101	157	141	128	119	111	100	82	71
	35	156	141	129	120	112	102	157	141	128	119	111	101	82	63
	39	156	141	129	120	113	102	157	141	128	119	113	101	73	63
	43	156	141	130	121	113	102	157	141	128	120	113	101	73	63
	47	156	142	130	121	113	90	157	142	130	120	113	89	73	63
140	21	151	136	124	115	108	97	152	136	124	115	107	96	78	68
	25	151	136	124	115	108	97	152	136	124	115	107	96	78	69
	29	151	136	124	115	108	97	152	136	124	115	107	96	79	69
	33	151	136	124	115	108	98	152	136	124	115	107	97	79	61
	37	151	136	124	115	109	98	152	136	124	115	108	97	70	61
	41	151	136	126	117	109	98	152	136	124	116	108	97	70	61
	45	151	137	126	117	109	87	152	137	125	116	108	86	70	61

NOTE: INTERPOLATE FOR HEADER SPANS AND REACTIONS BETWEEN THOSE SHOWN ON THIS SHEET.
FOR HEADER REACTION DETERMINATION AND END CONNECTION DETAILS/ANCHORS, SEE SCHEDULE E, SHEET 6 OF 13

PRODUCT RENEWED

ACCEPTANCE No. 00-0327.05

EXPIRATION DATE 04/25/2003

By [signature]
PRODUCT CONTROL DIVISION
BUILDING CODE COMPLIANCE OFFICE

APPROVED AS COMPLYING WITH THE SOUTH FLORIDA BUILDING CODE
DATE APRIL 24 1997
BY [signature]
PRODUCT CONTROL DIVISION
BUILDING CODE COMPLIANCE OFFICE
ACCEPTANCE NO. 96-1003.02

KNEZEVICH & ASSOCIATES, INC.
CONSULTING ENGINEERS & PRODUCT TESTING
641 MOKENA DRIVE, MIAMI SPRINGS, FL 33166
PHONE: (305) 883-9571
FAX: (305) 883-9572
2701 W. OAKLAND PK. BLVD. SUITE 240
FT. LAUDERDALE, FL 33311
PHONE: (954) 677-9500

COPYRIGHT 1996 KNEZEVICH & ASSOCIATES, INC.

ROLL-UP SHUTTER

HURST AWNING CO.
5795 N.W. 36TH AVE
MIAMI, FL. 33142
(305) 635-0900

revisions: no	date	by	description
1	6-22-96		RENEWAL OF 95-51

V.J. KNEZEVICH
PROFESSIONAL ENGINEER
FL License No: PE 0010983

OCT - 1 1996

date: 6-22-96
scale: AS NOTED
drawn by: J.W. HILL
design by: VJK
checked by: VJK
drawing no.: 96-380

HEADER LENGTH OR SHUTTER WIDTH SCHEDULE (M)

HEADER - MAX. LENGTH (INCHES)

NEGATIVE DESIGN LOAD (P.S.F.)	MAXIMUM SLAT SPAN USED (IN)	HEADER TYPE																																	
		⑤ 2" x 3"						⑦ 2" x 4"						⑩ 2" x 5"						⑫ 2" x 6"						⑬ 2" x 7"						⑭ 2" x 9"					
		STORM BAR HEIGHT						STORM BAR HEIGHT						STORM BAR HEIGHT						STORM BAR HEIGHT						STORM BAR HEIGHT						STORM BAR HEIGHT					
		48	60	72	84	96	120	48	60	72	84	96	120	48	60	72	84	96	120	48	60	72	84	96	120	48	60	72	84	96	120	48	60	72	84	96	120	180	240
150	20	79	71	65	60	57	51	93	87	80	74	69	62	114	103	94	87	82	73	130	117	107	100	93	84	146	131	120	112	105	94	147	131	120	111	104	93	76	66
	24	79	72	65	60	57	51	92	87	80	74	70	62	114	103	94	87	82	73	130	117	107	100	93	84	146	131	120	112	105	94	147	131	120	111	104	93	76	66
	28	80	72	65	60	57	45	93	87	81	75	70	55	114	103	94	87	83	74	130	117	107	100	93	84	146	131	120	112	105	94	147	131	120	111	104	93	77	66
	32	80	72	65	53	50	45	93	88	81	75	62	55	114	103	95	88	83	74	130	117	107	100	94	85	146	131	120	112	105	95	147	131	120	111	104	94	77	59
	36	80	63	58	53	50	45	93	88	71	66	62	55	114	104	95	88	83	65	130	117	109	101	94	85	146	131	120	112	106	95	147	131	120	111	105	94	68	59
	40	80	63	58	53	50	45	93	78	71	66	62	55	116	104	95	78	73	65	130	118	108	101	94	75	146	131	120	113	106	95	147	131	120	112	105	94	68	59
	44	71	63	58	53	50	45	87	78	71	66	62	55	116	104	84	78	73	65	132	118	108	101	84	75	146	133	122	113	106	84	147	131	121	112	105	83	68	59
160	18	77	69	63	58	55	49	94	85	77	71	67	60	111	99	91	84	79	71	126	114	104	97	90	81	142	127	117	108	101	91	142	127	116	107	100	90	73	63
	22	77	69	63	59	55	49	94	85	77	71	67	60	111	99	91	84	79	71	126	114	104	97	90	81	142	127	117	108	101	91	142	127	116	107	100	90	73	64
	26	77	69	63	59	55	43	94	85	78	72	68	60	111	99	91	84	79	71	126	114	104	97	90	81	142	127	117	108	101	91	142	127	116	107	100	90	74	64
	30	77	69	63	52	48	43	94	85	78	72	60	53	111	99	91	85	80	71	126	114	104	97	92	82	142	127	117	108	101	92	142	127	116	107	100	91	74	57
	34	77	69	56	52	48	43	96	85	78	64	60	53	111	101	92	85	80	63	126	114	104	96	9.	62	142	127	117	108	103	92	142	127	116	107	101	91	66	57
	38	77	61	56	52	48	43	96	76	69	64	60	53	112	101	92	76	71	63	126	115	105	98	9.	73	142	127	117	109	103	92	142	127	116	108	101	91	66	57
	42	69	61	56	52	48	43	85	76	69	64	60	53	112	101	82	76	71	63	128	115	105	98	8.	73	142	129	118	109	103	82	142	127	117	108	101	80	66	57
170	17	74	66	61	56	53	48	92	82	75	69	65	58	108	97	88	82	77	69	123	110	101	94	88	79	138	124	113	105	99	88	138	123	112	104	97	87	7.	68
	21	74	66	61	57	53	48	92	82	75	69	65	59	108	97	88	82	77	69	123	110	101	94	88	79	138	124	113	105	99	88	138	123	112	104	97	87	7.	68
	25	75	67	61	57	53	42	92	82	75	70	66	59	108	97	88	82	77	69	123	110	101	94	88	79	138	124	113	105	99	88	138	123	112	104	97	87	72	62
	29	75	67	61	53	47	42	92	83	76	70	58	52	108	97	88	83	78	69	123	110	101	94	88	80	138	124	113	105	99	88	138	123	112	104	97	87	72	62
	33	75	67	54	53	47	42	93	83	76	62	58	52	108	98	89	83	78	61	123	110	101	95	89	80	138	124	113	105	100	89	138	123	112	104	98	88	72	55
	37	75	59	54	53	47	42	93	73	67	62	58	52	109	98	89	73	69	61	123	112	102	95	89	71	138	124	113	106	100	89	138	123	112	105	98	88	64	55
	41	66	59	54	53	47	42	82	73	67	62	58	52	109	98	79	73	69	61	124	112	102	95	79	71	138	125	114	106	100	79	138	123	114	105	98	78	64	55
180	16	72	65	59	55	51	46	89	80	73	67	63	56	105	94	86	80	75	67	120	107	98	91	85	77	134	120	110	102	96	86	134	120	109	101	95	85	69	60
	20	72	65	60	55	52	46	89	80	73	67	63	57	105	94	86	80	75	67	120	107	98	91	85	77	134	120	110	102	96	86	134	120	109	101	95	85	69	60
	24	72	65	60	55	52	41	89	80	73	68	64	57	105	94	86	80	75	67	120	107	98	91	85	77	134	120	110	102	96	86	134	120	109	101	95	85	70	60
	28	73	65	60	49	46	41	89	81	74	68	64	50	105	94	86	81	75	67	120	107	98	91	85	78	134	120	110	102	96	86	134	120	109	101	95	85	70	60
	32	73	65	53	49	46	41	90	81	74	60	56	50	105	95	87	81	75	60	120	107	98	92	85	78	134	120	110	102	97	87	134	120	109	101	96	86	70	53
	36	73	58	53	49	46	41	90	71	65	60	56	50	106	95	87	71	67	60	120	109	99	92	85	69	134	120	110	103	97	87	134	120	109	102	96	86	62	52
	40	65	58	53	49	46	41	90	71	65	60	56	50	106	95	77	71	67	60	121	108	99	92	77	69	134	122	111	103	97	77	134	120	110	102	96	76	62	53
190	15	70	63	57	53	50	45	87	78	71	66	61	55	102	92	84	78	73	65	116	105	95	89	83	75	130	117	107	100	93	84	130	116	106	98	92	82	67	58
	19	70	63	57	54	50	45	87	78	71	66	61	55	102	92	84	78	73	65	116	105	95	89	83	75	130	117	107	100	93	84	130	116	106	98	92	82	67	58
	23	70	64	58	54	50	40	87	78	71	66	62	55	102	92	84	78	73	66	116	105	95	89	83	75	130	117	107	100	93	84	130	116	106	98	92	82	68	59
	27	71	64	58	48	44	40	87	78	72	66	62	45	102	92	84	78	73	66	116	105	95	89	83	75	130	117	107	100	93	84	130	116	106	98	92	82	68	59
	31	71	64	51	48	44	40	88	78	72	59	55	49	102	93	85	78	73	58	116	105	95	90	84	76	130	117	107	100	93	85	130	116	106	98	93	83	68	58
	35	71	56	51	48	44	40	88	69	63	59	55	49	103	93	85	69	65	58	116	106	97	90	84	67	130	117	107	101	94	85	130	116	106	100	93	83	60	58
	39	63	56	51	48	44	40	78	69	63	59	55	49	103	93	75	69	65	58	118	106	97	90	75	67	130	117	108	101	94	75	130	116	107	100	93	74	60	58
200	14	69	61	56	52	48	43	85	76	69	64	60	53	99	89	82	76	71	63	114	102	95	87	8.	73	127	114	105	97	91	82	127	113	104	96	90	80	66	57
	18	69	61	56	52	48	44	85	76	69	64	60	53	99	89	82	76	71	63	114	102	95	87	8.	73	127	114	105	97	9.	82	127	113	104	96	90	80	66	57
	22	69	62	57	52	48	39	85	76	69	65	60	54	99	89	82	76	71	64	114	102	93	87	8.	73	127	114	105	97	9.	82	127	113	104	96	90	80	66	57
	26	69	62	57	52	43	39	85	76	70	65	60	48	99	89	82	76	71	64	114	102	93	87	8.	74	127	114	105	97	9.	82	127	113	104	96	90	80	66	57
	30	69	62	50	48	43	39	85	76	70	57	53	48	99	89	83	76	71	57	114	102	93	86	82	74	127	114	105	97	91	83	127	113	104	96	91	81	66	51
	34	69	55	50	48	43	39	85	68	62	57	53	48	101	90	83	68	63	57	114	103	94	88	82	65	127	114	105	98	92	83	127	113	104	97	91	81	59	51
	38	61	55	50	48	43	39	78	68	62	57	53	48	101	90	73	68	63	57	115	103	94	88	73	65	127	114	106	98	92	73	127	113	105	97	9.	72	58	51
210	19	67	60	55	51	48	43	82	74	67	62	58	53	97	87	80	74	69	62	111	100	91	85	79	71	124	112	102	95	89	80	124	111	101	94	88	78	64	56
	22	67	60	55	51	48	38	82	74	67	63	59	53	97	87	80	74	69	62	111	100	91	85	79	71	124	112	102	95	89	80	124	111	101	94	88	78	65	56
	25	68	60	55	51	48	38	82	75	68	63	59	47	97	87	80	75	70	62	111	100	91	85	79	72	124	112	102	95	89	80	124	111	101	94	88	78	65	56
	28	68	60	49	45	42	38	83	75	68	56	52	47	97	87	81	75	70	55	111	100	91	85	80	72	124	112	102	95	89	81	124	111	101	94	88	79	65	50
	31	68	53	49	45	42	38	83	75	60	56	52	47	97	88	81	75	62	55	111	100	92	86	80	72	124	112	102	95	90	81	124	111	101	94	89	79	57	50
	34	60	53	49	45	42	38	83	66	60	56	52	47	98	88	81	66	62	55	111	101	92	86	80	64	124	112	103	96	90	81	124	111	102	95	89	79	57	50
	37	60	53	49	45	42	38	74	66	60	56	52	47	98	88	71	66	62	55	112	101	92	86	7.	64	124	112	103	96	90	78	124	111	102	95	89	70	57	50
220	18	65	58	54	50	47	42	81	72	66	6.	57	52	95	85	78	72	67	60	108	97	89	83	78	65	122	109	100	93	87	78	121	108	99	91	86	77	62	55
	21	65	59	54	50	47	37	81	72	66	62	58	52	95	85	78	72	67	61	108	97	89	83	78	69	122	109	100	93	87	78	121	108	99	91	86	77	63	55
	24	66	59	54	50	41	37	81	72	67	62	58	46	95	85	78	72	63	61	108	97	89	83	78	70	122	109	100	93	87	78	121	108	99	91	86	77	63	55
	27	66	59	48	44	41	37	81	73	67	54	51	46	95	85	79	73	68	54	108	97	89	83	78	70	122	109	100	93	87	75	121	108	99	91	86	77	63	48
	30	66	52	48	44	41	37	81	73	59	54	51	46	95	86	79	73	60	54	108	97	90	84	78	70	122	109	100	93	88	79	121	108	99	91	87	77	56	48
	33	58	52	48	44	41	37	81	64	59	54	51	46	96	86	79	64	60	54	108	98	90	84	78	63	122	109	100	94	88	79	121	108	99	92	87	77	56	48
	36	58	52	48	44	41	37	72	64	59	54	51	46	96	86	70	64	60	54	110	98	90	84	69	63	122	109	101	94	88	70	121	108	100	92	87	68	56	48
230	17	64	57	52	49	46	41	79	70	64	60	56	50	93	83	76	70	66	59	106	95	87	81	76	66	119	107	98	91	85	76	118	106	97	89	84	75	61	53
	20	64	56	53	49	46	36	79	70	64	60	56	50	93	83	76	70	66	60	106	95	87	81	76	66	119	107	98	91	85	76	118	106	97	89	84	75	62	54
	23	65	58	53	49	40	36	79	70	65	60	56	45	93	83	76	70	67	60	106	95	87	81	7.	69	119	107	98	91	85	76	118	106	97	89	84	75	62	54
	26	65	58	47	43	40	36	79	71	65	60	50	45	93	83	77	71	67	53	106	95	87	81	77	65	119	107	98	91	85	77	118	106	97	89	84	76	62	47
	29	65	51	47	43	40	36	80	71	58	53	50	45	93	84	77	71	67	53	106	95	88	82	77	69	119	107	98	91	86	77	118	106	97	89	85	76	55	47
	32	57	51	47	43	40	36	80	63	58	53	50	45	94	84	77	63	59	53	106	96	88	82	77	61	119	107	98	92	86	77	118	106	97	90	85	76	55	47
	35	57	51	47	43	40	36	70	63	58	53	50	45	94	84	68	63	59	53	107	96	88	82	68	61	119	107	99	92	86	69	118	106	98	90	85	67	55	47

NOTE: INTERPOLATE FOR HEADER SPANS AND REACTIONS BETWEEN THOSE SHOWN ON THIS SHEET.
FOR HEADER REACTION DETERMINATION AND END CONNECTION DETAILS/ANCHORS, SEE SCHEDULE E. SHEET 6 OF 13.

PRODUCT RENEWED

ACCEPTANCE No. 00-0327.05

EXPIRATION DATE 04/25/2003

By _____
PRODUCT CONTROL DIVISION
BUILDING CODE COMPLIANCE OFFICE

APPROVED AS COMPLYING WITH THE SOUTH FLORIDA BUILDING CODE
DATE APRIL 24, 97
BY _____
PRODUCT CONTROL DIVISION
BUILDING CODE COMPLIANCE OFFICE
ACCEPTANCE NO. 96-1003.02

KNEZEVICH & ASSOCIATES, INC.
CONSULTING ENGINEERS & PRODUCT TESTING
641 MOKENA DRIVE MIAMI SPRINGS, FL 33166 PHONE: (305) 883-9571 FAX: (305) 883-9572
2701 W. OAKLAND PK. BLVD. SUITE 240 FT. LAUDERDALE, FL 33311 PHONE: (954) 677-9500
COPYRIGHT 1996 KNEZEVICH & ASSOCIATES, INC.

ROLL-UP SHUTTER

HURST AWNING CO.
5795 N.W. 36TH AVE.
MIAMI, FL. 33142
(305) 635-0900

revisions

no	date	by	description
1	8-22-96		RENEWAL OF 95-51

V.J. KNEZEVICH
PROFESSIONAL ENGINEER
FL License No: PE 0010983

OCT - 1 1996

date	8-22-96
scale AS NOTED	drawn by J.W. HILL
design by VJK	checked by VJK
drawing no.	96-380
sheet 13 of 13	