MIAMI-DADE COUNTY, FLORIDA
METRO-DADE FLAGLER BUILDING

BUILDING CODE COMPLIANCE OFFICE
METRO-DADE FLAGLER BUILDING
140 WEST FLAGLER STREET, SUITE 1603
MIAMI, FLORIDA 33130-1563
(305) 375-2901 FAX (305) 375-2908

CONTRACTOR LICENSING SECTION
(305) 375-2527 FAX (305) 375-2558

CONTRACTOR ENFORCEMENT DIVISION
(305) 375-2966 FAX (305) 375-2908

PRODUCT CONTROL DIVISION
(305) 375-2902 FAX (305) 372-6339

PRODUCT CONTROL NOTICE OF ACCEPTANCE

Safeguard Hurricane Protection Systems, Inc.
1315 Neptune Drive
Boynton Beach ,FL 33426

Your application for Notice of Acceptance (NOA) of:
0.050" Perforated and Solid Aluminum Storm Panel
under Chapter 8 of the Code of Miami-Dade County governing the use of Alternate Materials and Types of Construction, and completely described herein, has been recommended for acceptance by the Miami-Dade County Building Code Compliance Office (BCCO) under the conditions specified herein.

This NOA shall not be valid after the expiration date stated below. BCCO reserves the right to secure this product or material at any time from a jobsite or manufacturer's plant for quality control testing. If this product or material fails to perform in the approved manner, BCCO may revoke, modify, or suspend the use of such product or material immediately. BCCO reserves the right to revoke this approval, if it is determined by BCCO that this product or material fails to meet the requirements of the South Florida Building Code.

The expense of such testing will be incurred by the manufacturer.

ACCEPTANCE NO.: 00-0327.08
EXPIRES: 12/31/2004

Raul Rodriguez
Chief Product Control Division

THIS IS THE COVERSHEET, SEE ADDITIONAL PAGES FOR SPECIFIC AND GENERAL CONDITIONS
BUILDING CODE & PRODUCT REVIEW COMMITTEE

This application for Product Approval has been reviewed by the BCCO and approved by the Building Code and Product Review Committee to be used in Miami-Dade County, Florida under the conditions set forth above.

Francisco J. Quintana, R.A.
Director
Miami-Dade County
Building Code Compliance Office

APPROVED: 09/07/2000

NOTICE OF ACCEPTANCE: SPECIFIC CONDITIONS

1. SCOPE

This revises and renews the Notice of Acceptance No. 98-0728.09, which was issued on December 31, 1998. It approves an aluminum storm panel type shutter, as described in Section 2 of this Notice of Acceptance, designed to comply with the South Florida Building Code, 1994 Edition for Miami-Dade County, for the locations where the pressure requirements, as determined by SFBC Chapter 23, do not exceed the Design Pressure Rating values indicated in the approved drawings.

2. PRODUCT DESCRIPTION

This aluminum storm panel type shutter and its components shall be constructed in strict compliance with the following documents: Drawing No. 00-052, titled " 0.050" Perforated and Solid Aluminum Storm Panels", prepared by Knezevich & Associates, Inc., dated March 14, 2000, last revision #2 dated August 16, 2000, sheets 1 through 6 of 6, bearing the Miami-Dade County Product Control Approval stamp with the Notice of Acceptance number and approval date by the Miami-Dade County Product Control Division. These documents shall hereinafter be referred to as the approved drawings.

3. LIMITATIONS

All permanent set components, included but not limited to embedded anchor bolts, threaded cones, metal shields, headers and sills, must be protected against corrosion, contamination and damage at all times.

4. INSTALLATION

This aluminum storm panel type shutter and its components shall be installed in strict compliance with the approved drawings.

5. LABELING

Each panel shall bear a permanent label with the manufacturer's name or logo, city, state and the following statement: "Miami-Dade County Product Control Approved".

6. BUILDING PERMIT REQUIREMENTS

6.1 Application for building permit shall be accompanied by copies of the following:

6.1.1 This Notice of Acceptance.

6.1.2 Duplicate copies of the approved drawings, as identified in Section 2 of this Notice of Acceptance, clearly marked to show the components selected for the proposed installation.

6.1.3 Any other documents required by the Building Official or the South Florida Building Code (SFBC) in order to properly evaluate the installation of this system.

Helmy A. Makar, P.E. - Product Control Examiner
Product Control Division

Safeguard Hurricane Protection Systems, Inc.

ACCEPTANCE No. : 00-0327.08

APPROVED : SEP - 7 2000

EXPIRES : 12/31/2004

NOTICE OF ACCEPTANCE: STANDARD CONDITIONS

1 Renewal of this Acceptance (approval) shall be considered after a renewal application has been filed and the original submitted documents, including test-supporting data, engineering documents, are no older than eight (8) years.

2. Any and all approved products shall be permanently labeled with the manufacturer's name, city, state, and the following statement: "Miami-Dade County Product Control Approved", or as specifically stated in the specific conditions of this Acceptance.

3. Renewals of Acceptance will not be considered if:
   a. There has been a change in the South Florida Building Code affecting the evaluation of this product and the product is not in compliance with the code changes.
   b. The product is no longer the same product (identical) as the one originally approved.
   c. If the Acceptance holder has not complied with all the requirements of this acceptance, including the correct installation of the product.
   d. The engineer, who originally prepared, signed and sealed the required documentation initially submitted, is no longer practicing the engineering profession.

4. Any revision or change in the materials, use, and/or manufacture of the product or process shall automatically be cause for termination of this Acceptance, unless prior written approval has been requested (through the filing of a revision application with appropriate fee) and granted by this office.

5. Any of the following shall also be grounds for removal of this Acceptance:
   a. Unsatisfactory performance of this product or process.
   b. Misuse of this Acceptance as an endorsement of any product, for sales, advertising or any other purposes.

6. The Notice of Acceptance number preceded by the words Miami-Dade County, Florida, and followed by the expiration date may be displayed in advertising literature. If any portion of the Notice of Acceptance is displayed, then it shall be done in its entirety.

7. A copy of this Acceptance as well as approved drawings and other documents, where it applies, shall be provided to the user by the manufacturer or its distributors and shall be available for inspection at the job site at all time. The engineer needs not reseal the copies.

8. Failure to comply with any section of this Acceptance shall be cause for termination and removal of Acceptance.

9. This Notice of Acceptance consists of pages 1, 2 and this last page 3.

END OF THIS ACCEPTANCE

Helmy A. Makar

Helmy A. Makar, P.E. - Product Control Examiner
Product Control Division

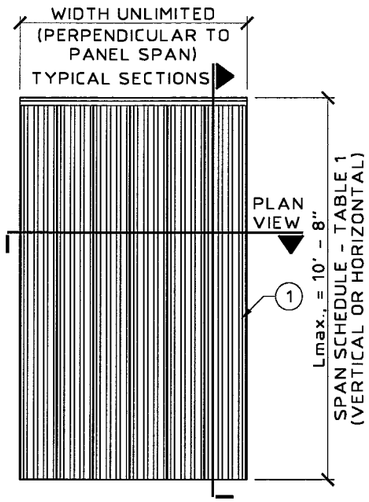

SOLID PANEL ELEVATION

SCALE: 1/4" = 1' - 0"

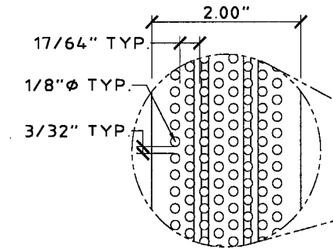

NOTE:

TO REDUCE SEPARATION FROM GLASS, PANELS MAY BE FASTENED @ LAP JOINTS, AT MIDSPAN WITH 1/4-20 x 1/2" THUMB SCREWS WITH WASHER IN MOLLY JACK NUTS. SEE TABLE 2, COLUMN 2 IN SHEET 6 OF 6.

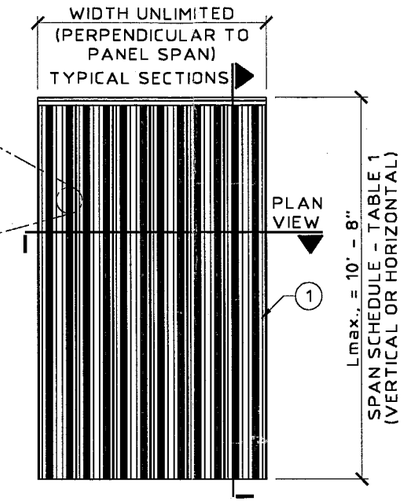

PERFORATED PANEL ELEVATION

SCALE: 1/4" = 1' - 0"

GENERAL NOTES:

1. THIS SHUTTER SYSTEM IS DESIGNED IN ACCORDANCE WITH THE SOUTH FLORIDA BUILDING CODE 1994 EDITION FOR MIAMI-DADE COUNTY.
2. POSITIVE AND NEGATIVE DESIGN PRESSURE CALCULATIONS SHALL BE PERFORMED FOR SPECIFIC JOBS IN ACCORDANCE WITH ASCE 7-88 "MINIMUM DESIGN LOADS FOR BUILDINGS AND OTHER STRUCTURES". TABLES SHALL BE REFERENCED AT THE APPROPRIATE DESIGN LOADS.
3. STORM PANELS SHALL BE 3004-H26 ALUMINUM ALLOY 0.050" THICK. ALL EXTRUSIONS SHALL BE 6063-T6 ALUMINUM ALLOY, U.O.N.
4. PRODUCT MARKINGS SHALL BE WITHIN 12" OF ONE END OF THE PANEL WITH A MIN. OF ONE MARKING PER PANEL, AND SHALL BE LABELED AS FOLLOWS:
   SAFEGUARD HURRICANE PROTECTION SYSTEMS, INC.
   BOYNTON BEACH, FLORIDA
   MIAMI-DADE COUNTY PRODUCT CONTROL APPROVED
5. ALL BOLTS AND WASHERS SHALL BE GALVANIZED OR STAINLESS STEEL WITH A MINIMUM TENSILE STRENGTH OF 60 K.S.I.
6. MATERIAL SPECIFICATIONS NOTED HEREIN ARE THE MATERIALS USED IN PRODUCT TESTING.
7. THE DETAILS AND SPECIFICATIONS SHOWN HEREIN REPRESENT THE PRODUCTS TESTED FOR IMPACT, CYCLIC AND UNIFORM STATIC AIR PRESSURE TESTING IN CONFORMANCE WITH DADE COUNTY PROTOCOLS PA 201, 203, AND 202.
   REFERENCE HURRICANE ENGINEERING TESTING, INC. (H.E.T.I.) TEST REPORTS No. 98-745. REFERENCE, ALSO, AMERICAN TESTING LAB TEST REPORT No. 0504.01-98 AND CONSTRUCTION TESTING CORP. (C.T.C.) TEST REPORT No. 99-026.
8. TOP & BOTTOM DETAILS SHOWN MAY BE INTERCHANGED AS FIELD CONDITIONS DICTATE. PANELS MAY BE MOUNTED HORIZONTALLY WHERE APPLICABLE.
9. ANCHORS SHALL BE INSTALLED IN ACCORDANCE WITH MANUFACTURERS RECOMMENDATIONS. EMBEDMENT LENGTHS SHALL BE AS NOTED AND DO NOT INCLUDE STUCCO OR OTHER FINISHES.
10. PERFORATED PANELS MAY BE USED WITH SOLID PANELS ON SAME OPENING, BUT MINIMUM SEPARATION FROM GLASS SHALL COMPLY WITH PERFORATED PANELS REQUIREMENTS IN TABLE 2.

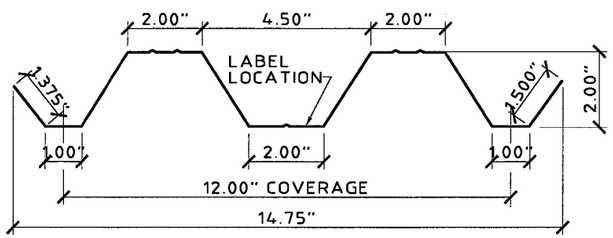

1 STORM PANEL

SCALE: 3" = 1' - 0"

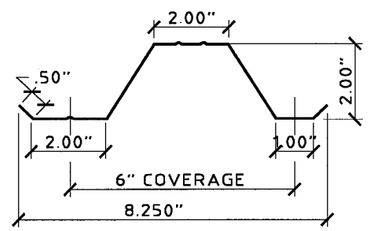

1A HALF PANEL

SCALE: 3" = 1' - 0"

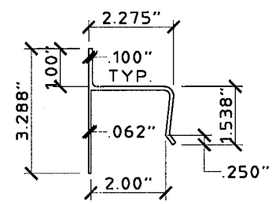

2 "h" HEADER

SCALE: 3" = 1' - 0"

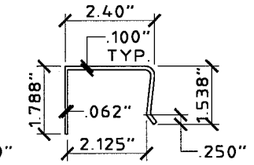

3 "U" HEADER

SCALE: 3" = 1' - 0"

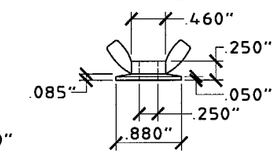

(ZAMAC 3 ALLOY)

4 WASHERED WINGNUT

SCALE : HALF SIZE

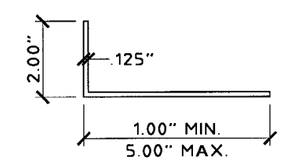

5 ANGLE

SCALE: 3" = 1' - 0"

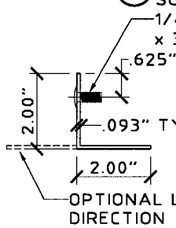

6 STUD ANGLE

SCALE: 3" = 1' - 0"

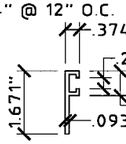

7 "F" TRACK

SCALE: 3" = 1' - 0"

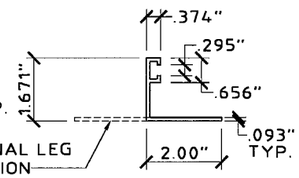

8 "F" ANGLE

SCALE: 3" = 1' - 0"

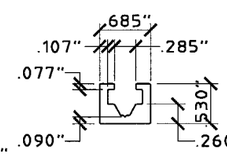

9 RECESS TRACK

SCALE : HALF SIZE

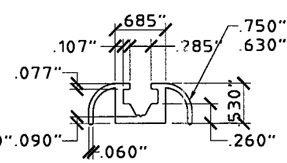

10 DECORATIVE TRACK

SCALE : HALF SIZE

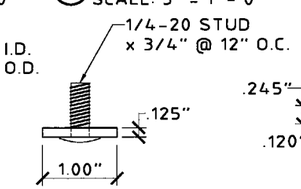

11 SLIDE STRAP

SCALE: HALF SIZE

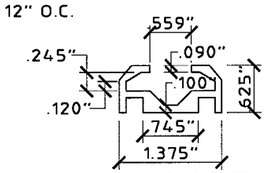

12 INSIDE MOUNT SLIDE TRACK

SCALE : HALF SIZE

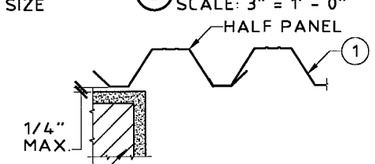

A DIRECT MOUNT (HALF PANEL)

SCALE: 1-1/2" = 1' - 0"

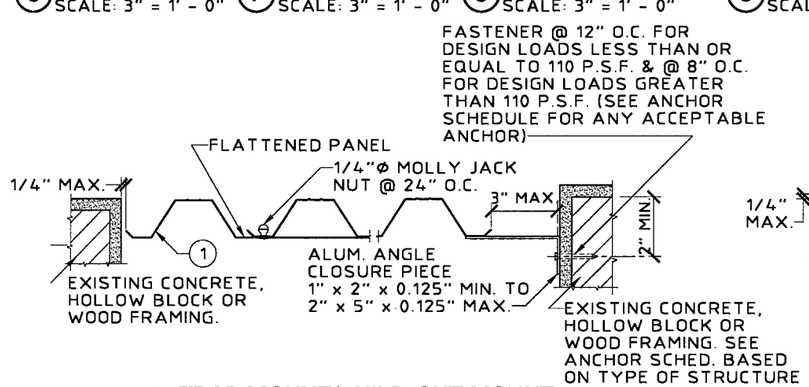

B TRAP MOUNT/BUILD-OUT MOUNT

SCALE: 1-1/2" = 1' - 0"

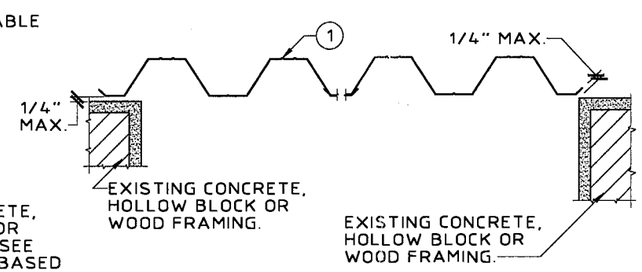

C WALL MOUNT/DIRECT MOUNT

SCALE: 1-1/2" = 1' - 0"

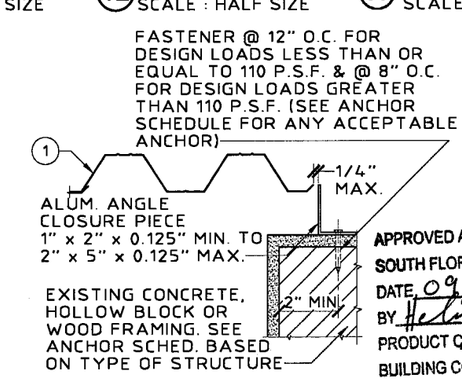

D BUILD-OUT MOUNT

SCALE: 1-1/2" = 1' - 0"

APPROVED AS COMPLYING WITH THE SOUTH FLORIDA BUILDING CODE
DATE 09/07/2000
BY [signature]
PRODUCT CONTROL DIVISION
BUILDING CODE COMPLIANCE OFFICE
ACCEPTANCE NO. 00-0327.08

KNEZEVICH & ASSOCIATES, INC.
CONSULTING ENGINEERS • PRODUCT TESTING
1260 N. UNIVERSITY DRIVE, SUITE 180 • FORT LAUDERDALE, FL 33322
TEL: (954) 382-2800 • FAX: (954) 382-2989 • FLORIDA COA #3205
WEBSITE: WWW.KNEZEVICH.COM • E-MAIL: KA@KNEZEVICH.COM

COPYRIGHT © 2000 KNEZEVICH & ASSOCIATES, INC.

0.050" PERFORATED AND SOLID ALUMINUM STORM PANELS

Safeguard Hurricane Protection Systems, Inc.
1315 Neptune Drive
Boynton Beach, FL 33426
TEL(561) 732-8106 • FAX(561) 732-1435

revisions

no	date	by	description
1	03/14/00	VJK	PREV. DRAWING No. 98-16
2	08/16/00	VJK	GENERAL REVISIONS

V.J. KNEZEVICH
PROFESSIONAL ENGINEER
FL License No: PE 5071983

AUG 17 2000

date 03/14/00	
scale AS NOTED	drawn by MC
design by VJK	checked by VJK

drawing no. 00-052

sheet 1 of 6

08/17/00 10:34

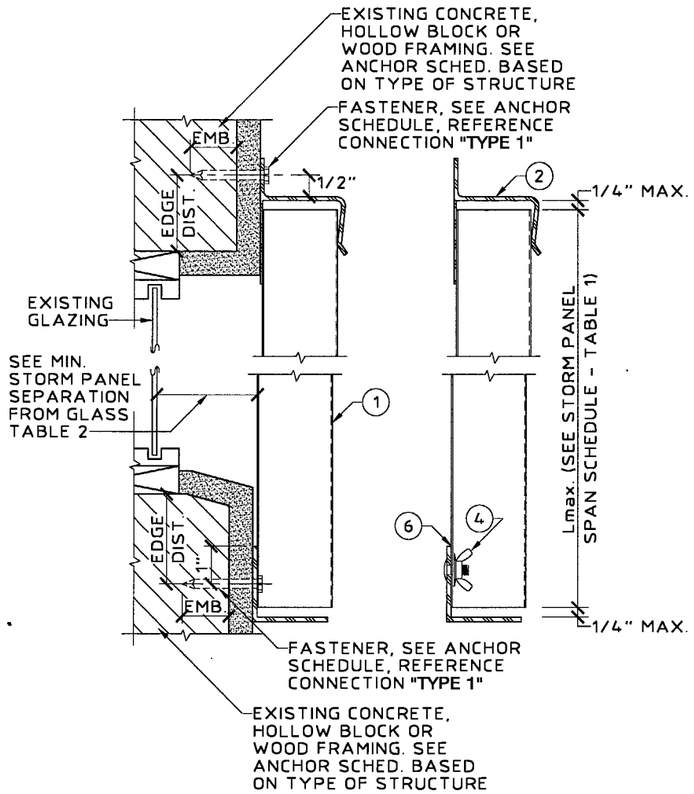

E WALL MOUNT SECTION
SCALE: 3" = 1' - 0"

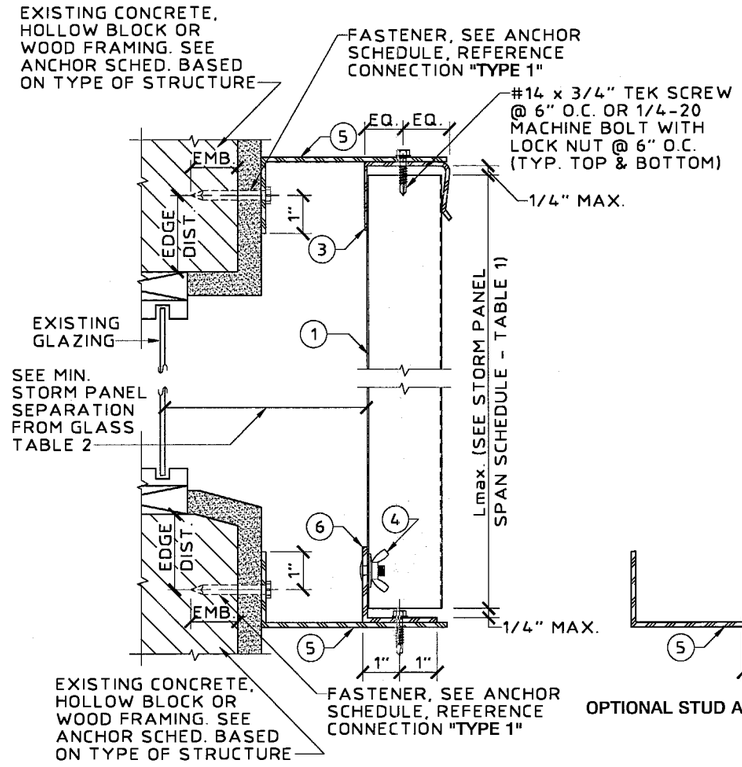

F BUILD-OUT MOUNT SECTION
SCALE: 3" = 1' - 0"

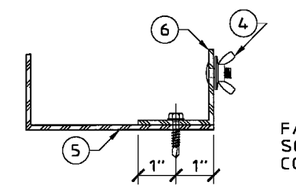

OPTIONAL STUD ANGLE DIRECTION

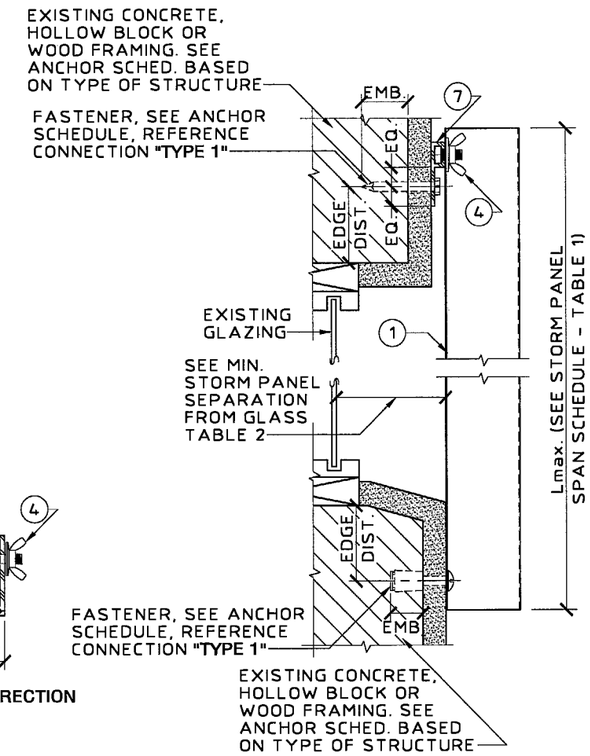

G "F" TRACK/DIRECT MOUNT SECTION
SCALE: 3" = 1' - 0"

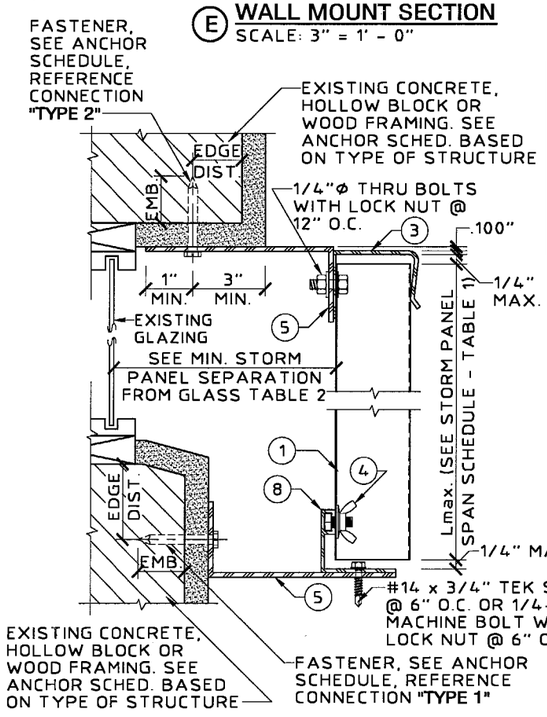

H BUILD-OUT MOUNT SECTION
SCALE: 3" = 1' - 0"

DETAIL J ANCHOR SCHEDULE

1/4"Φ ITW TAPCON W/ 1-3/4" MIN. EMBEDMENT		1/4"Φ POWERS CALK-IN W/ 7/8" EMBEDMENT & 1/4-20 STAINLESS STEEL MACHINE SCREW		1/4"Φ WOOD LAG SCREW W/ MIN. 1-3/4" THREADED PENETRATION "T" SHEAR PARALLEL OR PERPENDICULAR TO WOOD GRAIN
CONC.	BLOCK	CONC.	BLOCK	WOOD
7"	3"	10"	4"	12"

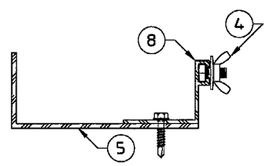

OPTIONAL "F" ANGLE DIRECTION

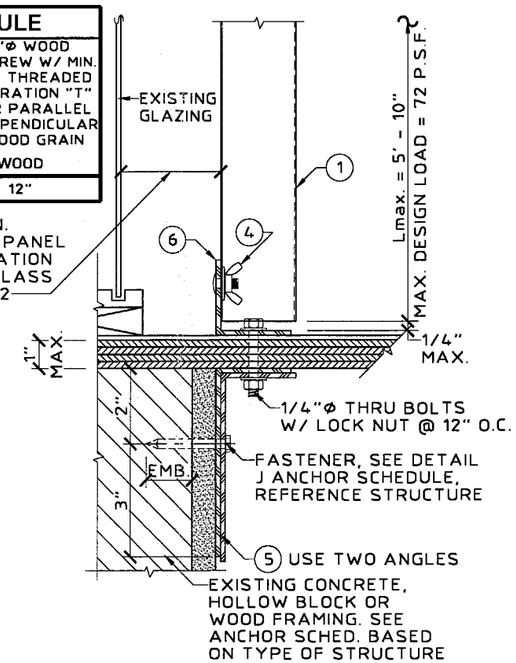

J "PASS THRU" SECTION
SCALE: 3" = 1' - 0"

APPROVED AS COMPLYING WITH THE
SOUTH FLORIDA BUILDING CODE
DATE 09/07/2000
BY [signature]
PRODUCT CONTROL DIVISION
BUILDING CODE COMPLIANCE OFFICE
ACCEPTANCE NO. 00-0327.08

KNEZEVICH & ASSOCIATES, INC.
CONSULTING ENGINEERS • PRODUCT TESTING
1260 N. UNIVERSITY DRIVE, SUITE 180 • FORT LAUDERDALE, FL 33322
TEL: (954) 382-2800 • FAX: (954) 382-2989 • FLORIDA COA #3205
WEBSITE: WWW.KNEZEVICH.COM • E-MAIL: KA@KNEZEVICH.COM
COPYRIGHT © 2000 KNEZEVICH & ASSOCIATES, INC.

0.050" PERFORATED AND SOLID ALUMINUM STORM PANELS

Safeguard Hurricane Protection Systems, Inc.
1315 Neptune Drive
Boynton Beach, FL 33426
TEL(561) 732-3106 • FAX(561) 732-1435

revisions

no	date	by	description
1	03/14/00	VJK	PREV. DRAWING No. 98-16
2	08/16/00	VJK	GENERAL REVISIONS

V.J. KNEZEVICH
PROFESSIONAL ENGINEER
FL License No: PE 0010983
AUG 17 2000

date 03/14/00
scale AS NOTED
drawn by MC
design by VJK
checked by VJK
drawing no. 00-052
sheet 2 of 6

08/16/00 14:54

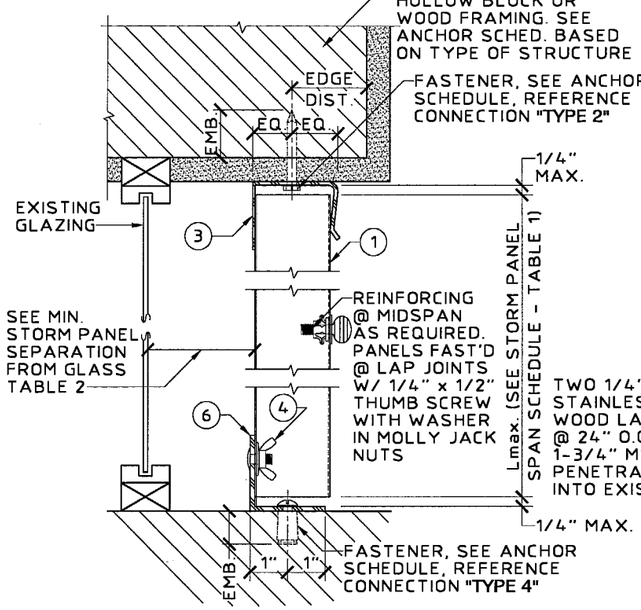

K CEILING/FLOOR MOUNT SECTION
SCALE: 3" = 1' - 0"

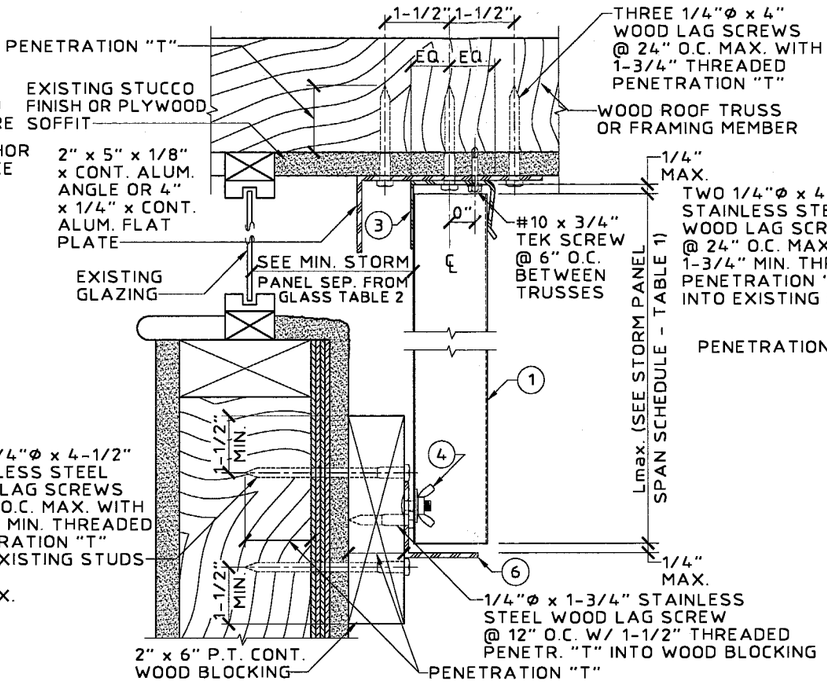

L CEILING/BUILD-OUT MOUNT SECTION
SCALE: 3" = 1' - 0"

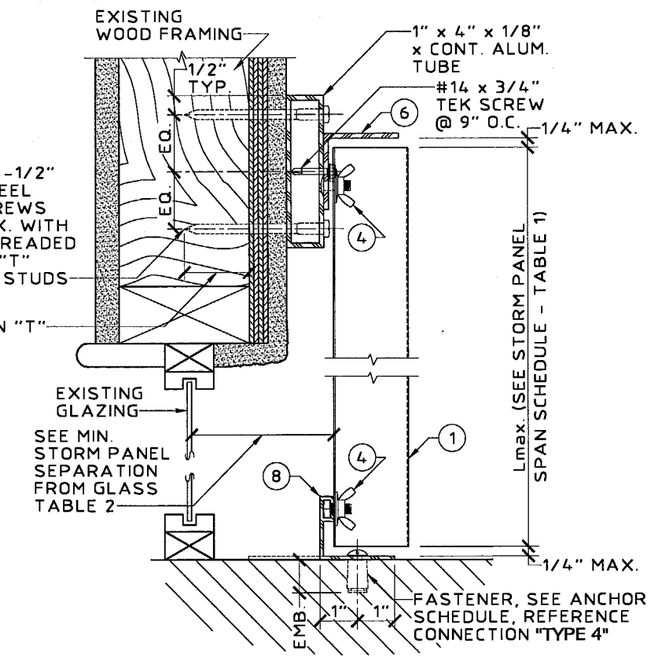

M BUILD-OUT/FLOOR MOUNT SECTION
SCALE: 3" = 1' - 0"

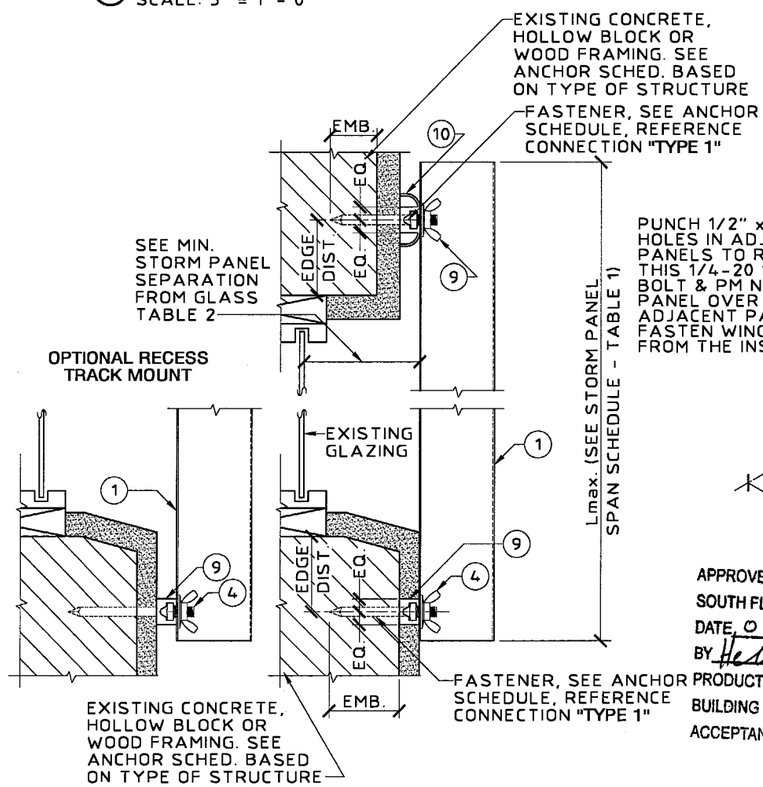

N RECESS TRACK / DECORATIVE TRACK
SCALE: 3" = 1' - 0"

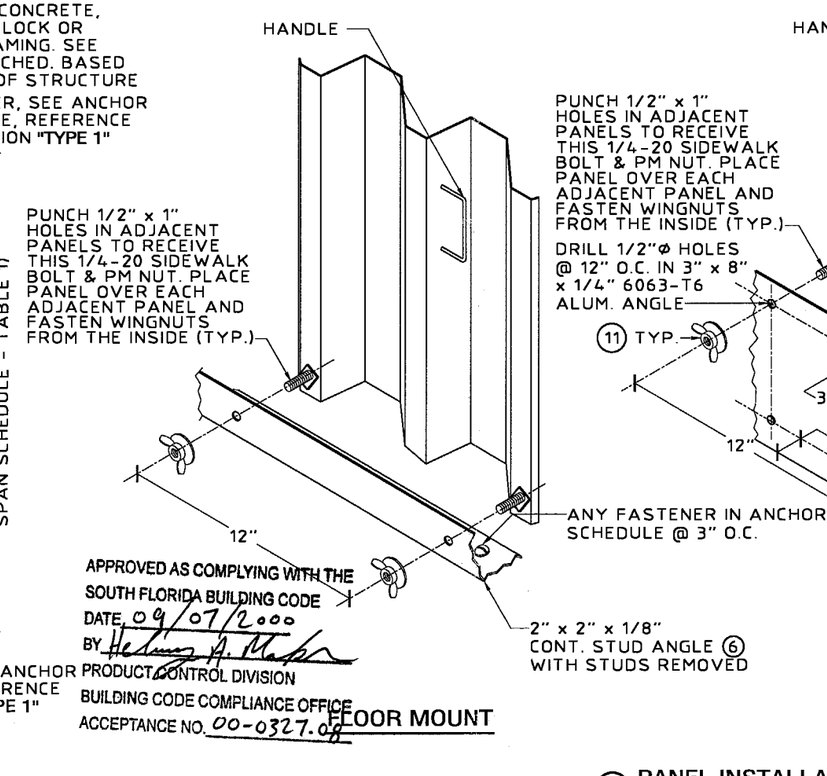

APPROVED AS COMPLYING WITH THE SOUTH FLORIDA BUILDING CODE
DATE 09/07/2000
BY [signature]
PRODUCT CONTROL DIVISION
BUILDING CODE COMPLIANCE OFFICE
ACCEPTANCE NO. 00-0327.08

O PANEL INSTALLATIONS EGRESS WINDOW
SCALE: 3" = 1' - 0"

KNEZEVICH & ASSOCIATES, INC.
CONSULTING ENGINEERS • PRODUCT TESTING
1260 N. UNIVERSITY DRIVE, SUITE 180 • FORT LAUDERDALE, FL 33322
TEL: (954) 382-2800 • FAX: (954) 382-2869 • FLORIDA COA #3205
WEBSITE: WWW.KNEZEVICH.COM • E-MAIL: KA@KNEZEVICH.COM
COPYRIGHT © 2000 KNEZEVICH & ASSOCIATES, INC.

0.050" PERFORATED AND SOLID ALUMINUM STORM PANELS

Safeguard Hurricane Protection Systems, Inc.
1315 Neptune Drive
Boynton Beach, FL 33426
TEL(561) 732-8106 • FAX(561) 732-1435

revisions

no	date	by	description
1	03/14/00	VJK	PREV. DRAWING No. 98-16
2	08/16/00	VJK	GENERAL REVISIONS

V.J. KNEZEVICH
PROFESSIONAL ENGINEER
FL. License No: PE 0010983

AUG 17 2000

date 03/14/00	
scale AS NOTED	drawn by MC
design by VJK	checked by VJK

drawing no. 00-052

sheet 3 of 6

08/17/00 10:37

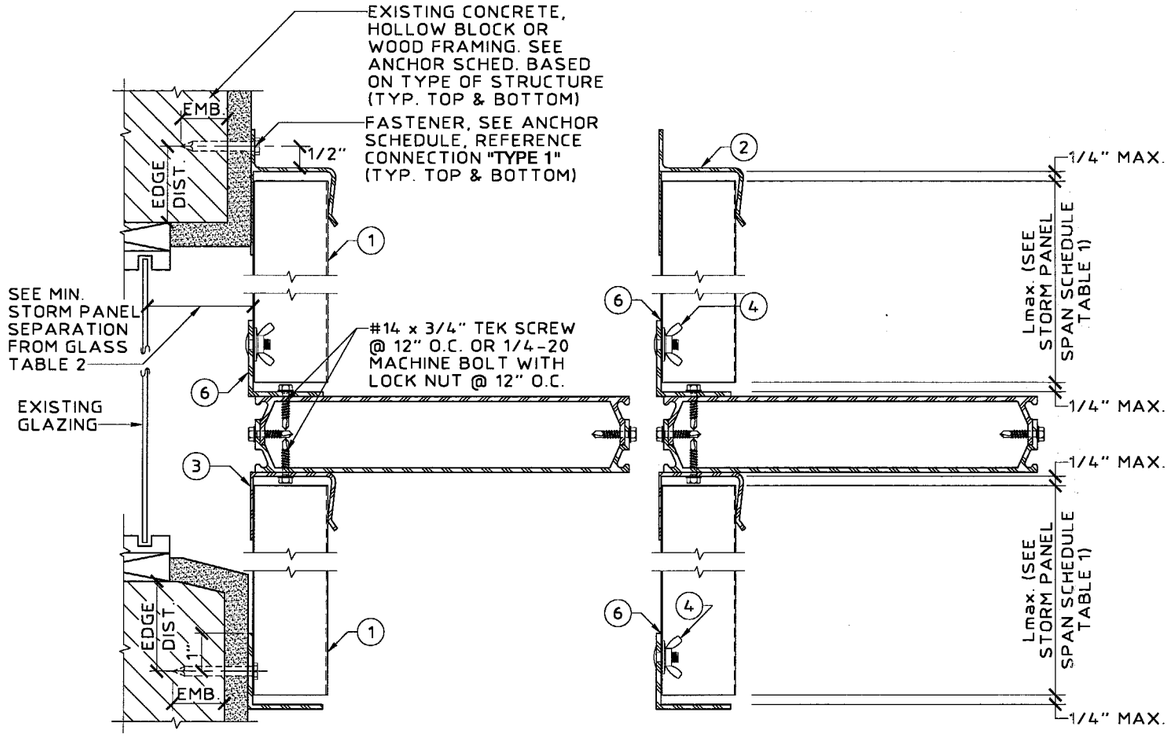

(P) **CARRY BEAM MOUNT SECTION** (SEE TABLE 4)
SCALE: 3" = 1' - 0"

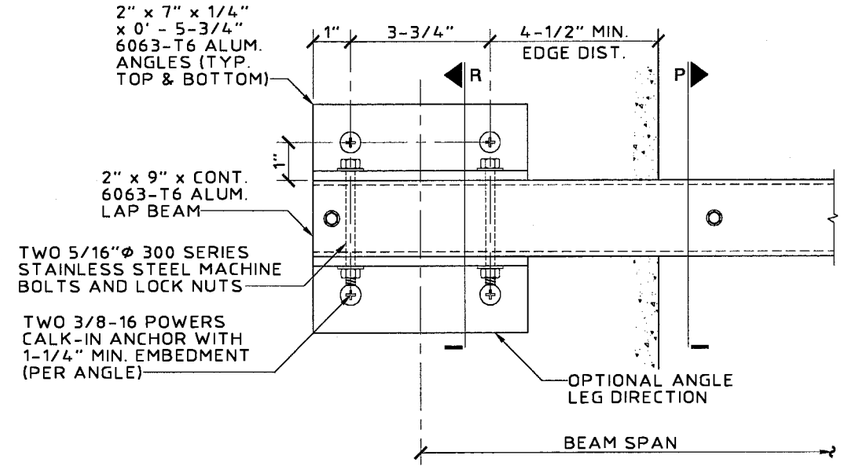

(Q) **CARRY BEAM WALL CONNECTION** (SEE TABLE 4)
SCALE: 3" = 1' - 0"

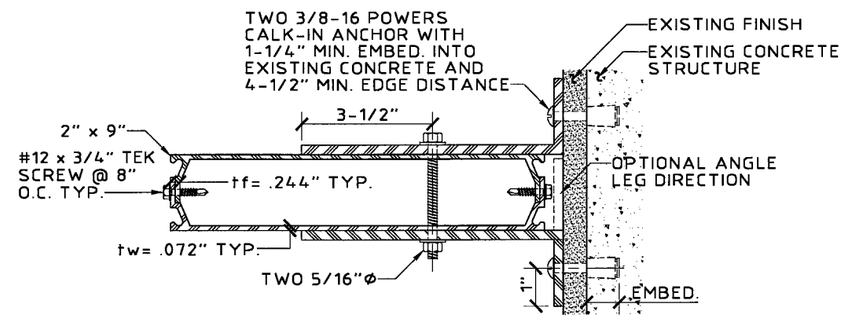

(R) **CARRY BEAM WALL CONNECTION** (SEE TABLE 4)
SCALE: 3" = 1' - 0"

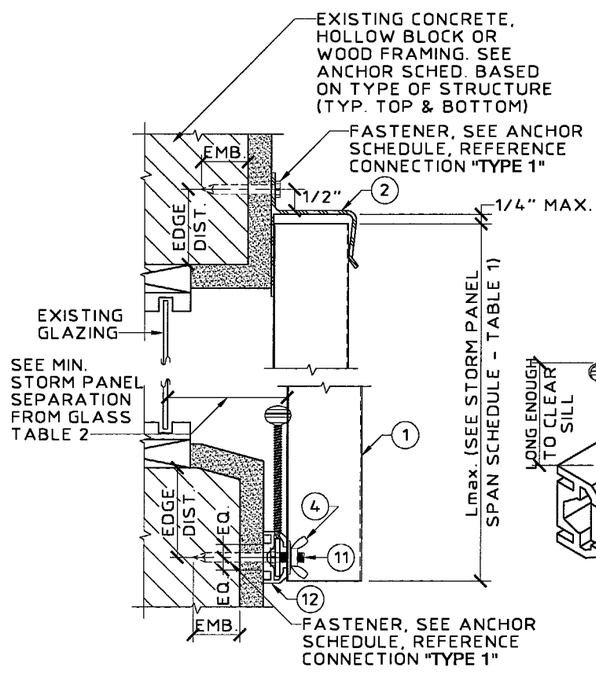

(S) **"SET & SLIDE" ASSEMBLY - INSIDE MOUNT**
SCALE: 3" = 1' - 0"

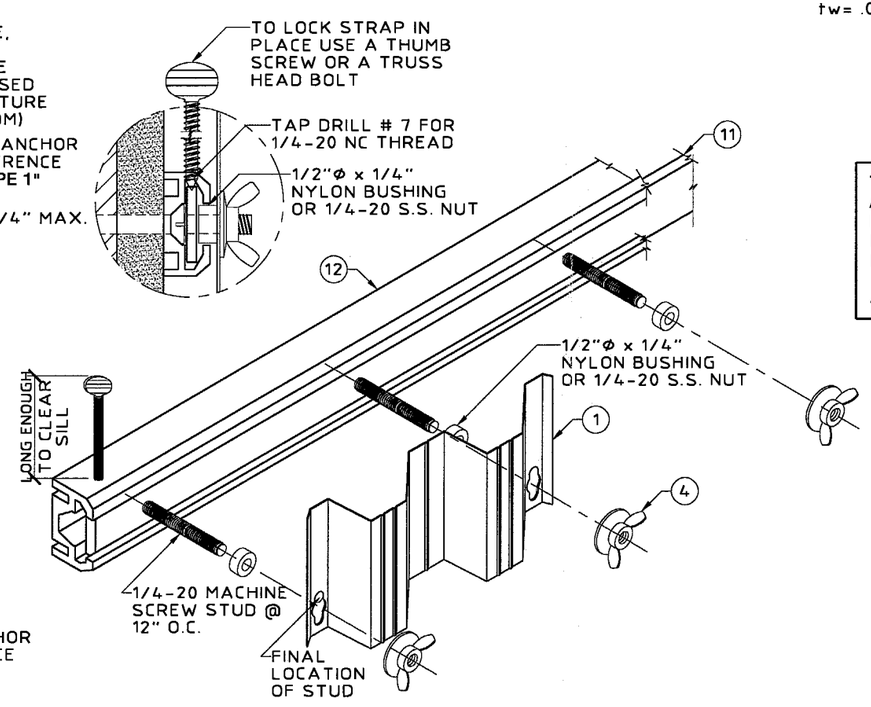

"SET & SLIDE" ASSEMBLY (ISOMETRIC VIEW)
N.T.S.

TABLE 4	2" x 9" 6063-T6 ALUMINUM FLANGE THICKNESS = 0.224" WEB THICKNESS = 0.072"	
PANEL SPAN (FT. - IN.)	"W" BEAM WIND LOAD (P.S.F.)	BEAM SPAN (FT. - IN.)
4-0 6-0 8-0 10-5	44.0	15-6 13-7 12-4 11-3
4-0 6-0 8-0 10-1	50.0	14-11 13-0 11-10 10-11
4-0 6-0 8-0 9-3	60.0	14-0 12-3 10-11 10-4

NOTE: -MEAN ROOF HEIGHT LESS THAN OR EQUAL TO 25' - 0"
-IMPORTANCE FACTOR I = 1.05

APPROVED AS COMPLYING WITH THE SOUTH FLORIDA BUILDING CODE
DATE 09/07/2000
BY
PRODUCT CONTROL DIVISION
BUILDING CODE COMPLIANCE OFFICE
ACCEPTANCE NO. 00-0327.08

KNEZEVICH & ASSOCIATES, INC.
CONSULTING ENGINEERS • PRODUCT TESTING
1260 N. UNIVERSITY DRIVE, SUITE 180 • FORT LAUDERDALE, FL 33322
TEL: (954) 382-2800 • FAX: (954) 382-2989 • FLORIDA COA #3205
WEBSITE: WWW.KNEZEVICH.COM • E-MAIL: KA@KNEZEVICH.COM
COPYRIGHT © 2000 KNEZEVICH & ASSOCIATES, INC.

0.050" PERFORATED AND SOLID ALUMINUM STORM PANELS

Safeguard Hurricane Protection Systems, Inc.
1315 Neptune Drive
Boynton Beach, FL 33426
TEL(561) 732-8106 • FAX(561) 732-1435

revisions

no	date	by	description
1	03/14/00	VJK	PREV. DRAWING No. 98-16
2	08/16/00	VJK	GENERAL REVISIONS

V.J. KNEZEVICH
PROFESSIONAL ENGINEER
FL License No: PE 0010983

AUG 17 2000

date 03/14/00
scale AS NOTED
drawn by MC
design by VJK
checked by VJK
drawing no. 00-052
sheet 4 of 6

08/17/00 10:37

ANCHOR SCHEDULE

FASTENER MAXIMUM SPACING (INCHES) REQUIRED FOR VARIOUS DESIGN LOADS AND SPANS

EXISTING STRUCTURE	ANCHOR TYPE	LOAD (W) P.S.F. MAX. (SEE NOTE 1)	MIN. 2" EDGE DISTANCE: SPANS UP TO 5' - 6" (SEE NOTE 1) CONNECTION TYPE 1	2	3	4	SPANS UP TO 8' - 8" (SEE NOTE 1) CONNECTION TYPE 1	2	3	4	SPANS UP TO 10 - 8" (SEE NOTE 1) CONNECTION TYPE 1	2	3	4	MIN. 3" EDGE DISTANCE: SPANS UP TO 5' - 6" (SEE NOTE 1) CONNECTION TYPE 1	2	3	4	SPANS UP TO 8' - 8" (SEE NOTE 1) CONNECTION TYPE 1	2	3	4	SPANS UP TO 10 - 8" (SEE NOTE 1) CONNECTION TYPE 1	2	3	4
CONCRETE	1/4"Ø ITW OR ELCO TAPCON W/ 1-3/4" MIN. EMBEDMENT (MIN. 3,100 P.S.I. CONCRETE)	48	12	12	12	12	12	12	12	12	12	12	11	9	12	12	12	12	12	12	12	12	12	12	12	11
		62	12	12	12	12	12	12	11	9	12	12	9	8	12	12	12	12	12	12	12	10	12	12	11	9
		72	12	12	12	12	12	12	9	8	12	12	9	8	12	12	12	12	12	12	11	9	12	12	11	9
		92	12	12	12	9	12	12	9	8	12	12	9	8	12	12	12	11	12	12	11	9	12	12	11	9
		200	12	12	9	8	12	12	9	8	12	12	9	8	12	12	11	9	12	12	11	9	12	12	11	9
	3/16"Ø ITW PHILLIPS HEAD TAPCON W/ 1-3/4" MIN. EMBEDMENT (MIN. 3,100 P.S.I. CONCRETE)	48	12	12	12	10	12	12	7	6	12	12	6	5	12	12	12	12	12	12	9	7	12	12	7	6
		62	12	12	9	8	12	12	6	5	12	12	5	4	12	12	11	9	12	12	7	6	12	12	6	5
		72	12	12	8	7	12	12	5	4	12	12	5	4	12	12	9	8	12	12	6	5	12	12	6	5
		92	12	12	6	5	12	12	5	4	12	12	5	4	12	12	7	6	12	12	6	5	12	12	6	5
		200	12	12	5	4	12	12	5	4	12	12	5	4	12	12	6	5	12	12	6	5	12	12	6	5
	* 1/4"Ø POWERS CALK-IN W/ 7/8" EMBEDMENT & 1/4-20 STAINLESS STEEL MACHINE SCREW (MIN. 3,000 P.S.I. CONCRETE)	48	12	12	12	12	12	12	11	9	12	12	9	8	12	12	12	12	12	12	12	12	12	12	12	12
		62	12	12	12	12	12	12	8	7	12	12	7	6	12	12	12	12	12	12	12	12	12	12	12	10
		72	12	12	12	10	12	12	7	6	12	12	7	6	12	12	12	12	12	12	12	10	12	12	12	10
		92	12	12	9	8	12	12	7	6	12	12	7	6	12	12	12	12	12	12	12	10	12	12	12	10
		200	12	12	7	6	12	12	7	6	12	12	7	6	12	12	12	10	12	12	12	10	12	12	12	10
	1/4"Ø POWERS ZAMAC NAILIN ANCHOR WITH 1-1/8" MIN. EMBEDMENT (MIN. 3,000 P.S.I. CONCRETE)	48	12	12	12	11	12	12	9	7	12	12	7	5	12	12	12	12	12	12	11	8	12	12	9	7
		62	12	12	11	8	12	12	7	5	10	12	6	4	12	12	12	10	12	12	8	6	11	12	7	5
		72	12	12	9	7	10	12	6	4	10	12	6	4	12	12	12	9	11	12	7	5	11	12	7	5
		92	12	12	7	5	10	12	6	4	10	12	6	4	12	12	9	7	11	12	7	5	11	12	7	5
		200	10	12	6	4	10	12	6	4	10	12	6	4	11	12	7	5	11	12	7	5	11	12	7	5
	* * 1/4"Ø ELCO MALE/ FEMALE "PANELMATE" W/1-3/4" MIN. EMBED. & 1/4-20 S.S. MACHINE SCREW (MIN. 3,000 P.S.I. CONCRETE)	48	12	12	12	12	12	12	12	12	12	12	12	10	12	12	12	12	12	12	12	12	12	12	12	11
		62	12	12	12	12	12	12	12	9	12	12	10	8	12	12	12	12	12	12	12	10	12	12	12	9
		72	12	12	12	12	12	12	10	8	12	12	10	8	12	12	12	12	12	12	12	9	12	12	12	9
		92	12	12	12	10	12	12	10	8	12	12	10	8	12	12	12	11	12	12	12	9	12	12	12	9
		200	12	12	10	8	12	12	10	8	12	12	10	8	12	12	12	9	12	12	12	9	12	12	12	9
	* 1/4"Ø TRU-FAST TAP GRIP CF W/ 1-1/2" MIN. EMBEDMENT (MIN. 3,000 P.S.I. CONCRETE)	48	12	12	12	12	12	12	12	11	12	12	10	9	12	12	12	12	12	12	12	12	12	12	12	11
		62	12	12	12	12	12	12	10	8	12	12	8	7	12	12	12	12	12	12	12	10	12	12	11	9
		72	12	12	12	11	12	12	8	7	12	12	8	7	12	12	12	12	12	12	11	9	12	12	11	9
		92	12	12	10	9	12	12	8	7	12	12	8	7	12	12	12	11	12	12	11	9	12	12	11	9
		200	12	12	8	7	12	12	8	7	12	12	8	7	12	12	11	9	12	12	11	9	12	12	11	9

ANCHOR SCHEDULE

FASTENER MAXIMUM SPACING (INCHES) REQUIRED FOR VARIOUS DESIGN LOADS AND SPANS

EXISTING STRUCTURE	ANCHOR TYPE	LOAD (W) P.S.F. MAX. (SEE NOTE 1)	MIN. 2" EDGE DISTANCE: SPANS UP TO 5' - 6" (SEE NOTE 1) CONNECTION TYPE 1	2	3	4	SPANS UP TO 8' - 8" (SEE NOTE 1) CONNECTION TYPE 1	2	3	4	SPANS UP TO 10 - 8" (SEE NOTE 1) CONNECTION TYPE 1	2	3	4	MIN. 3" EDGE DISTANCE: SPANS UP TO 5' - 6" (SEE NOTE 1) CONNECTION TYPE 1	2	3	4	SPANS UP TO 8' - 8" (SEE NOTE 1) CONNECTION TYPE 1	2	3	4	SPANS UP TO 10 - 8" (SEE NOTE 1) CONNECTION TYPE 1	2	3	4
HOLLOW BLOCK	1/4"Ø ITW OR ELCO TAPCON W/ 1-1/4" MIN. EMBEDMENT	48	12	12	10	8	10	12	6	5	8	12	5	4	12	12	12	9	11	12	7	6	9	12	6	4
		62	12	12	8	6	8	11	5	4	7	10	4	3	12	12	9	7	9	12	6	4	7	10	5	4
		72	11	12	7	5	7	10	4	3	7	10	4	3	12	12	8	6	7	11	5	4	7	10	5	4
		92	8	12	5	4	7	10	4	3	7	10	4	3	9	12	6	4	7	10	5	4	7	10	5	4
		200	7	10	4	3	7	10	4	3	7	10	4	3	7	10	5	4	7	10	5	4	7	10	5	4
	3/16"Ø ITW PHILLIPS HEAD TAPCON W/ 1-1/4" MIN. EMBEDMENT	48	9	12	6	5	6	8	4	3	5	7	3		10	12	7	5	6	9	4	3	5	7	3	
		62	7	10	5	3	4	6	3		4	5			8	11	5	4	5	7	3		4	6	3	
		72	6	9	4	3	4	5			4	5			7	10	5	3	4	6	3		4	6	3	
		92	5	7	3		4	5			4	5			5	7	4	3	4	6	3		4	6	3	
		200	4	5			4	5			4	5			4	6	3		4	6	3		4	6	3	
	* 1/4"Ø POWERS CALK-IN W/ 7/8" EMBEDMENT & 1/4-20 STAINLESS STEEL MACHINE SCREW	48	12	12	10	8	12	12	6	5	11	12	5	4	12	12	12	12	12	12	10	8	12	12	8	6
		62	12	12	8	6	10	12	5	4	8	12	4	3	12	12	12	10	12	12	8	6	11	12	7	5
		72	12	12	7	5	9	12	4	3	8	12	4	3	12	12	11	8	11	12	7	5	11	12	7	5
		92	11	12	5	4	8	12	4	3	8	12	4	3	12	12	8	6	11	12	7	5	11	12	7	5
		200	8	12	4	3	8	12	4	3	8	12	4	3	11	12	7	5	11	12	7	5	11	12	7	5
	1/4"Ø POWERS ZAMAC NAILIN ANCHOR WITH 1-1/8" MIN. EMBEDMENT	48	12	12	11	8	11	12	7	5	9	12	5	4	12	12	12	10	12	12	8	6	10	12	7	5
		62	12	12	8	6	8	12	5	4	7	10	4	3	12	12	10	8	9	12	6	5	8	11	5	4
		72	11	12	7	5	7	10	4	3	7	10	4	3	12	12	9	7	8	11	5	4	8	11	5	4
		92	9	12	6	4	7	10	4	3	7	10	4	3	10	12	7	5	8	11	5	4	8	11	5	4
		200	7	10	4	3	7	10	4	3	7	10	4	3	8	11	5	4	8	11	5	4	8	11	5	4
	* * 1/4"Ø ELCO MALE/ FEMALE "PANELMATE" W/ 1-1/4" MIN. EMBED. & 1/4-20 S.S. MACHINE SCREW	48	12	12	12	10	12	12	8	6	12	12	6	5	12	12	12	11	12	12	9	7	12	12	7	6
		62	12	12	9	7	12	12	6	5	10	12	5	4	12	12	11	9	12	12	7	5	10	12	6	4
		72	12	12	8	6	10	12	5	4	10	12	5	4	12	12	9	7	10	12	6	4	10	12	6	4
		92	12	12	6	5	10	12	5	4	10	12	5	4	12	12	7	6	10	12	6	4	10	12	6	4
		200	10	12	5	4	10	12	5	4	10	12	5	4	10	12	6	4	10	12	6	4	10	12	6	4
	* 1/4"Ø TRU-FAST TAP GRIP CF W/ 1-1/4" MIN. EMBEDMENT	48	12	12	9	7	9	12	6	4	7	11	5	3	12	12	12	9	11	12	7	5	8	12	6	4
		62	11	12	7	5	7	10	4	3	6	9	4	3	12	12	9	7	8	11	5	4	7	10	5	3
		72	10	12	6	5	6	9	4	3	6	9	4	3	11	12	7	6	7	10	5	3	7	10	5	3
		92	8	11	5	3	6	9	4	3	6	9	4	3	9	12	6	4	7	10	5	3	7	10	5	3
		200	6	9	4	3	6	9	4	3	6	9	4	3	7	10	5	3	7	10	5	3	7	10	5	3

ANCHOR NOTES:

1. SPANS AND LOADS SHOWN HERE ARE FOR DETERMINING ANCHOR SPACING ONLY. ALLOWABLE STORM PANEL SPANS FOR SPECIFIC LOADS MUST BE LIMITED TO THOSE SHOWN IN TABLE 1.
2. ENTER ANCHOR SCHEDULE BASED ON THE EXISTING STRUCTURE MATERIAL, ANCHOR TYPE AND EDGE DISTANCE. SELECT DESIGN LOAD GREATER THAN OR EQUAL TO NEGATIVE DESIGN LOAD ON SHUTTER AND SELECT SPAN GREATER THAN OR EQUAL TO SHUTTER SPAN.
3. EXISTING STRUCTURE MAY BE CONCRETE, HOLLOW BLOCK OR WOOD FRAMING. REFERENCE ANCHOR SCHEDULE FOR PROPER ANCHOR TYPE BASED ON TYPE OF EXISTING STRUCTURE AND APPROPRIATE CONNECTION TYPE. SEE MOUNTING SECTION DETAILS FOR IDENTIFICATION OF CONNECTION TYPE.
4. ANCHORS SHALL BE INSTALLED IN ACCORDANCE WITH MANUFACTURERS' RECOMMENDATIONS.
5. MINIMUM EMBEDMENT AND EDGE DISTANCE EXCLUDES WALL FINISH OR STUCCO.
6. WHERE EXISTING STRUCTURE IS WOOD FRAMING, WOOD FRAMING CONDITIONS VARY. FIELD VERIFY THAT FASTENERS ARE INTO ADEQUATE WOOD FRAMING MEMBERS, NOT PLYWOOD. FASTENING TO PLYWOOD IS ACCEPTABLE ONLY FOR SIDE CLOSURE PIECES.
7. WHERE LAG SCREWS FASTEN TO NARROW FACE OF STUD FRAMING, FASTENER SHALL BE LOCATED IN CENTER OF NOMINAL 2" x 4" (MIN.) WOOD STUD. 3/4" EDGE DISTANCE IS ACCEPTABLE FOR WOOD FRAMING. WOOD STUD SHALL BE "SOUTHERN PINE" G=0.55 OR GREATER DENSITY. LAG SCREWS SHALL HAVE PHILLIPS PAN HEAD OR HEX HEAD.
8. MACHINE SCREWS SHALL HAVE MINIMUM OF 1/2" ENGAGEMENT OF THREADS IN BASE ANCHOR AND MAY HAVE EITHER A PAN HEAD, TRUSS HEAD, OR WAFER HEAD (SIDEWALK BOLT), U.O.N.
9. DESIGNATES ANCHOR CONDITIONS WHICH ARE NOT ACCEPTABLE USES.
10. * DESIGNATES ANCHORS WHICH ARE REMOVABLE BY REMOVING MACHINE SCREW, NUT OR WASHERED WINGNUT.

APPROVED AS COMPLYING WITH THE
SOUTH FLORIDA BUILDING CODE
DATE 09/07/2000
BY Helmy H. Mak
PRODUCT CONTROL DIVISION
BUILDING CODE COMPLIANCE OFFICE
ACCEPTANCE NO. 00-0327.08

KNEZEVICH & ASSOCIATES, INC.
CONSULTING ENGINEERS • PRODUCT TESTING
1260 N. UNIVERSITY DRIVE, SUITE 160 • FORT LAUDERDALE, FL 33322
TEL: (954) 382-2800 • FAX: (954) 382-2989 • FLORIDA COA #3205
WEBSITE: WWW.KNEZEVICH.COM • E-MAIL: KA@KNEZEVICH.COM

COPYRIGHT © 2000 KNEZEVICH & ASSOCIATES, INC.

0.050" PERFORATED AND SOLID ALUMINUM STORM PANELS

Safeguard Hurricane Protection Systems, Inc.
1315 Neptune Drive
Boynton Beach, FL 33426
TEL(561) 732-8106 • FAX(561) 732-1435

revisions

no	date	by	description
1	03/14/00	VJK	PREV. DRAWING No. 98-16
2	08/16/00	VJK	GENERAL REVISIONS

V.J. KNEZEVICH
PROFESSIONAL ENGINEER
FL License No: PE 0010963
AUG 17 2000

date 03/14/00
scale AS NOTED
drawn by MC
design by VJK
checked by VJK
drawing no. 00-052
sheet 5 of 6

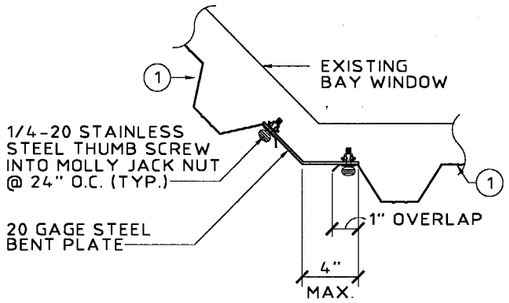

(S) TYPICAL CORNER DETAIL
SCALE: 1-1/2" = 1' - 0"

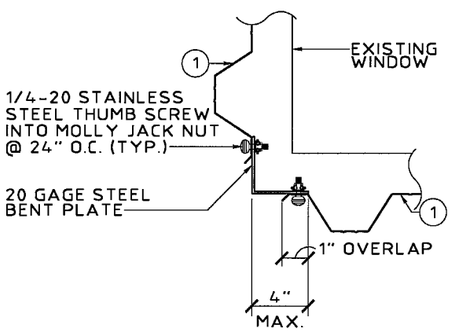

(T) TYPICAL CORNER DETAIL
SCALE: 1-1/2" = 1' - 0"

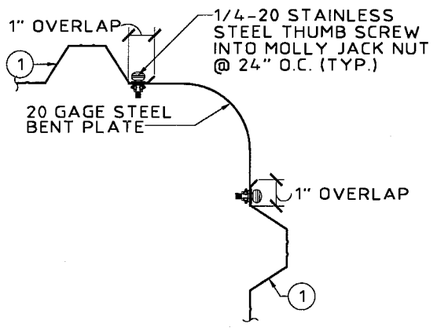

(U) TYPICAL CORNER DETAIL
SCALE: 1-1/2" = 1' - 0"

NOTES FOR TABLES 1 & 2:

1. SITE SPECIFIC WIND LOAD CALCULATION BY PROFESSIONAL ENGINEER.
2. ENTER TABLE 1 WITH NEGATIVE DESIGN LOAD TO DETERMINE MAX. ALLOWABLE STORM PANEL SPAN. POSITIVE LOADS LESS THAN OR EQUAL TO THE NEGATIVE LOADS ARE ACCEPTABLE.
3. FOR DESIGN LOADS BETWEEN TABULATED VALUES, USE NEXT HIGHER LOAD OR LINEAR INTERPOLATION MAY BE USED TO DETERMINE MAX. ALLOWABLE STORM PANEL SPANS.
4. ENTER TABLE 2 WITH POSITIVE DESIGN LOAD TO DETERMINE MIN. STORM PANEL SEPARATION FROM GLASS.

TABLE 2 — MINIMUM STORM PANEL SEPARATION FROM GLASS

POSITIVE DESIGN LOAD (W) (P.S.F.)	ACTUAL SPAN (L) (FT - IN)	PERFORATED: MIN. SEP. FOR ALL INSTALLATIONS LESS THAN 30' ABOVE GRADE (INCHES) — COLUMN 1 WITHOUT MIDSPAN SEAM BOLTS	PERFORATED: MIN. SEP. FOR ALL INSTALLATIONS LESS THAN 30' ABOVE GRADE (INCHES) — COLUMN 2 WITH MIDSPAN SEAM BOLTS	PERFORATED: MIN. SEP. FOR ALL INSTALLATIONS GREATER THAN 30' ABOVE GRADE (INCHES) — COLUMN 3	SOLID: MIN. SEP. FOR ALL INSTALLATIONS LESS THAN 30' ABOVE GRADE (INCHES) — COLUMN 1 WITHOUT MIDSPAN SEAM BOLTS	SOLID: MIN. SEP. FOR ALL INSTALLATIONS LESS THAN 30' ABOVE GRADE (INCHES) — COLUMN 2 WITH MIDSPAN SEAM BOLTS	SOLID: MIN. SEP. FOR ALL INSTALLATIONS GREATER THAN 30' ABOVE GRADE (INCHES) — COLUMN 3
30.0	5 - 0	4-1/2	3	1-1/8	3	3	1-1/8
	8 - 11	4-1/2	3	2	4-1/2	3	1-3/4
	10 - 9	4-1/2	3-3/4	3	4-1/2	3-3/4	2-1/2
40.0	5 - 0	4-1/2	3	1-1/8	3	3	1-1/8
	9 - 7	4-1/2	3-1/4	2-3/4	4-1/2	3-1/4	2-1/4
	10 - 9	4-1/2	3-3/4	3-3/4	4-1/2	3-3/4	3
50.0	5 - 0	4-1/2	3	1-1/4	3	3	1-1/8
	7 - 0	4-1/2	3	1-5/8	4-1/2	3	1-1/2
	8 - 11	4-1/2	3	2-5/8	4-1/2	3	2-1/4
	10 - 2	4-1/2	3-3/4	3-3/4	4-1/2	3-3/4	3
60.0	5 - 0	4-1/2	3	1-1/4	3	3	1-1/4
	7 - 0	4-1/2	3	1-3/4	4-1/2	3	1-1/2
	9 - 3	4-1/2	3-3/8	3-3/8	4-1/2	3-1/4	2-5/8
70.0	5 - 0	4-1/2	3	1-1/4	3	3	1-1/4
	8 - 7	4-1/2	3-1/4	3	4-1/2	3-1/4	2-1/2

ANCHOR SCHEDULE
FASTENER MAXIMUM SPACING (INCHES) REQUIRED FOR VARIOUS DESIGN LOADS AND SPANS

EXISTING STRUCTURE	ANCHOR TYPE	LOAD (W) P.S.F. MAX. (SEE NOTE 1)	MIN. 3/4" EDGE DISTANCE — SPANS UP TO 5' - 6" (SEE NOTE 1) CONNECTION TYPE 1	2	3	4	SPANS UP TO 8' - 8" (SEE NOTE 1) CONNECTION TYPE 1	2	3	4	SPANS UP TO 10 - 8" (SEE NOTE 1) CONNECTION TYPE 1	2	3	4
WOOD	T ≥ 1-5/8" 1/4"Ø WOOD LAG SCREW W/ MIN. 1-5/8" THREADED PENETRATION "T" SHEAR PARALLEL OR PERPENDICULAR TO WOOD GRAIN	48	12	12	12	12	12	12	10	9	12	12	8	7
		62	12	12	12	11	12	12	8	7	12	12	7	6
		72	12	12	11	9	12	12	7	6	12	12	7	6
		92	12	12	8	7	12	12	7	6	12	12	7	6
		200	12	12	7	6	12	12	7	6	12	12	7	6
	3/16"Ø PHILLIPS HEAD WOOD SCREW W/ MINIMUM 1-5/8" PENETRATION SHEAR PARALLEL OR PERPENDICULAR TO WOOD GRAIN	48	12	12	12	12	12	12	9	7	12	12	7	6
		62	12	12	11	9	12	12	7	5	12	12	6	5
		72	12	12	9	8	12	12	6	5	12	12	6	5
		92	12	12	7	6	12	12	6	5	12	12	6	5
		200	12	12	6	5	12	12	6	5	12	12	6	5
	* * 1/4"Ø ELCO MALE/ FEMALE "PANELMATE" W/ 7/8" MIN. EMBED. & 1/4-20 S.S. MACHINE SCREW	48	12	12	12	12	12	12	12	11	12	12	10	9
		62	12	12	12	12	12	12	10	8	12	12	8	7
		72	12	12	12	12	12	12	8	7	12	12	8	7
		92	12	12	11	9	12	12	8	7	12	12	8	7
		200	12	12	8	7	12	12	8	7	12	12	8	7
	* 5/16"Ø WOOD BUSHING W/ 7/8" MIN. PENETRATION & 1/4-20 SIDEWALK BOLT	48	12	12	12	10	12	12	9	6	10	12	7	5
		62	12	12	11	8	10	12	7	5	8	12	6	4
		72	12	12	9	7	8	12	6	4	8	12	6	4
		92	10	12	7	5	8	12	6	4	8	12	6	4
		200	8	12	6	4	8	12	6	4	8	12	6	4

FOR COMPLETE ANCHOR SCHEDULE NOTES SEE SHEET 5 OF 6

TABLE 1 — MAX. ALLOWABLE SOLID AND / OR PERFORATED STORM PANEL SPAN SCHEDULE

NEG. DESIGN LOAD (P.S.F.)	SPAN (FT - IN)
40.0	10 - 8
45.0	10 - 5
48.0	10 - 1
50.0	10 - 1
51.0	10 - 0
55.0	9 - 8
60.0	9 - 3
62.0	9 - 1
65.0	8 - 10
66.0	8 - 9
70.0	8 - 7
72.0	8 - 6
75.0	8 - 3
80.0	7 - 9
90.0	6 - 11
98.0	6 - 2
100.0	6 - 3
110.0	5 - 8
120.0	5 - 2
130.0	4 - 9
140.0	4 - 5
150.0	4 - 2
160.0	3 - 10
170.0	3 - 8
180.0	3 - 5
190.0	3 - 3
200.0	3 - 1

APPROVED AS COMPLYING WITH THE SOUTH FLORIDA BUILDING CODE
DATE 09/07/2000
BY [signature]
PRODUCT CONTROL DIVISION
BUILDING CODE COMPLIANCE OFFICE
ACCEPTANCE NO. 00-0327.08

KNEZEVICH & ASSOCIATES, INC.
CONSULTING ENGINEERS • PRODUCT TESTING
1260 N. UNIVERSITY DRIVE, SUITE 180 • FORT LAUDERDALE, FL 33322
TEL: (954) 382-2800 • FAX: (954) 382-2989 • FLORIDA COA #3205
WEBSITE: WWW.KNEZEVICH.COM • E-MAIL: KA@KNEZEVICH.COM
COPYRIGHT © 2000 KNEZEVICH & ASSOCIATES, INC.

0.050" PERFORATED AND SOLID ALUMINUM STORM PANELS

Safeguard Hurricane Protection Systems, Inc.
1315 Neptune Drive
Boynton Beach, FL 33426
TEL(561) 732-8106 • FAX(561) 732-1435

revisions

no	date	by	description
1	03/14/00	VJK	PREV DRAWING No. 98-16
2	08/16/00	VJK	GENERAL REVISIONS

V.J. KNEZEVICH
PROFESSIONAL ENGINEER
FL License No: PE 0010983
AUG 17 2000

date 03/14/00
scale AS NOTED
drawn by MC
design by VJK
checked by VJK
drawing no. 00-052
sheet 6 of 6

08/17/00 10:39