MIAMI-DADE COUNTY, FLORIDA
METRO-DADE FLAGLER BUILDING

BUILDING CODE COMPLIANCE OFFICE
METRO-DADE FLAGLER BUILDING
140 WEST FLAGLER STREET, SUITE 1603
MIAMI, FLORIDA 33130-1563
(305) 375-2901 FAX (305) 375-2908

CONTRACTOR LICENSING SECTION
(305) 375-2527 FAX (305) 375-2558

CONTRACTOR ENFORCEMENT SECTION
(305) 375-2966 FAX (305) 375-2908

PRODUCT CONTROL DIVISION
(305) 375-2902 FAX (305) 372-6339

PRODUCT CONTROL NOTICE OF ACCEPTANCE

All Broward Hurricane Panel, Inc
450 West McNab Rd
Fort Lauderdale FL 33309

Your application for Product Approval of:
Foam-Fill Rollup Shutter
under Chapter 8 of the Code of Miami-Dade County governing the use of Alternate Materials and Types of Construction, and completely described herein, has been recommended for acceptance by the Miami-Dade County Building Code Compliance Office (BCCO) under the conditions specified herein.

This approval shall not be valid after the expiration date stated below. BCCO reserves the right to secure this product or material at anytime from a jobsite or manufacturer's plant for quality control testing.
If this product or material fails to perform in the approved manner, BCCO may revoke, modify, or suspend the use of such product or material immediately. BCCO reserves the right to revoke this approval, if it is determined BCCO that this product or material fails to meet the requirements of the South Florida Building Code.

The expense of such testing will be incurred by the manufacturer.

Acceptance No.: 00-0328.07

Expires: 05/19/2003

Raul Rodriguez
Chief Product Control Division

THIS IS THE COVERSHEET, SEE ADDITIONAL PAGES FOR SPECIFIC AND GENERAL CONDITIONS

BUILDING CODE & PRODUCT REVIEW COMMITTEE

This application for Product Approval has been reviewed by the BCCO and approved by the Building Code and Product Review Committee to be used in Dade County, Florida under the conditions set forth above.

Francisco J. Quintana, R.A.
Director
Miami-Dade County
Building Code Compliance Office

Approved: 05/19/2000

Internet mail address: postmaster@buildingcodeonline.com **Homepage: http://www.buildingcodeonline.com**

NOTICE OF ACCEPTANCE: SPECIFIC CONDITIONS

1. SCOPE

This approves an aluminum slat roll-up shutter, as described in Section 2 of this Notice of Acceptance, designed to comply with the South Florida Building Code, 1994 Edition for Miami-Dade County (SFBC). For the locations where the pressure requirements, as determined by SFBC Chapter 23, do not exceed the Design Pressure Rating values indicated in the approved drawings.

2. PRODUCT DESCRIPTION

The **Roll-Up Shutter with SAR/155A Slat** and its components shall be constructed in strict compliance with the following documents: Drawing No. 99-227, titled "Magnum Force Premier Foam-Fill Rollup" prepared by Tilteco, Inc., dated 07/16/99, with no revisions, sheets 1 through 11 of 11. They bear the Miami-Dade County Product Control Approval stamp with the Notice of Acceptance number and approval date by the Miami-Dade County Product Control Division. These documents shall hereinafter be referred to as the approved drawings.

3. LIMITATIONS

3.1 Minimum slat engagement shall be 1.25".

3.2 Minimum separation from interior of slat to glass being protected shall be as shown on sheet 8 of 11.

3.3 The operating mechanism, not part of this approval shall be certified by a recognized testing agency.

3.4 All permanent set components, included but not limited to embedded anchor bolts, threaded cones, metal shields, etc., must be protected against corrosion, contamination and damage at all time.

4. INSTALLATION

The Aluminum Slat Roll-Up Shutter and its components shall be installed in strict compliance with the approved drawings.

5. LABELING

Each shutter shall bear a permanent label with the manufacturer's name or logo, city, state and following statement: "Miami-Dade County Product Control Approved".

6. BUILDING PERMIT REQUIREMENTS

6.1 Application for building permit shall be accompanied by copies of the following:

6.1.1 This Notice of Acceptance.

6.1.2 Duplicate copies of the approved drawings, as identified in Section 2 of this Notice of Acceptance, clearly marked to show the components selected for the proposed installation.

6.1.3 Any other documents required by the Building Official or the South Florida Building Code (SFBC) in order to properly evaluate the installation of this system.

Candido F. Font, P.E., Sr. Product Control Examiner
Product Control Division

All Broward Hurricane Panel, Inc..

ACCEPTANCE No. : 00-0328.07

APPROVED : MAY 1 9 2000

EXPIRES : MAY 1 9 2003

NOTICE OF ACCEPTANCE: STANDARD CONDITIONS

1 Renewal of this Acceptance (approval) shall be considered after a renewal application has been filed and the original submitted documents, including test-supporting data, engineering documents, are no older than eight (8) years.

2. Any and all approved products shall be permanently labeled with the manufacturer's name, city, state, and the following statement: "Miami-Dade County Product Control Approval", or as specifically stated in the specific conditions of this Acceptance.

3. Renewals of Acceptance will not be considered if:
   a. There has been a change in the South Florida Building Code affecting the evaluation of this product and the product is not in compliance with the code changes.
   b. The product is no longer the same product (identical) as the one originally approved.
   c. If the Acceptance holder has not complied with all the requirements of this acceptance, including the correct installation of the product.
   d. The engineer who originally prepared, signed and sealed the required documentation initially submitted, is no longer practicing the engineering profession.

4. Any revision or change in the materials, use, and/or manufacture of the product or process shall automatically be cause for termination of this Acceptance, unless prior written approval has been requested (through the filing of a revision application with appropriate fee) and granted by this office.

5. Any of the following shall also be grounds for removal of this Acceptance:
   a. Unsatisfactory performance of this product or process.
   b. Misuse of this Acceptance as an endorsement of any product, for sales, advertising or any other purposes.

6. The Notice of Acceptance number preceded by the words Miami-Dade County, Florida, and followed by the expiration date may be displayed in advertising literature. If any portion of the Notice of Acceptance is displayed, then it shall be done in its entirety.

7. A copy of this Acceptance as well as approved drawings and other documents, where it applies, shall be provided to the user by the manufacturer or its distributors and shall be available for inspection at the job site at all time. The engineer need not reseal the copies.

8. Failure to comply with any section of this Acceptance shall be cause for termination and removal of Acceptance.

9. This Notice of Acceptance consists of pages 1, 2 and this last page 3.

END OF THIS ACCEPTANCE

Candido F. Font, P.E., Sr. Product Control Examiner
Product Control Division

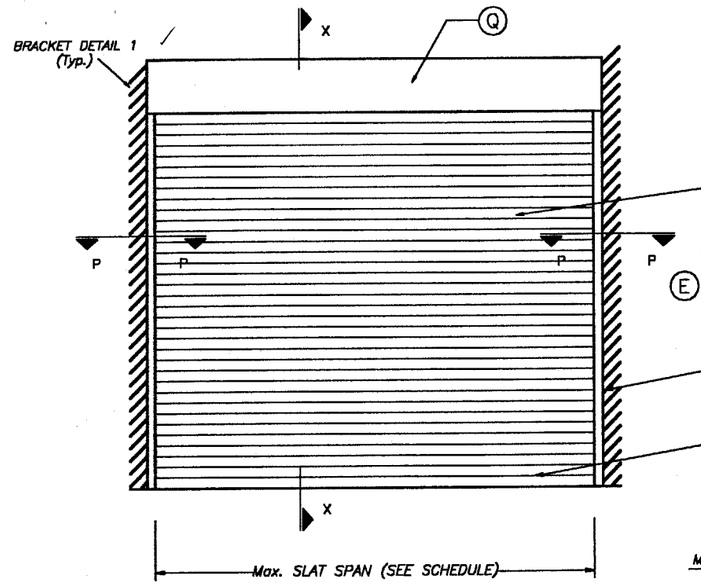

TYPICAL SINGLE UNIT ELEVATION (NO STORM BARS REQUIRED)

NOTE: SEE SHEET 2 & 3 OF 11 FOR COMPONENTS NOMENCLATURE.
SEE SECTIONS ON SHEETS 4, 5, 6 & 7 OF 11.

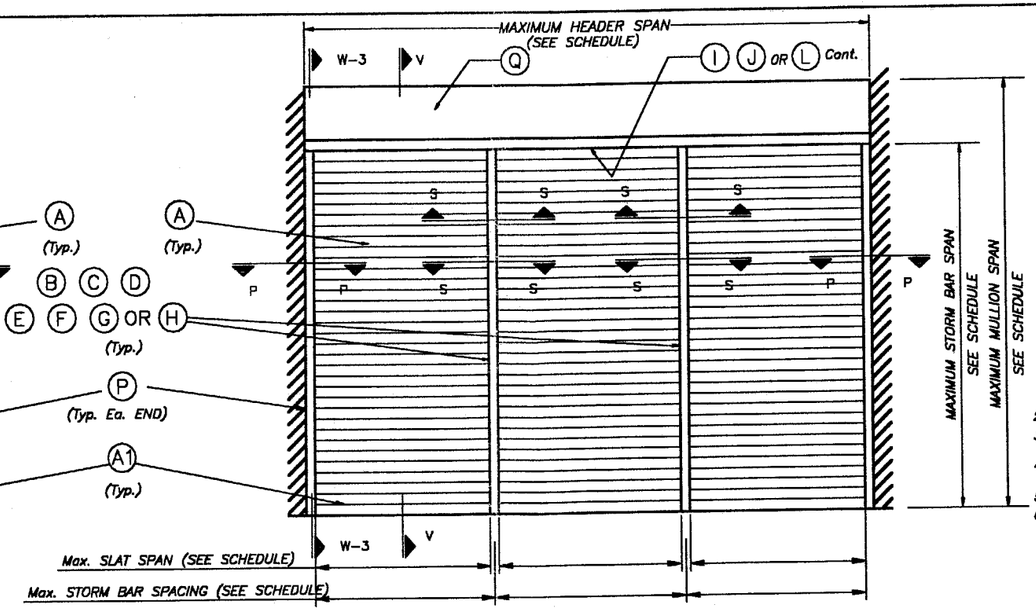

TYPICAL MULTIPLE UNIT ELEVATION (STORM BARS REQUIRED)

NOTE: SEE SHEET 2 & 3 OF 11 FOR COMPONENTS NOMENCLATURE.
SEE SECTIONS ON SHEETS 4, 5, 6 & 7 OF 11.

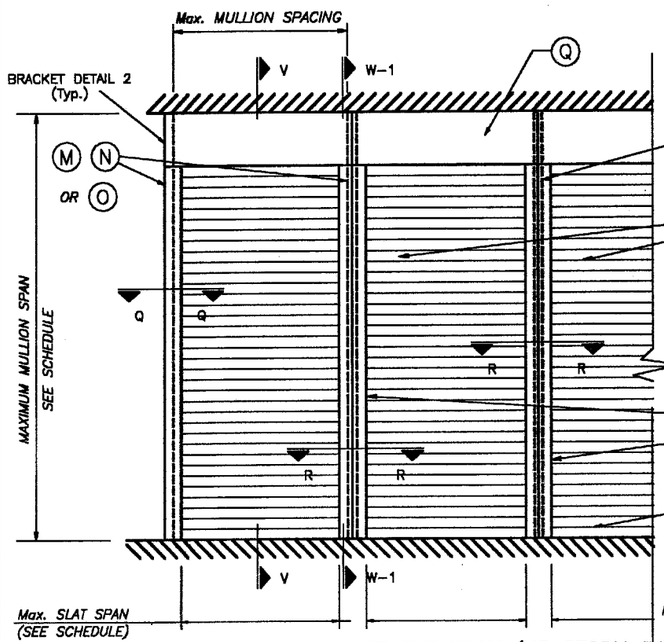

TYPICAL CONSECUTIVE SINGLE UNIT ELEVATION (NO STORM BARS REQUIRED)

NOTE: SEE SHEET 2 & 3 OF 11 FOR COMPONENTS NOMENCLATURE.
SEE SECTIONS ON SHEETS 4, 5, 6 & 7 OF 11.

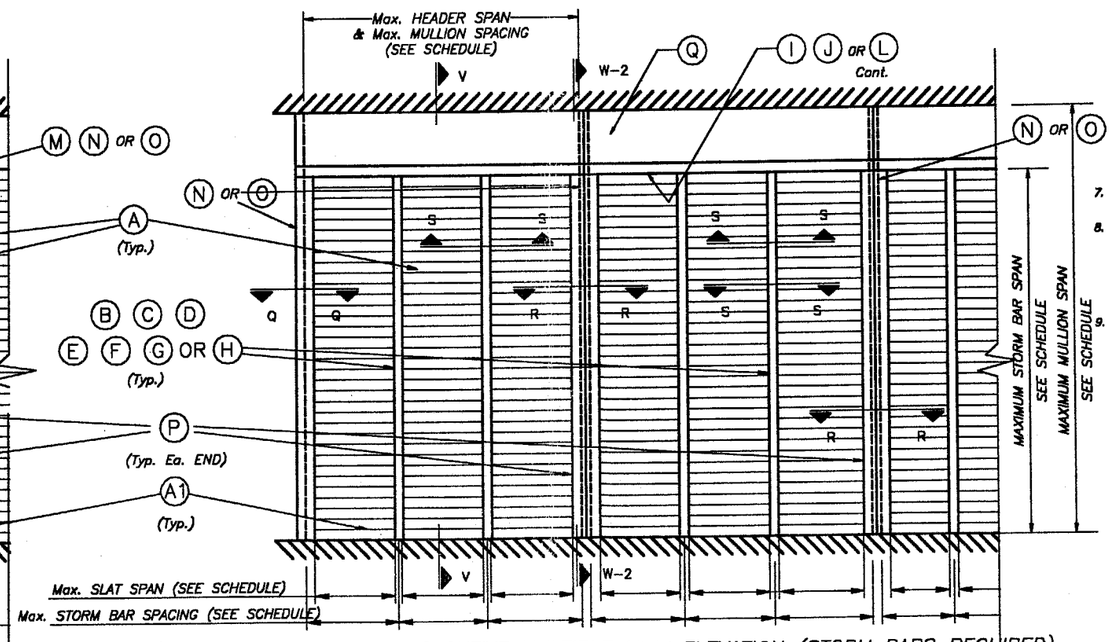

TYPICAL CONSECUTIVE MULTIPLE UNIT ELEVATION (STORM BARS REQUIRED)

NOTE: SEE SHEET 2 & 3 OF 11 FOR COMPONENTS NOMENCLATURE.
SEE SECTIONS ON SHEETS 4, 5, 6 & 7 OF 11.

GENERAL NOTES:

1. ROLL-UP SHUTTER HAS BEEN DESIGNED IN ACCORDANCE WITH THE DADE COUNTY, 1994 EDITION OF THE SOUTH FLORIDA BUILDING CODE.
   WIND VELOCITY CONSIDERED SHALL BE 110 m.p.h. IMPORTANCE FACTOR IS 1.05.
   COASTAL ZONE WIND LOADS SHALL BE DETERMINED FOR EXPOSURE "D" FOR BUILDINGS WITH MEAN ROOF HEIGHT OVER 60'-0" ONLY, AND FOR EXPOSURE "C" FOR BUILDINGS WITH MEAN ROOF HIEGHT EQUAL OR LESS THAN 60'-0". NON COASTAL ZONE WIND LOADS SHALL BE DETERMINED FOR EXPOSURE "C", AS REQUIRED BY ASCE 7-88.
   ROLL-UP SHUTTER'S ADEQUACY FOR IMPACT AND FATIGUE RESISTANCE HAS BEEN VERIFIED IN ACCORDANCE WITH SECTIONS 2315 & 2314 RESPECTIVELY OF THE ABOVE MENTIONED CODE.
2. ALL ALUMINUM EXTRUSIONS SHALL BE 6063-T6 ALLOY (UNLESS OTHERWISE NOTED).
3. ALL SCREWS TO BE STAINLESS STEEL 304 OR 316 SERIES W/50 ksi YIELD POINT AND 90 ksi TENSILE STRENGTH.
4. BOLTS TO BE 2024-T4 ALUMINUM ALLOY, GALVANIZED OR STAINLESS STEEL WITH 36 ksi MINIMUM YIELD POINT.
5. STORM BARS SHALL REMAIN IN PLACE AT ALL TIMES.
6. ANCHORS TO WALL SHALL BE AS FOLLOWS: (UNLESS OTHERWISE NOTED)
   (A) TO EXISTING POURED CONCRETE: (MINIMUM 3000 psi COMPRESSION STRENGTH.)
   -1/4" ø TAPCON ANCHORS OR 1/4" ø RAWL ZAMAC NAILIN, AS MANUFACTURED BY I.T.W./RANSET, OR ELCO INDUSTRIES AND THE RAWL PLUG CO., INC., RESPECTIVELY W/ 3.0" MINIMUM EDGE DISTANCE.
   NOTES:
   A.1) MINIMUM EMBEDMENT OF CONCRETE ANCHORS INTO THE CONCRETE UNIT SHALL BE 1 1/2". NO EMBEDMENT INTO STUCCO SHALL BE CONSIDERED AS PART OF THE REQUIRED EMBEDMENT.
   A.2) IN CASE THAT PRECAST STONE, PRECAST CONCRETE PANELS, OR PAVERS BE FOUND ON THE EXISTING WALL OR FLOOR, ANCHORS SHALL BE LONG ENOUGH TO REACH THE MAIN STRUCTURE BEHIND SUCH PANELS. EMBEDMENT SHALL BE 1 1/2" MINIMUM.
   (B) TO EXISTING CONCRETE BLOCK WALL:
   -1/4" ø TAPCON ANCHORS OR 1/4" ø RAWL ZAMAC NAILIN, AS MANUFACTURED BY I.T.W./RAMSET, OR ELCO INDUSTRIES AND THE RAWL PLUG CO., INC., RESPECTIVELY W/ 3.0" MINIMUM EDGE DISTANCE.
   NOTES:
   B.1) MINIMUM EMBEDMENT OF TAPCON ANCHORS AND RAWL ZAMAC NAILIN, INTO THE CONCRETE BLOCK UNIT SHALL BE 1 1/4".
   B.2) IN CASE THAT PRECAST STONE OR PRECAST CONCRETE PANELS BE FOUND ON THE EXISTING WALL, ANCHORS SHALL BE LONG ENOUGH TO REACH THE MAIN STRUCTURE BEHIND SUCH PANELS. ANCHORAGE SHALL BE 1 1/4" MINIMUM.
   (C) ANCHORS SHALL BE INSTALLED FOLLOWING ALL OF THE RECOMENDATIONS AND SPECIFICATIONS OF THE ANCHOR'S MANUFACTURER.
   (D) ANCHORAGE TO WOOD FRAME BUILDINGS NOT COVERED IN THIS DRAWING SHALL BE ENGINEERED ON A JOB BY JOB BASIS.
7. IT SHALL BE THE RESPONSIBILITY OF THE CONTRACTOR TO VERIFY THE SOUNDNESS OF THE STRUCTURE WHERE SHUTTER IS TO BE ATTACHED TO INSURE PROPER ANCHORAGE.
8. SHUTTER MANUFACTURER'S STAMP SHALL BE PLACED ON THE EXPOSED SURFACE OF THE SIDE RAIL APROXIMATELY 4" ABOVE THE BOTTOM OF SUCH RAIL.
   STAMP SHALL READ AS FOLLOWS:
   ROLL-UP SHUTTER
   ALL BROWARD HURRICANE PANEL, INC.
   FORT LAUDERDALE, FLORIDA.
   MIAMI-DADE COUNTY PRODUCT CONTROL APPROVED.
9. ROLL-UP MECHANISM NOT PART OF THIS APPROVAL.

APPROVED AS COMPLYING WITH THE
SOUTH FLORIDA BUILDING CODE
DATE May 19, 2000
BY
PRODUCT CONTROL DIVISION
BUILDING CODE COMPLIANCE OFFICE
ACCEPTANCE NO. 00-0328.07

00-0328.07

MIAMI-DADE COUNTY

3/20/00

TILTECO INC.
TILLIT TESTING & ENGINEERING COMPANY
6585 N.W. 36th. St., Ste. 217, VIRGINIA GARDENS, Fl. 33166
Phone : (305)871-1530 . Fax : (305)871-1531
WALTER A. TILLIT Jr., P. E.
FLORIDA Lic. # 44167

HURRICANE PROTECTION ASSOCIATION, INC.
MAGNUM FORCE PREMIER FOAM-FILL ROLLUP

ALL BROWARD HURRICANE PANEL, INC.
450 WEST MC NAB ROAD
FORT LAUDERDALE, FLORIDA 33309

REV. No	DESCRIPTION	DATE	REV. No	DESCRIPTION	DATE
1	-	-	3		
2	-	-	4		

SCALE: -
DATE: 7/16/99
DRAWING No: 99 - 227
SHEET 1 OF 11

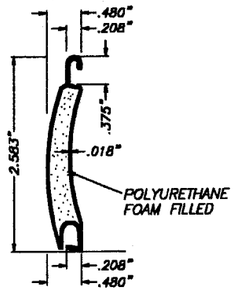

(A) TYPE 1 SLAT:

SHEET METAL ALUMINUM SLAT – FOAM FILLED – SAR/155A
3005–H48 ALUMINUM ALLOY
NOTE: SLATS SHALL BE USED W/ END (NYLON) PLUGS PROVIDED BY A. S. P.
SCALE: 1/2" = 1"

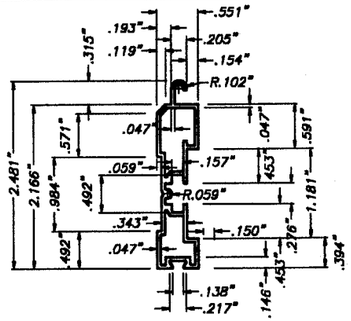

(A1) TYPE 2 SLAT:

EXTRUDED ALUMINUM SLAT – BOTTOM SLAT
6063–T6 ALUMINUM ALLOY
NOTE: SLATS SHALL BE USED W/ END (NYLON) PLUGS PROVIDED BY A. S. P.
SCALE: 1/2" = 1"

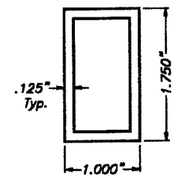

(B) TYPE 1 STORM BAR:

1–3/4" EXTRUDED STORM BAR
6063–T6 ALUMINUM ALLOY
SCALE: 1/2" = 1"

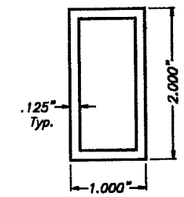

(C) TYPE 2 STORM BAR:

1" x 2" EXTRUDED STORM BAR
6063–T6 ALUMINUM ALLOY
SCALE: 1/2" = 1"

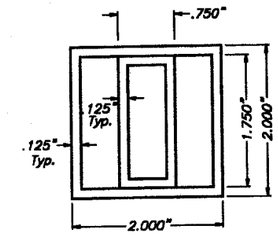

(D) TYPE 3 STORM BAR:

2" x 2" EXTRUDED STORM BAR
6063–T6 ALUMINUM ALLOY
SCALE: 1/2" = 1"

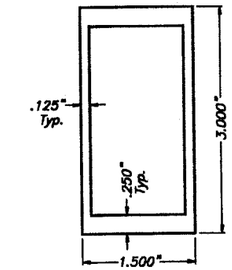

(E) TYPE 4 STORM BAR:

1–1/2" x 3" EXTRUDED STORM BAR
6061–T6 OR 6005–T5 ALUMINUM ALLOY
SCALE: 1/2" = 1"

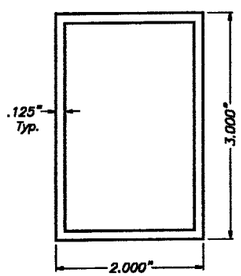

(F) TYPE 5 STORM BAR:

2" x 3" EXTRUDED STORM BAR
6063–T6 ALUMINUM ALLOY
SCALE: 1/2" = 1"

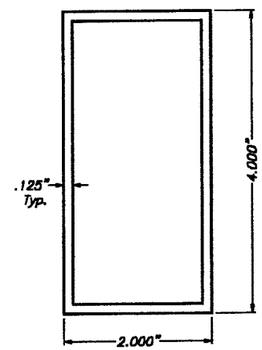

(G) TYPE 6 STORM BAR:

4" EXTRUDED STORM BAR
6063–T6 ALUMINUM ALLOY
SCALE: 1/2" = 1"

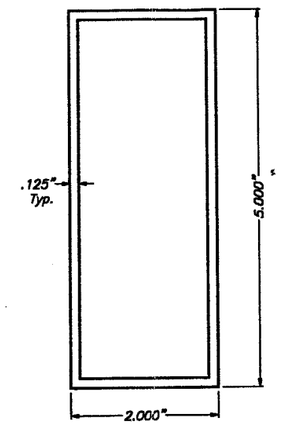

(H) TYPE 7 STORM BAR:

5" EXTRUDED STORM BAR
6063–T6 ALUMINUM ALLOY
SCALE: 1/2" = 1"

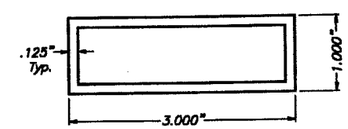

(I) TYPE 1 HEADER:

1" x 3" EXTRUDED HEADER
6063–T6 ALUMINUM ALLOY
SCALE: 1/2" = 1"

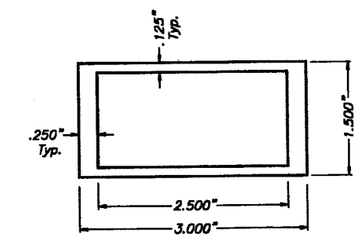

(J) TYPE 2 HEADER:

2" x 3" EXTRUDED HEADER
6061–T6 OR 6005–T5 ALUMINUM ALLOY
SCALE: 1/2" = 1"

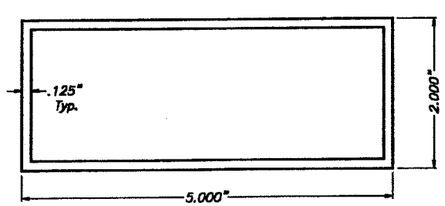

(L) TYPE 3 HEADER:

5" EXTRUDED HEADER
6063–T6 ALUMINUM ALLOY
SCALE: 1/2" = 1"

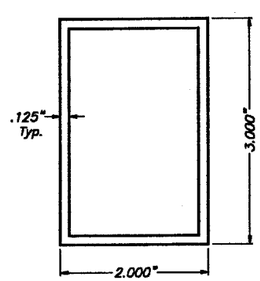

(M) TYPE 1 MULLION:

3" EXTRUDED MULLION
6063–T6 ALUMINUM ALLOY
SCALE: 1/2" = 1"

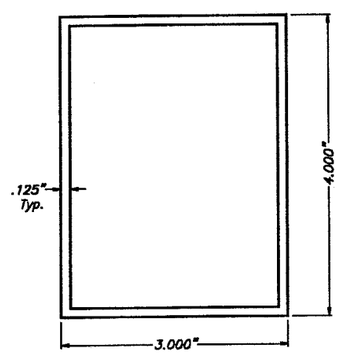

(N) TYPE 2 MULLION:

4" EXTRUDED MULLION
6063–T6 ALUMINUM ALLOY
SCALE: 1/2" = 1"

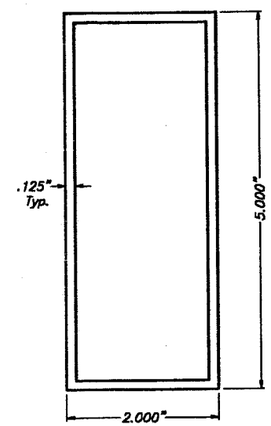

(O) TYPE 3 MULLION:

5" EXTRUDED MULLION
6063–T6 ALUMINUM ALLOY
SCALE: 1/2" = 1"

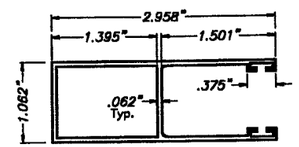

(P) TYPE 1 SIDE RAILS:

6063–T6 Alum. ALLOY
NOTE: SIDE RAIL SHALL BE USED W/ RUBBER GASKETS PROVIDED BY A. S. P.
SCALE: 1/2" = 1"

APPROVED AS COMPLYING WITH THE SOUTH FLORIDA BUILDING CODE
DATE May 19 2000
BY
PRODUCT CONTROL DIVISION
BUILDING CODE COMPLIANCE OFFICE
ACCEPTANCE NO. 00-0328.07

MIAMI–DADE COUNTY

TILTECO INC.
TILLIT TESTING & ENGINEERING COMPANY
6595 N.W. 36th. St., Ste. 217, VIRGINIA GARDENS, Fl. 33166
Phone : (305)871–1530 . Fax : (305)871–1531
WALTER A. TILLIT Jr., P. E.
FLORIDA Lic. # 44167

HURRICANE PROTECTION ASSOCIATION, INC.
MAGNUM FORCE PREMIER FOAM–FILL ROLLUP

ALL BROWARD HURRICANE PANEL, INC.
450 WEST MC NAB ROAD
FORT LAUDERDALE, FLORIDA 33309

REV. No	DESCRIPTION	DATE	REV. No	DESCRIPTION	DATE
1	–	–	3		
2	–	–	4		

– SCALE
7/16/99 DATE
99 – 227 DRAWING No
SHEET 2 OF 11

3/20/00

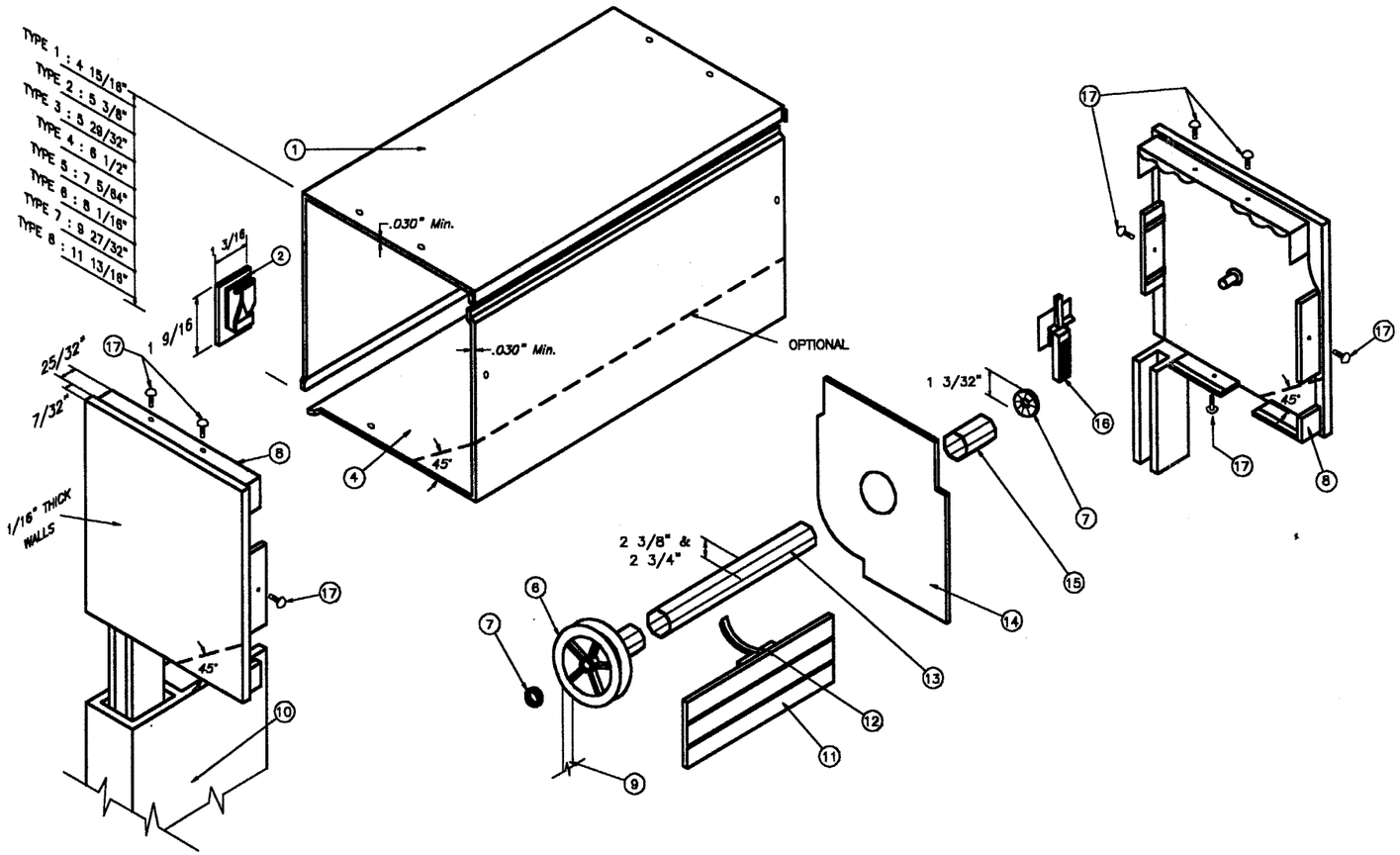

Q BOX COMPONENTS AND ASSEMBLY DETAIL

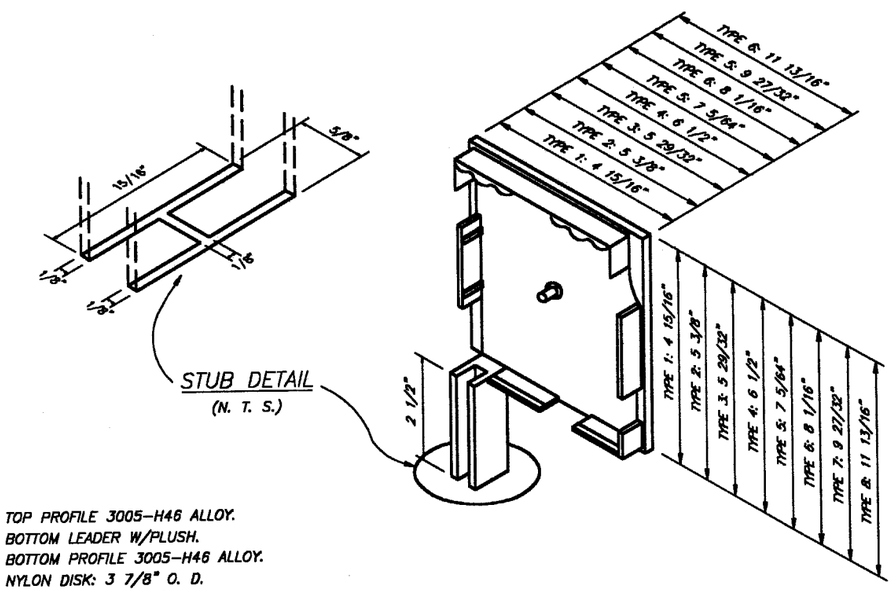

1. TOP PROFILE 3005–H46 ALLOY.
2. BOTTOM LEADER W/PLUSH.
4. BOTTOM PROFILE 3005–H46 ALLOY.
6. NYLON DISK: 3 7/8" O. D.
7. ROLLING CUSHION W/BALLS.
8. BOX SIDE BRACKET: CAST ALUMINUM.
9. RIBBON: 17/32" WIDE.
10. SIDE RAIL.
11. SLAT.
12. EXTRUDED ALUMINUM DRAWING HOOP.
13. GALVANIZED STEEL REEL: 2 3/8" O. D. x .024" Min. Thk. 2 3/4" O. D. x 0.047" Thk.
14. RETAINING METAL PLATE: 26 Ga. Galv. STEEL AT EACH END.
15. NYLON FERRULE: 1 17/32" O. D. x 0.045" Thk. x 4 1/16" Long.
16. NYLON FUNNEL.
17. SCREWS: # 4 x 1/2" S. S.

R BOX SIDE BRACKET TYPES

APPROVED AS COMPLYING WITH THE
SOUTH FLORIDA BUILDING CODE
DATE May 19, 2000
BY
PRODUCT CONTROL DIVISION
BUILDING CODE COMPLIANCE OFFICE
ACCEPTANCE NO. 00-0328.07

MIAMI–DADE COUNTY

3/20/00

TILTECO INC.
TILLIT TESTING & ENGINEERING COMPANY
8595 N.W. 36th. St., Ste. 217, VIRGINIA GARDENS, Fl. 33166
Phone : (305)871–1530 . Fax : (305)871–1531
WALTER A. TILLIT Jr., P. E.
FLORIDA Lic. # 44167

HURRICANE PROTECTION ASSOCIATION, INC.
MAGNUM FORCE PREMIER FOAM–FILL ROLLUP

ALL BROWARD HURRICANE PANEL, INC.
450 WEST MC NAB ROAD
FORT LAUDERDALE, FLORIDA 33309

REV. No	DESCRIPTION	DATE	REV. No	DESCRIPTION	DATE
1	–	–	3		
2	–	–	4		

– SCALE
7/16/99 DATE
99 – 227 DRAWING No
SHEET 3 OF 11

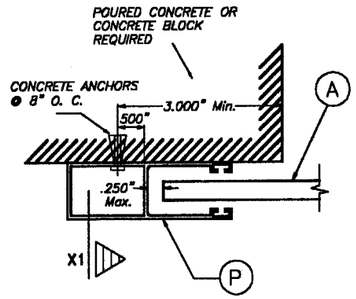

SECTION P – P (1) : WALL MOUNT

SCALE: 3/8" = 1"

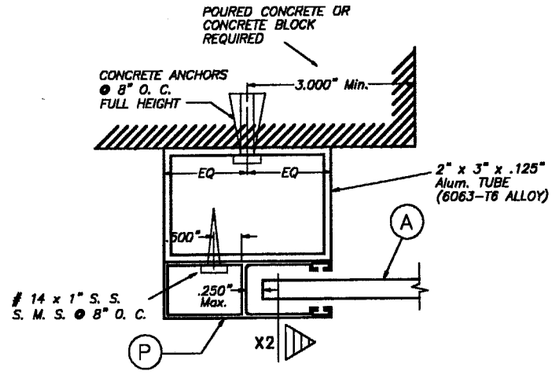

SECTION P – P (2) : BUILD-OUT

SCALE: 3/8" = 1"

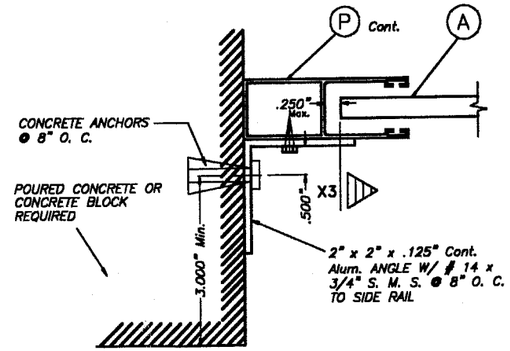

SECTION P – P (3) : SIDE WALL MOUNT

SCALE: 3/8" = 1"

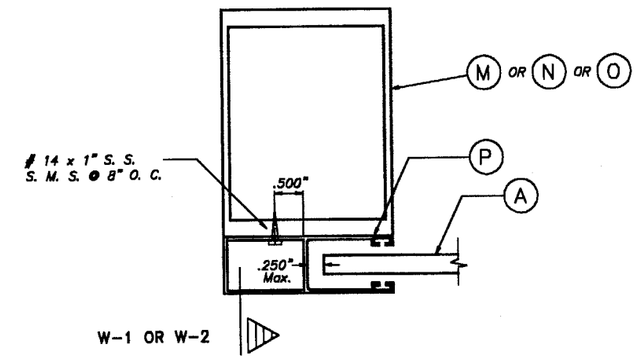

SECTION Q – Q : MULLION MOUNT

SCALE: 3/8" = 1"

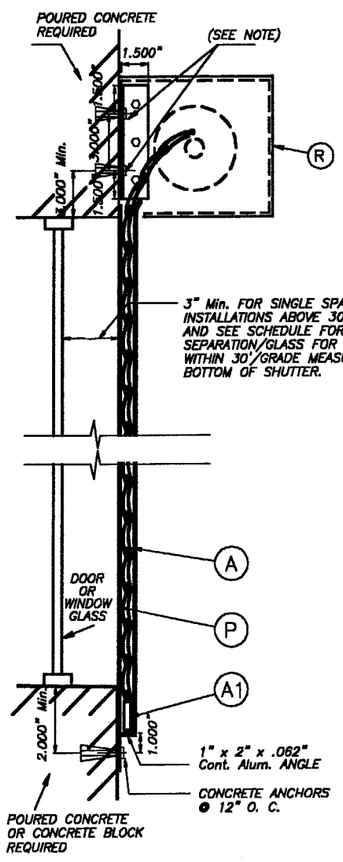

SECTION X – X (1)

N. T. S.

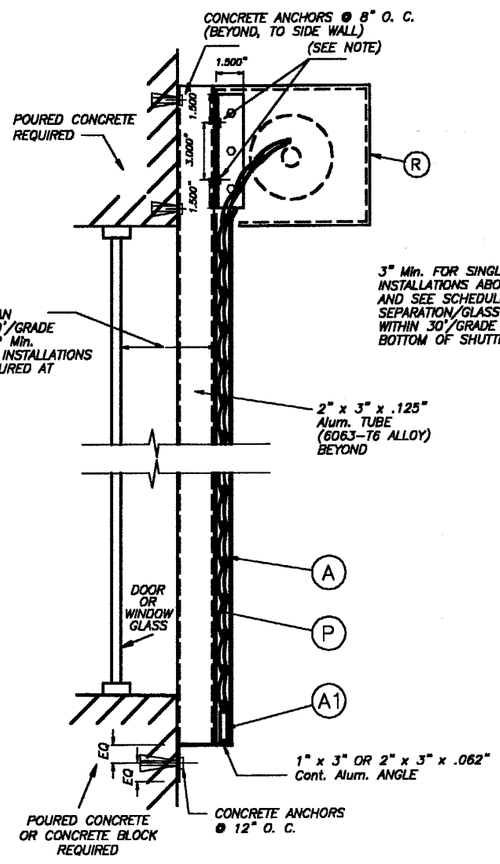

SECTION X – X (2)

N. T. S.

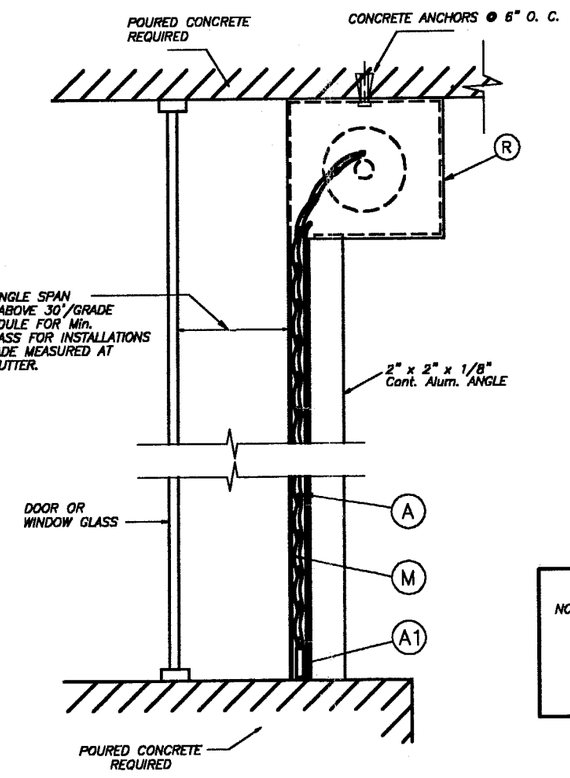

SECTION X –X (3)

N. T. S.

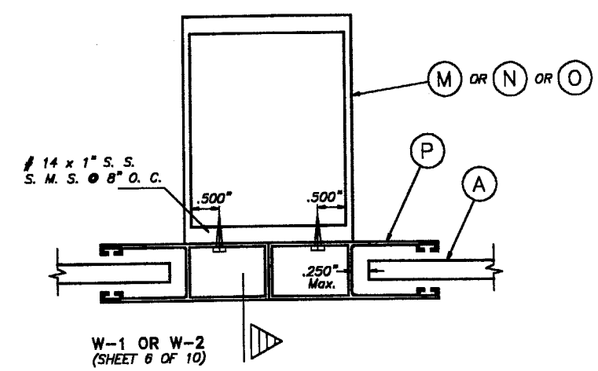

SECTION R – R : MULLION MOUNT

SCALE: 3/8" = 1"

NOTE: 1" x 1 1/2" x 0.125" x 0'-6" ALUMINUM ANGLE W/(2) 1/4" ø x 2" TAPCON OR RAWL ZAMAC NAILIN ANCHORS TO WALL FOR SECTION X–X (1), AND OR (2) # 14 x 3/4" S. S. S. M. S. TO 2" x 3" x .125" Alum. TUBE (FOR SECTION X–X (2)). ATTACH ANGLE TO Ⓡ W/ (3) 3/16" ø S. S. RIVETS.

APPROVED AS COMPLYING WITH THE SOUTH FLORIDA BUILDING CODE
DATE May 19, 2000
BY
PRODUCT CONTROL DIVISION
BUILDING CODE COMPLIANCE OFFICE
ACCEPTANCE NO. 00-0328.07

MIAMI-DADE COUNTY

TILTECO INC.
TILLIT TESTING & ENGINEERING COMPANY
8595 N.W. 36th. St., Ste. 217, VIRGINIA GARDENS, FL 33166
Phone : (305)871-1530 . Fax : (305)871-1531
WALTER A. TILLIT Jr., P. E.
FLORIDA Lic. # 44167

3/20/00

HURRICANE PROTECTION ASSOCIATION, INC.
MAGNUM FORCE PREMIER FOAM-FILL ROLLUP

ALL BROWARD HURRICANE PANEL, INC.
450 WEST MC NAB ROAD
FORT LAUDERDALE, FLORIDA 33309

REV. No	DESCRIPTION	DATE	REV. No	DESCRIPTION	DATE
1	–	–	3		
2	–	–	4		

SCALE: –

DATE: 7/16/99

DRAWING No: 99 – 227

SHEET 4 OF 11

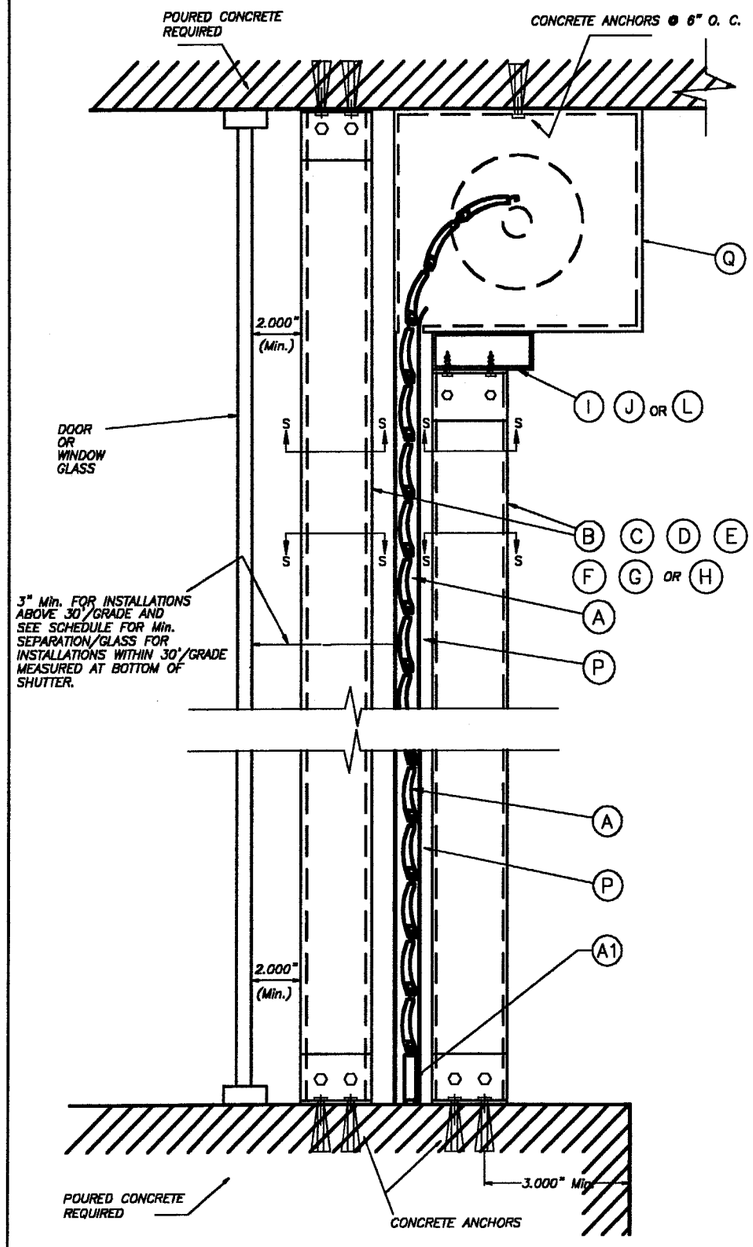

CEILING & FLOOR MOUNTING : SECTION V – V (1)

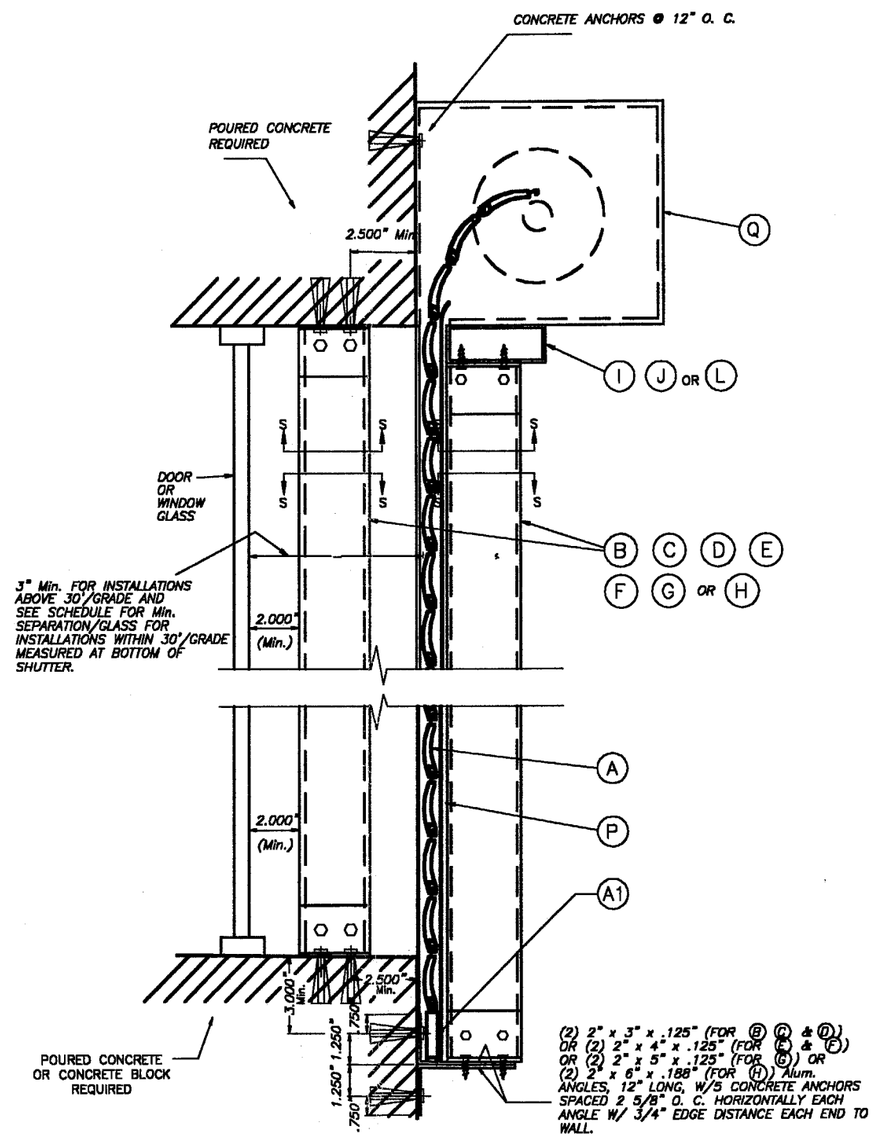

WALL MOUNTING : SECTION V – V (2)

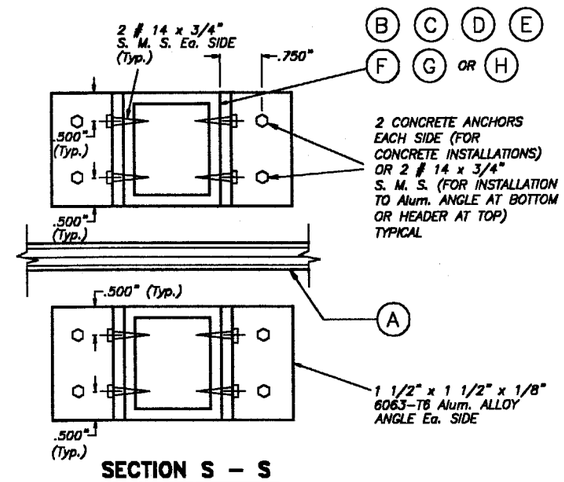

SECTION S – S

APPROVED AS COMPLYING WITH THE SOUTH FLORIDA BUILDING CODE
DATE May 19, 2000
BY
PRODUCT CONTROL DIVISION
BUILDING CODE COMPLIANCE OFFICE
ACCEPTANCE NO. 00-0328.07

MIAMI-DADE COUNTY

3/20/00

TILTECO INC.
TILLIT TESTING & ENGINEERING COMPANY
8595 N.W. 36th. St., Ste. 217, VIRGINIA GARDENS, Fl. 33166
Phone : (305)871-1530 . Fax : (305)871-1531
WALTER A. TILLIT Jr., P. E.
FLORIDA Lic. # 44167

HURRICANE PROTECTION ASSOCIATION, INC.
MAGNUM FORCE PREMIER FOAM-FILL ROLLUP

ALL BROWARD HURRICANE PANEL, INC.
450 WEST MC NAB ROAD
FORT LAUDERDALE, FLORIDA 33309

REV. No	DESCRIPTION	DATE	REV. No	DESCRIPTION	DATE
1	–	–	3		
2	–	–	4		

– SCALE
7/16/99 DATE
99 – 227 DRAWING No
SHEET 5 OF 11

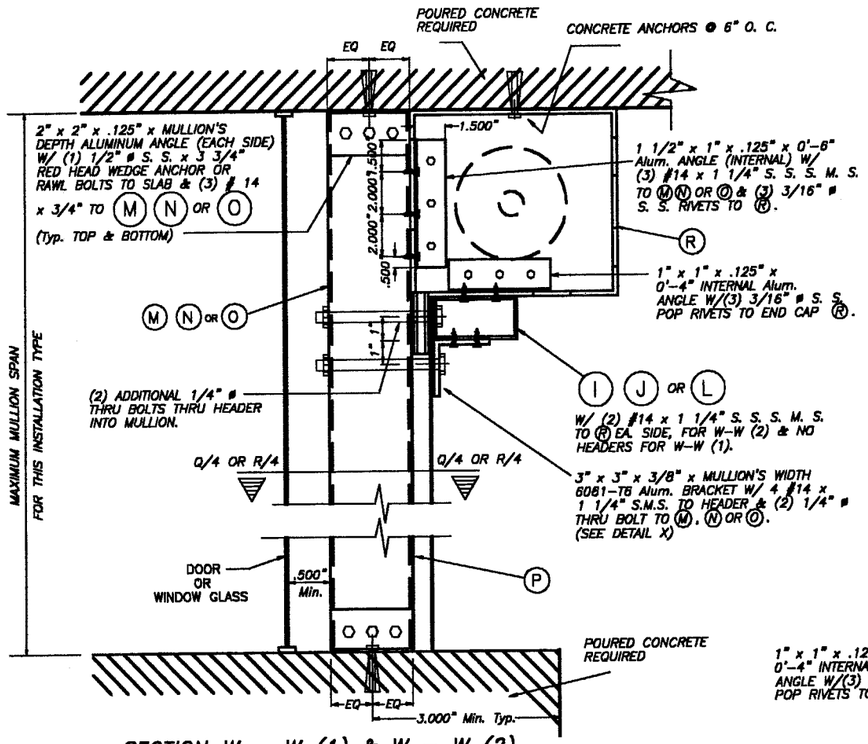

SECTION W – W (1) & W – W (2)

N. T. S.

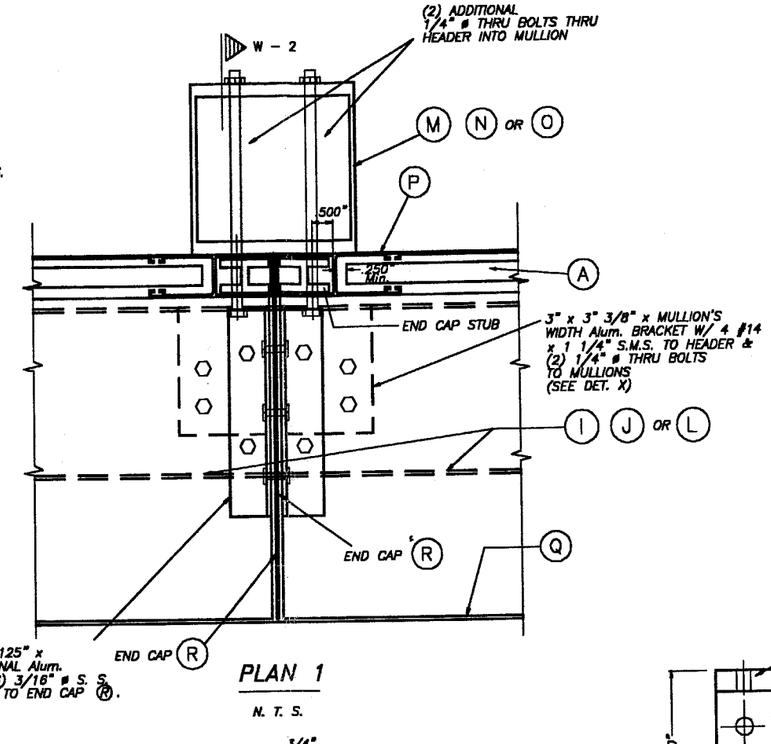

PLAN 1

N. T. S.

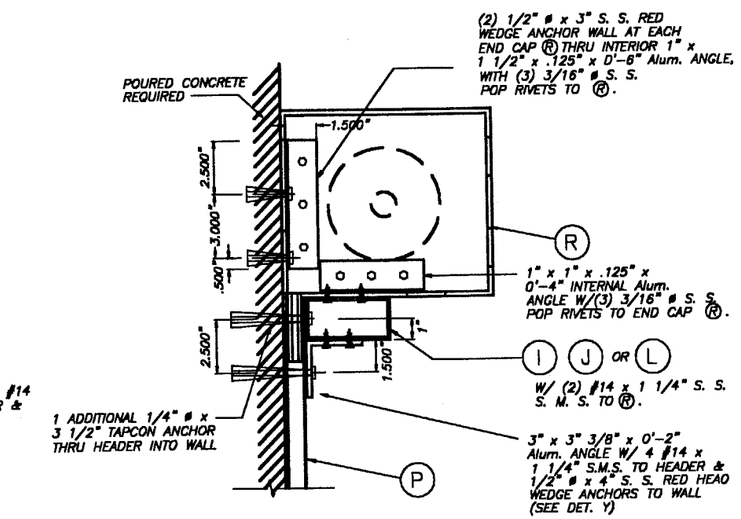

WALL MOUNTING : SECTION W – W (3)

N. T. S.

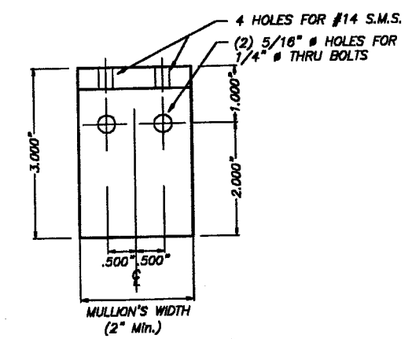

DETAIL X (ELEVATION)

SCALE: 3/8" = 1"

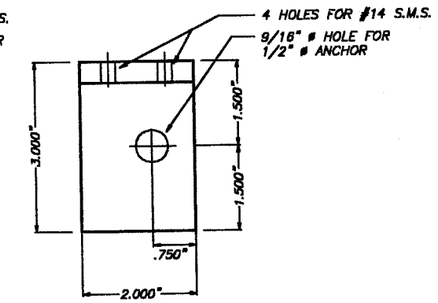

DETAIL Y (ELEVATION)

SCALE: 3/8" = 1"

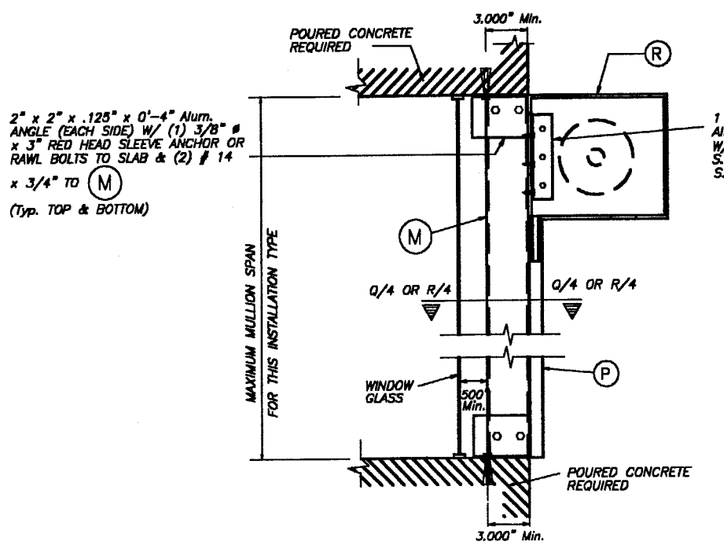

SECTION W – W (1) : VALID ONLY WHEN MULLION (M) IS USED.

N. T. S.

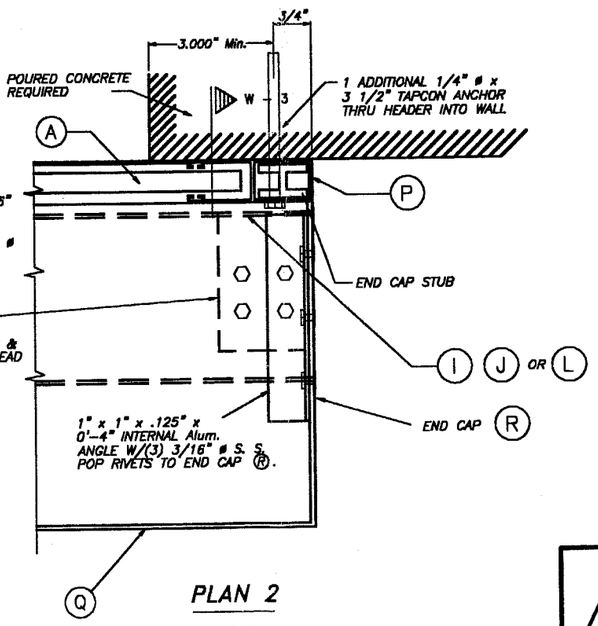

PLAN 2

N. T. S.

APPROVED AS COMPLYING WITH THE SOUTH FLORIDA BUILDING CODE
DATE May 19 2000
BY
PRODUCT CONTROL DIVISION
BUILDING CODE COMPLIANCE OFFICE
ACCEPTANCE NO. 00-0328.07

MIAMI-DADE COUNTY

3/20/00

TILTECO INC.
TILLIT TESTING & ENGINEERING COMPANY
8595 N.W. 36th. St., Ste. 217, VIRGINIA GARDENS, Fl. 33166
Phone : (305)871-1530 . Fax : (305)871-1531
WALTER A. TILLIT Jr., P. E.
FLORIDA Lic. # 44167

HURRICANE PROTECTION ASSOCIATION, INC.
MAGNUM FORCE PREMIER FOAM-FILL ROLLUP

ALL BROWARD HURRICANE PANEL, INC.
450 WEST MC NAB ROAD
FORT LAUDERDALE, FLORIDA 33309

REV. No	DESCRIPTION	DATE	REV. No	DESCRIPTION	DATE
1	–	–	3		
2	–	–	4		

–	SCALE
7/16/99	DATE
99 – 227	DRAWING No
SHEET 6 OF 11	

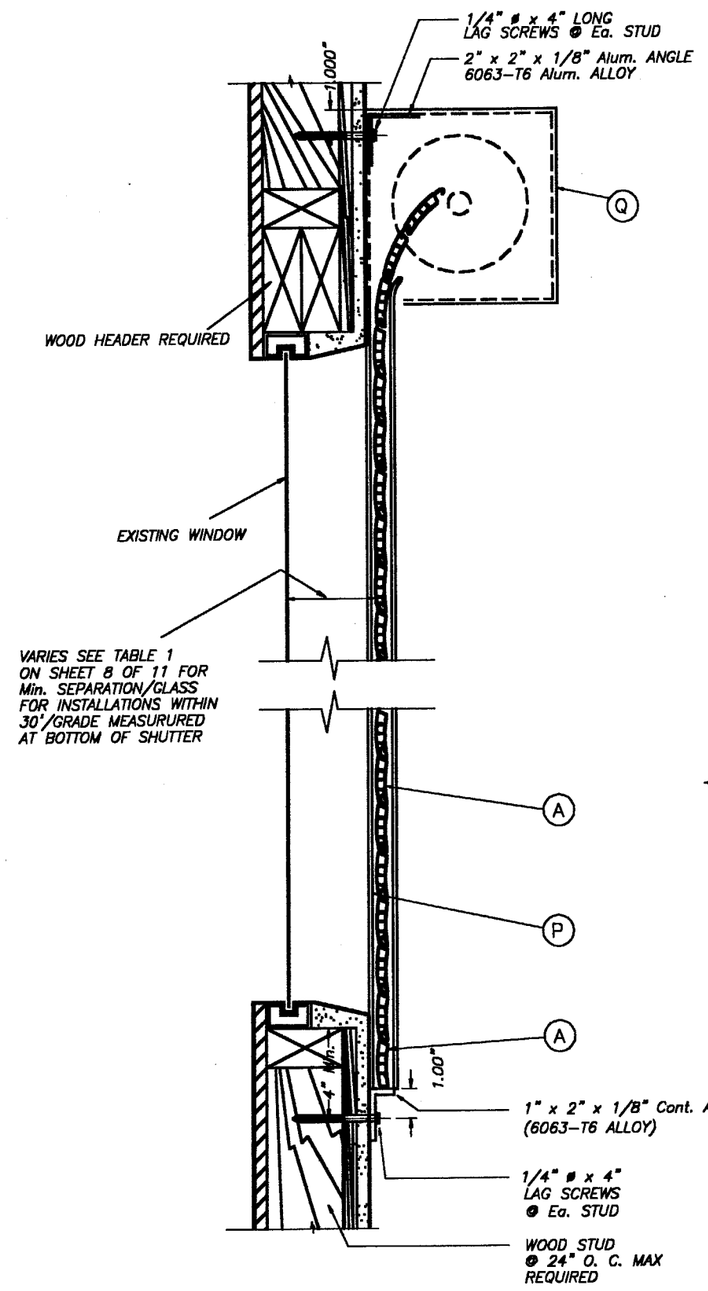

WALL MOUNTING INSTALLATION

SINGLE SPAN CONDITION

N. T. S.

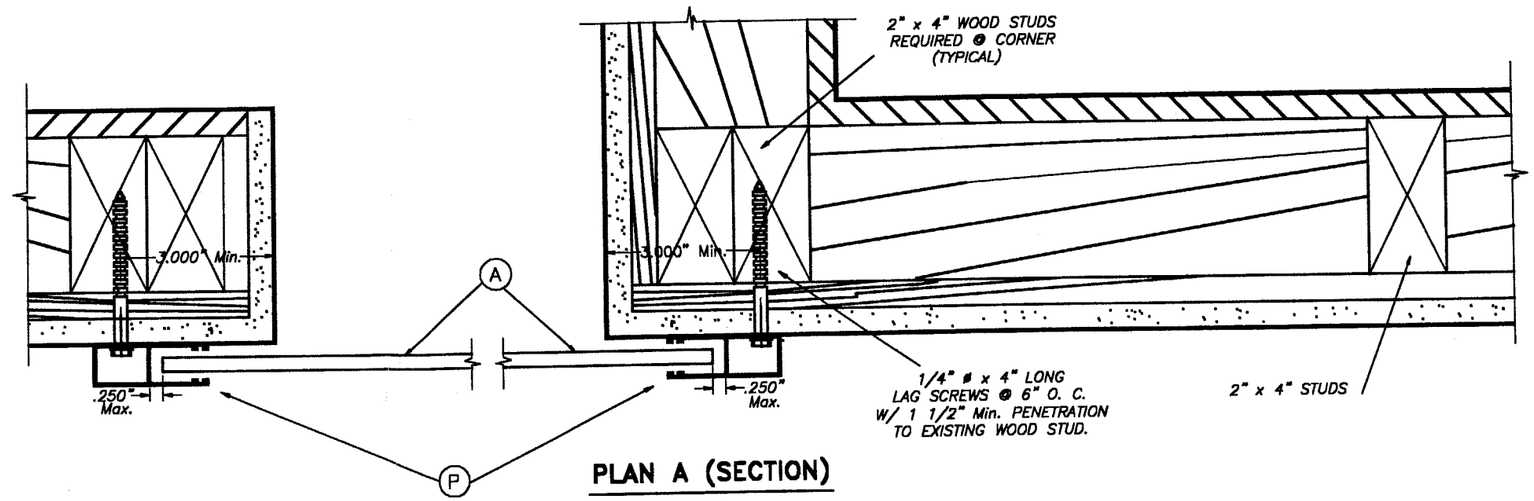

PLAN A (SECTION)

WALL MOUNT

N. T. S.

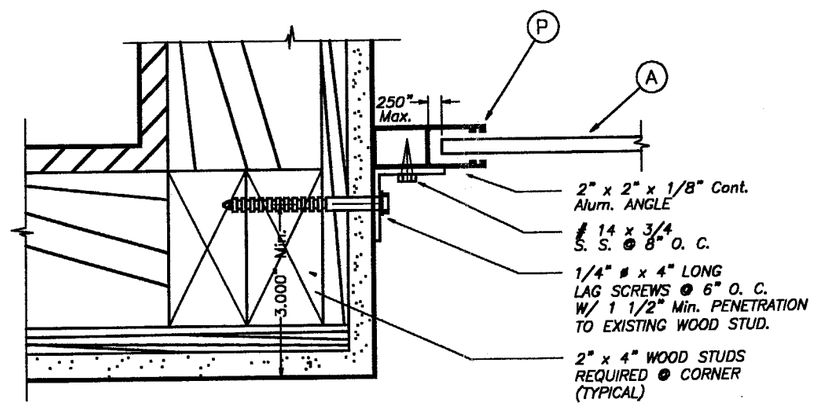

PLAN B (SECTION)

INSIDE MOUNT

N. T. S.

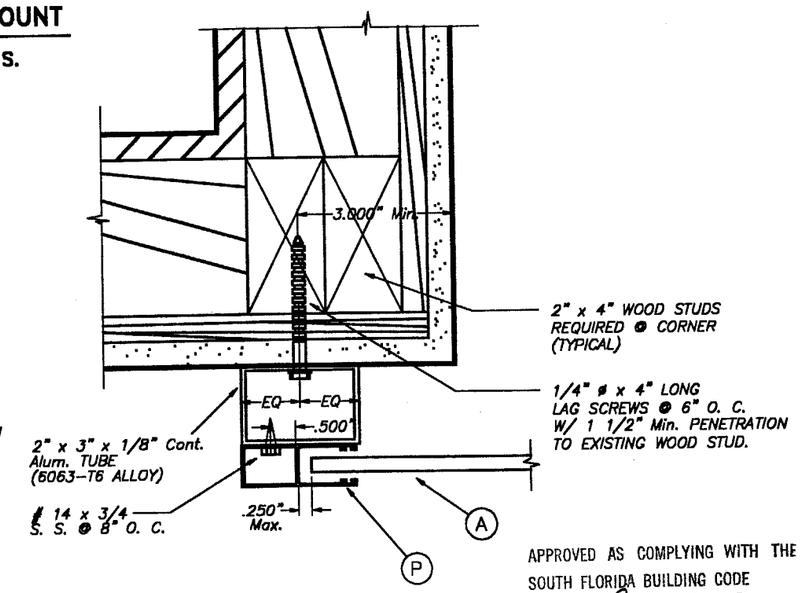

PLAN C

(BUILD-OUT)

N. T. S.

APPROVED AS COMPLYING WITH THE
SOUTH FLORIDA BUILDING CODE
DATE May 19, 2000
BY
PRODUCT CONTROL DIVISION
BUILDING CODE COMPLIANCE OFFICE
ACCEPTANCE NO. 00-0328.07

NOTES:

1. INSTALLATIONS ARE ONLY VALID FOR BUILDINGS WITH MEAN ROOF HEIGHT LESS OR EQUAL THAN 30 FEET.
2. FOR NEW FRAME CONSTRUCTION: WOOD MEMBER TO BE SOUTHERN PINE No. 2 W/ SPECIFIC DENSITY OF 0.55 OR EQUAL.
3. MINIMUM PENETRATION OF LAG SCREWS INTO WOOD MEMBER TO BE 1 1/2".

3/20/00

MIAMI-DADE COUNTY

TILTECO INC.
TILLIT TESTING & ENGINEERING COMPANY
6595 N.W. 36th. St., Ste. 217, VIRGINIA GARDENS, Fl. 33166
Phone : (305)871-1530 . Fax : (305)871-1531
WALTER A. TILLIT Jr., P. E.
FLORIDA Lic. # 44167

HURRICANE PROTECTION ASSOCIATION, INC.
MAGNUM FORCE PREMIER FOAM-FILL ROLLUP

ALL BROWARD HURRICANE PANEL, INC.
450 WEST MC NAB ROAD
FORT LAUDERDALE, FLORIDA 33309

REV. No	DESCRIPTION	DATE	REV. No	DESCRIPTION	DATE
1	–	–	3		
2	–	–	4		

– SCALE
7/16/99 DATE
99 – 227 DRAWING No
SHEET 7 OF 11

SLAT PERFORMANCE CHART
MAXIMUM DESIGN PRESSURE RATING "W" (p. s. f.) AND CORRESPONDING MAXIMUM SLAT SPAN "L" FOR TYPE 1 SLAT
(USE NEGATIVE PRESSURE VALUES AS PER ASCE 7-88)

SLAT TYPE 1 Max. (US 60) DESIGN LOAD "W" (p.s.f.)	MAXIMUM SLAT SPAN		MINIMUM SEPARATION TO GLASS	
	SINGLE & MULTIPLE UNIT *	SINGLE & MULTIPLE UNIT **	SINGLE & MULTIPLE UNIT ***	SINGLE & MULTIPLE UNIT ****
40.0	4'-4"	4'-4"	5 1/2"	3"
42.5	4'-3"	4'-3"	5 1/2"	3"
45.0	4'-2"	4'-2"	4 1/2"	3"
47.5	4'-1"	4'-1"	4 1/2"	3"
50.0	4'-0"	4'-0"	4 1/2"	3"
52.5	3'-11"	3'-11"	4 1/2"	3"
55.0	3'-11"	3'-11"	4 1/2"	3"
57.5	3'-10"	3'-10"	4 1/2"	3"
60.0	3'-9"	3'-9"	4 1/2"	3"
62.5	3'-9"	3'-9"	4 1/2"	3"
65.0	3'-8"	3'-8"	4 1/2"	3"
67.5	3'-8"	3'-8"	4 1/2"	3"
70.0	3'-7"	3'-7"	4 1/2"	3"
72.5	3'-6"	3'-6"	4"	3"
75.0	3'-6"	3'-6"	4"	3"

SLAT TYPE 1 Max. (US 60) DESIGN LOAD "W" (p.s.f.)	MAXIMUM SLAT SPAN		MINIMUM SEPARATION TO GLASS	
	SINGLE & MULTIPLE UNIT *	SINGLE & MULTIPLE UNIT **	SINGLE & MULTIPLE UNIT ***	SINGLE & MULTIPLE UNIT ****
77.5	3'-6"	3'-6"	4"	3"
80.0	3'-5"	3'-5"	4"	3"
82.5	3'-5"	3'-5"	4"	3"
85.0	3'-4"	3'-4"	4"	3"
87.5	3'-4"	3'-4"	4"	3"
90.0	3'-4"	3'-4"	4"	3"
92.5	3'-3"	3'-3"	4"	3"
95.0	3'-3"	3'-3"	4"	3"
97.5	3'-2"	3'-2"	4"	3"
100.0	3'-2"	3'-2"	4"	3"
102.5	3'-2"	3'-2"	4"	3"
105.0	3'-2"	3'-2"	4"	3"
107.5	3'-1"	3'-1"	4"	3"
110.0	3'-1"	3'-1"	4"	3"
112.5	3'-1"	3'-1"	4"	3"

SLAT TYPE 1 Max. (US 60) DESIGN LOAD "W" (p.s.f.)	MAXIMUM SLAT SPAN		MINIMUM SEPARATION TO GLASS	
	SINGLE & MULTIPLE UNIT *	SINGLE & MULTIPLE UNIT **	SINGLE & MULTIPLE UNIT ***	SINGLE & MULTIPLE UNIT ****
115.0	3'-0"	3'-0"	3 3/4"	3"
117.5	3'-0"	3'-0"	3 3/4"	3"
120.0	3'-0"	3'-0"	3 3/4"	3"
122.5	3'-0"	3'-0"	3 3/4"	3"
125.0	2'-11"	2'-11"	3 3/4"	3"
127.5	2'-11"	2'-11"	3 3/4"	3"
130.0	2'-11"	2'-11"	3 3/4"	3"
132.5	2'-10"	2'-10"	3 3/4"	3"
135.0	2'-10"	2'-10"	3 3/4"	3"
137.5	2'-10"	2'-10"	3 3/4"	3"
140.0	2'-9"	2'-9"	3 3/4"	3"
142.5	2'-9"	2'-9"	3 3/4"	3"
145.0	2'-9"	2'-9"	3 3/4"	3"
147.5	2'-8"	2'-8"	3 3/4"	3"
150.0	2'-8"	2'-8"	3 3/4"	3"

* SPANS VALID FOR INSTALLATIONS WITHIN THE FIRST 30'-0" ELEVATION OF BUILDING MEASURED AT BOTTOM OF SHUTTER.

** SPANS VALID FOR INSTALLATIONS LOCATED ABOVE THE FIRST 30'-0" ELEVATION OF BUILDING MEASURED AT BOTTOM OF SHUTTER.

*** MINIMUM SEPARARTION TO GLASS FOR SHUTTERS INSTALLED WITHIN THE FIRST 30'-0" ELEVATION OF BUILDING AND MAXIMUM SPAN. SEE TABLE 1 FOR Min. SEPARATION TO GLASS FOR SPANS LESS THAN Max. ALLOWED.

**** MINIMUM SEPARATION TO GLASS FOR SHUTTERS INSTALLED ABOVE 30'-0" ELEVATION OF BUILDING, MEASURED AT BOTTOM OF SHUTTER.

NOTE: MINIMUM SEPARATION TO GLASS FOR SINGLE AND MULTIPLE UNITS SHALL BE MEASURED FROM SLAT TO GLASS.

NOTE: THIS INSTALLATION CAN BE CONSTRUCTED REVERSED i. e. WITH BOX FACING WINDOW, AND CONVEX SIDE OF SLATS FACING THE EXTERIOR.

APPROVED AS COMPLYING WITH THE
SOUTH FLORIDA BUILDING CODE
DATE May 19, 2000
BY
PRODUCT CONTROL DIVISION
BUILDING CODE COMPLIANCE OFFICE
ACCEPTANCE NO. 00-0328.07

TABLE 1 :

SLAT SPAN (ft)	Min. SEPARATION TO GLASS
> 50" TO 52"	5 1/2"
> 42" TO 50"	4 1/2"
> 36" TO 42"	4"
36" OR LESS	3 3/4"

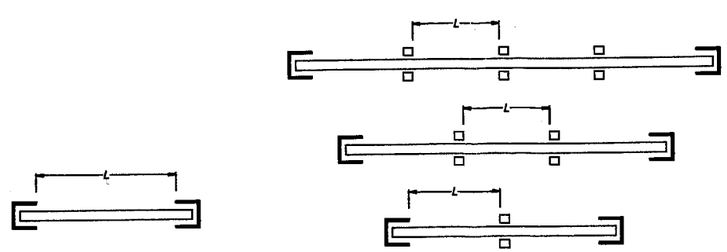

SINGLE SPAN

MULTIPLE SPAN

SPAN LAYOUT

8/10/00

MIAMI-DADE COUNTY

TILTECO INC.
TILLIT TESTING & ENGINEERING COMPANY
8595 N.W. 36th. St., Ste. 217, VIRGINIA GARDENS, FL 33166
Phone : (305)871-1530 . Fax : (305)871-1531
WALTER A. TILLIT Jr., P. E.
FLORIDA Lic. # 44167

HURRICANE PROTECTION ASSOCIATION, INC.
MAGNUM FORCE PREMIER FOAM-FILL ROLLUP

ALL BROWARD HURRICANE PANEL, INC.
450 WEST MC NAB ROAD
FORT LAUDERDALE, FLORIDA 33309

REV. No	DESCRIPTION	DATE	REV. No	DESCRIPTION	DATE
1	–	–	3		
2	–	–	4		

SCALE –
DATE 7/16/99
DRAWING No 99 – 227
SHEET 8 OF 11

STORM BAR LOADING CHART

MAXIMUM DESIGN PRESSURE RATING "W" (p. s. f.) AND CORRESPONDING MAXIMUM SPAN "L" FOR A GIVEN TYPE OF STORM BAR AND STORM BAR SPACING. (USE NEGATIVE PRESSURE VALUES AS PER ASCE 7-88)

MAXIMUM DESIGN LOAD "W" (p.s.f.)	TYPE 1 STORM BAR		TYPE 2 STORM BAR		TYPE 3 STORM BAR		TYPE 4 STORM BAR		TYPE 5 STORM BAR		TYPE 6 STORM BAR		TYPE 7 STORM BAR	
	STORM BAR SPACING *		STORM BAR SPACING *		STORM BAR SPACING *		STORM BAR SPACING *		STORM BAR SPACING *		STORM BAR SPACING *		STORM BAR SPACING *	
	4'-0"	≤ 3'-0"	4'-0"	≤ 3'-0"	4'-0"	≤ 3'-0"	4'-0"	≤ 3'-0"	4'-0"	≤ 3'-0"	4'-0"	≤ 3'-0"	4'-0"	≤ 3'-0"
40.0	4'-8"	5'-5"	5'-2"	5'-10"	6'-9"	7'-3"	7'-11"	7'-11"	7'-11"	7'-11"	9'-0"	9'-0"	10'-0"	10'-0"
42.5	4'-7"	5'-3"	5'-0"	5'-10"	6'-8"	7'-2"	7'-11"	7'-11"	7'-10"	7'-11"	9'-0"	9'-0"	10'-0"	10'-0"
45.0	4'-5"	5'-1"	4'-11"	5'-8"	6'-7"	7'-0"	7'-11"	7'-11"	7'-9"	7'-11"	9'-0"	9'-0"	10'-0"	10'-0"
47.5	4'-4"	5'-0"	4'-9"	5'-6"	6'-6"	6'-11"	7'-11"	7'-11"	7'-8"	7'-11"	9'-0"	9'-0"	10'-0"	10'-0"
50.0	4'-2"	4'-10"	4'-8"	5'-4"	6'-5"	6'-10"	7'-11"	7'-11"	7'-7"	7'-11"	9'-0"	9'-0"	10'-0"	10'-0"
52.5	4'-1"	4'-9"	4'-6"	5'-3"	6'-4"	6'-9"	7'-10"	7'-11"	7'-6"	7'-11"	8'-11"	9'-0"	10'-0"	10'-0"
55.0	4'-0"	4'-7"	4'-5"	5'-1"	6'-3"	6'-8"	7'-9"	7'-11"	7'-5"	7'-11"	8'-10"	9'-0"	10'-0"	10'-0"
57.5	3'-11"	4'-6"	4'-4"	5'-0"	6'-2"	6'-7"	7'-7"	7'-11"	7'-4"	7'-10"	8'-8"	9'-0"	10'-0"	10'-0"
60.0	3'-10"	4'-5"	4'-3"	4'-11"	6'-1"	6'-7"	7'-7"	7'-11"	7'-3"	7'-9"	8'-7"	9'-0"	9'-11"	10'-0"
62.5	3'-9"	4'-4"	4'-2"	4'-9"	6'-0"	6'-6"	7'-6"	7'-11"	7'-2"	7'-8"	8'-6"	9'-0"	9'-10"	10'-0"
65.0	3'-8"	4'-3"	4'-1"	4'-8"	6'-0"	6'-5"	7'-5"	7'-11"	7'-1"	7'-7"	8'-5"	9'-0"	9'-9"	10'-0"
67.5	3'-7"	4'-2"	4'-0"	4'-7"	5'-11"	6'-4"	7'-4"	7'-10"	7'-0"	7'-6"	8'-4"	9'-0"	9'-7"	10'-0"
70.0	3'-7"	4'-1"	3'-11"	4'-6"	5'-10"	6'-4"	7'-3"	7'-10"	6'-11"	7'-6"	8'-3"	8'-11"	9'-6"	10'-0"
72.5	3'-6"	4'-0"	3'-10"	4'-5"	5'-9"	6'-3"	7'-2"	7'-9"	6'-11"	7'-5"	8'-3"	8'-10"	9'-5"	10'-0"
75.0	3'-5"	3'-11"	3'-9"	4'-4"	5'-8"	6'-2"	7'-2"	7'-8"	6'-10"	7'-4"	8'-1"	8'-9"	9'-4"	10'-0"
77.5	3'-4"	3'-11"	3'-9"	4'-4"	5'-7"	6'-2"	7'-1"	7'-7"	6'-9"	7'-3"	8'-0"	8'-8"	9'-4"	10'-0"
80.0	3'-4"	3'-10"	3'-8"	4'-3"	5'-6"	6'-1"	7'-0"	7'-7"	6'-9"	7'-3"	7'-10"	8'-7"	9'-3"	9'-11"
82.5	3'-3"	3'-9"	3'-7"	4'-2"	5'-5"	6'-1"	7'-0"	7'-6"	6'-8"	7'-2"	7'-9"	8'-7"	9'-2"	9'-10"
85.0	3'-3"	3'-9"	3'-7"	4'-1"	5'-4"	6'-0"	6'-11"	7'-5"	6'-7"	7'-1"	7'-7"	8'-6"	9'-0"	9'-9"
87.5	3'-2"	3'-8"	3'-6"	4'-1"	5'-3"	6'-0"	6'-10"	7'-5"	6'-7"	7'-1"	7'-6"	8'-5"	8'-10"	9'-8"
90.0	3'-1"	3'-7"	3'-5"	4'-0"	5'-2"	5'-11"	6'-10"	7'-4"	6'-6"	7'-0"	7'-5"	8'-4"	8'-9"	9'-7"
92.5	3'-1"	3'-7"	3'-5"	3'-11"	5'-1"	5'-11"	6'-9"	7'-3"	6'-6"	7'-0"	7'-4"	8'-4"	8'-8"	9'-7"
95.0	3'-0"	3'-6"	3'-4"	3'-11"	5'-0"	5'-10"	6'-9"	7'-3"	6'-5"	6'-11"	7'-2"	8'-3"	8'-6"	9'-6"
97.5	3'-0"	3'-6"	3'-4"	3'-10"	5'-0"	5'-9"	6'-8"	7'-2"	6'-5"	6'-10"	7'-1"	8'-2"	8'-5"	9'-5"
100.0	3'-0"	3'-5"	3'-3"	3'-9"	4'-11"	5'-8"	6'-8"	7'-2"	6'-4"	6'-10"	7'-0"	8'-1"	8'-4"	9'-4"
102.5	2'-11"	3'-5"	3'-3"	3'-9"	4'-10"	5'-7"	6'-7"	7'-1"	6'-4"	6'-9"	6'-11"	8'-0"	8'-2"	9'-4"
105.0	2'-11"	3'-4"	3'-2"	3'-8"	4'-9"	5'-6"	8'-7"	7'-1"	6'-3"	6'-9"	6'-10"	7'-11"	8'-1"	9'-3"
107.5	2'-10"	3'-4"	3'-2"	3'-8"	4'-9"	5'-6"	6'-6"	7'-0"	6'-3"	6'-8"	6'-9"	7'-10"	8'-0"	9'-2"
110.0	2'-10"	3'-3"	3'-2"	3'-7"	4'-8"	5'-5"	6'-6"	7'-0"	6'-2"	6'-8"	6'-8"	7'-9"	7'-11"	9'-2"
112.5	2'-10"	3'-3"	3'-1"	3'-7"	4'-7"	5'-4"	6'-5"	6'-11"	6'-2"	6'-8"	6'-7"	7'-8"	7'-10"	9'-0"
115.0	2'-9"	3'-2"	3'-1"	3'-6"	4'-7"	5'-3"	6'-5"	6'-11"	6'-2"	6'-7"	6'-7"	7'-7"	7'-9"	8'-11"
117.5	2'-9"	3'-2"	3'-0"	3'-6"	4'-6"	5'-3"	6'-5"	6'-10"	6'-1"	6'-7"	6'-6"	7'-6"	7'-8"	8'-10"
120.0	2'-8"	3'-1"	3'-0"	3'-5"	4'-6"	5'-2"	6'-4"	6'-10"	6'-1"	6'-6"	6'-5"	7'-5"	7'-7"	8'-9"
122.5	2'-8"	3'-1"	3'-0"	3'-5"	4'-5"	5'-1"	6'-4"	6'-9"	6'-0"	6'-6"	6'-4"	7'-4"	7'-6"	8'-8"
125.0	2'-8"	3'-1"	2'-11"	3'-5"	4'-5"	5'-1"	6'-3"	8'-9"	6'-0"	6'-5"	6'-3"	7'-3"	7'-5"	8'-7"
127.5	2'-7"	3'-0"	2'-11"	3'-4"	4'-4"	5'-0"	6'-3"	6'-9"	6'-0"	6'-5"	6'-3"	7'-2"	7'-4"	8'-6"
130.0	2'-7"	3'-0"	2'-11"	3'-4"	4'-4"	5'-0"	6'-3"	6'-8"	5'-11"	6'-5"	6'-2"	7'-1"	7'-3"	8'-5"
132.5	2'-7"	3'-0"	2'-10"	3'-3"	4'-3"	4'-11"	6'-2"	6'-8"	5'-11"	6'-4"	6'-1"	7'-1"	7'-3"	8'-4"
135.0	2'-7"	2'-11"	2'-10"	3'-3"	4'-3"	4'-10"	6'-2"	6'-7"	5'-11"	6'-4"	6'-1"	7'-0"	7'-2"	8'-3"
137.5	2'-6"	2'-11"	2'-10"	3'-3"	4'-2"	4'-10"	6'-2"	6'-7"	5'-10"	6'-4"	6'-0"	6'-11"	7'-1"	8'-2"
140.0	2'-6"	2'-11"	2'-9"	3'-2"	4'-2"	4'-9"	6'-1"	6'-7"	5'-10"	6'-3"	5'-11"	6'-10"	7'-0"	8'-1"
142.5	2'-6"	2'-10"	2'-9"	3'-2"	4'-1"	4'-9"	6'-0"	6'-6"	5'-10"	6'-3"	5'-11"	6'-9"	6'-11"	8'-0"
145.0	2'-6"	2'-10"	2'-9"	3'-2"	4'-1"	4'-8"	6'-0"	6'-6"	5'-9"	6'-3"	5'-10"	6'-9"	6'-11"	8'-0"
147.5	2'-5"	2'-10"	2'-8"	3'-1"	4'-0"	4'-8"	5'-11"	6'-6"	5'-9"	6'-2"	5'-9"	6'-8"	6'-10"	7'-11"
150.0	2'-5"	2'-10"	2'-8"	3'-1"	4'-0"	4'-7"	5'-11"	6'-5"	5'-9"	6'-2"	5'-9"	6'-7"	6'-9"	7'-10"

* STORM BAR SPACING SHALL BE SUCH THAT MAXIMUM SLAT SPAN SHALL NOT BE EXCEEDED.

APPROVED AS COMPLYING WITH THE
SOUTH FLORIDA BUILDING CODE
DATE May 19, 2000
BY
PRODUCT CONTROL DIVISION
BUILDING CODE COMPLIANCE OFFICE
ACCEPTANCE NO. 00-0328.07

3/20/00

MIAMI-DADE COUNTY

TILLECO INC.
TILLIT TESTING & ENGINEERING COMPANY
6595 N.W. 36th. St., Ste. 217, VIRGINIA GARDENS, Fl. 33166
Phone : (305)871-1530 . Fax : (305)871-1531
WALTER A. TILLIT Jr., P. E.
FLORIDA Lic. # 44167

HURRICANE PROTECTION ASSOCIATION, INC.
MAGNUM FORCE PREMIER FOAM-FILL ROLLUP

ALL BROWARD HURRICANE PANEL, INC.
450 WEST MC NAB ROAD
FORT LAUDERDALE, FLORIDA 33309

REV. No	DESCRIPTION	DATE	REV. No	DESCRIPTION	DATE
1	-	-	3		
2	-	-	4		

SCALE: -
DATE: 7/16/99
DRAWING No: 99 - 227
SHEET 9 OF 11

HEADER LOADING CHART

MAXIMUM DESIGN PRESSURE RATING "W" (p. s. f.) AND CORRESPONDING MAXIMUM SPAN "L" (Ft.) FOR A GIVEN TYPE OF HEADER AND STORM BAR HEIGHT (Ft.) (USE NEGATIVE PRESSURE VALUES AS PER ASCE 7-88)

MAXIMUM DESIGN LOAD "W" (p.s.f)	TYPE 1 HEADER		TYPE 2 HEADER		TYPE 3 HEADER		
	STORM BAR HEIGHT		STORM BAR HEIGHT		STORM BAR HEIGHT		
	≤ 5'-0"	> 5' TO 8'	≤ 5'-0"	> 5' TO 8'	≤ 5'-0"	> 5' TO 8'	> 8' TO 10'
40.0	9'-2"	7'-3"	11'-10"	10'-6"	15'-6"	13'-2"	11'-9"
42.5	8'-10"	7'-0"	11'-8"	10'-4"	15'-3"	12'-9"	11'-5"
45.0	8'-7"	6'-10"	11'-6"	10'-2"	15'-1"	12'-5"	11'-1"
47.5	8'-5"	6'-8"	11'-4"	10'-1"	14'-10"	12'-1"	10'-9"
50.0	8'-2"	6'-6"	11'-2"	9'-11"	14'-8"	11'-9"	10'-6"
52.5	8'-0"	6'-4"	11'-0"	9'-10"	14'-6"	11'-6"	10'-3"
55.0	7'-9"	6'-2"	10'-11"	9'-8"	14'-2"	11'-3"	10'-0"
57.5	7'-7"	6'-0"	10'-9"	9'-7"	13'-10"	11'-0"	9'-10"
60.0	7'-5"	5'-11"	10'-8"	9'-6"	13'-7"	10'-9"	9'-7"
62.5	7'-4"	5'-9"	10'-7"	9'-4"	13'-4"	10'-6"	9'-5"
65.0	7'-2"	5'-8"	10'-5"	9'-2"	13'-0"	10'-4"	9'-3"
67.5	7'-0"	5'-7"	10'-4"	9'-0"	12'-10"	10'-1"	9'-1"
70.0	6'-11"	5'-6"	10'-3"	8'-10"	12'-7"	9'-11"	8'-11"
72.5	6'-9"	5'-4"	10'-2"	8'-8"	12'-4"	9'-9"	8'-9"
75.0	6'-8"	5'-3"	10'-1"	8'-6"	12'-2"	9'-7"	8'-7"
77.5	6'-7"	5'-2"	10'-0"	8'-4"	11'-11"	9'-5"	8'-5"
80.0	6'-6"	5'-1"	9'-11"	8'-3"	11'-9"	9'-4"	8'-4"
82.5	6'-4"	5'-0"	9'-10"	8'-1"	11'-7"	9'-2"	8'-2"
85.5	6'-3"	4'-11"	9'-9"	8'-0"	11'-5"	9'-0"	8'-1"
87.5	6'-2"	4'-11"	9'-8"	7'-11"	11'-3"	8'-11"	7'-11"
90.0	6'-1"	4'-10"	9'-8"	7'-9"	11'-1"	8'-9"	7'-10"
92.5	6'-0"	4'-9"	9'-7"	7'-8"	10'-11"	8'-8"	7'-9"
95.0	5'-11"	4'-8"	9'-6"	7'-7"	10'-9"	8'-6"	7'-8"
97.5	5'-10"	4'-8"	9'-5"	7'-6"	10'-8"	8'-5"	7'-6"
100.0	5'-9"	4'-7"	9'-4"	7'-4"	10'-6"	8'-4"	7'-5"
102.5	5'-8"	4'-6"	9'-3"	7'-3"	10'-5"	8'-3"	7'-4"
105.0	5'-8"	4'-5"	9'-1"	7'-2"	10'-3"	8'-1"	7'-3"
107.5	5'-7"	4'-5"	9'-0"	7'-1"	10'-2"	8'-0"	7'-2"
110.0	5'-6"	4'-4"	8'-11"	7'-0"	10'-0"	7'-11"	7'-1"
112.5	5'-5"	4'-4"	8'-9"	6'-11"	9'-11"	7'-10"	7'-0"
115.0	5'-5"	4'-3"	8'-8"	6'-10"	9'-10"	7'-9"	6'-11"
117.5	5'-4"	4'-3"	8'-7"	6'-10"	9'-8"	7'-8"	6'-10"
120.0	5'-3"	4'-2"	8'-6"	6'-9"	9'-7"	7'-7"	6'-9"
122.5	5'-3"	4'-2"	8'-5"	6'-8"	9'-6"	7'-6"	6'-9"
125.0	5'-2"	4'-1"	8'-4"	6'-7"	9'-5"	7'-5"	6'-8"
127.5	5'-1"	4'-1"	8'-3"	6'-6"	9'-4"	7'-4"	6'-7"
130.0	5'-1"	4'-0"	8'-2"	6'-6"	9'-3"	7'-3"	6'-6"
132.5	5'-0"	4'-0"	8'-1"	6'-5"	9'-2"	7'-3"	6'-6"
135.0	5'-0"	3'-11"	8'-0"	6'-4"	9'-1"	7'-2"	6'-5"
137.5	4'-11"	3'-11"	7'-11"	6'-3"	9'-0"	7'-1"	6'-4"
140.0	4'-11"	3'-10"	7'-11"	6'-3"	8'-11"	7'-0"	6'-3"
142.5	4'-10"	3'-10"	7'-10"	6'-2"	8'-10"	7'-0"	6'-3"
145.0	4'-10"	3'-10"	7'-9"	6'-1"	8'-9"	6'-11"	6'-2"
147.5	4'-9"	3'-9"	7'-8"	6'-1"	8'-8"	6'-10"	6'-1"
150.0	4'-9"	3'-9"	7'-7"	6'-0"	8'-7"	6'-9"	6'-1"

APPROVED AS COMPLYING WITH THE
SOUTH FLORIDA BUILDING CODE
DATE May 17, 2000
BY
PRODUCT CONTROL DIVISION
BUILDING CODE COMPLIANCE OFFICE
ACCEPTANCE NO. 00-0328.07

MAXIMUM NEGATIVE DESIGN PRESSURE RATING "W" (p. s. f.) AND CORRESPONDING MAXIMUM ANCHOR SPACING (in.) SCHEDULE

MAXIMUM DESIGN LOAD "W" (p.s.f.)	TO CONCRETE WALL	TO MASONRY WALL
FROM 40.0 TO 150.0	8" O. C.	8" O. C.

2000
3/20/00

MIAMI-DADE COUNTY

TILTECO INC.
TILLIT TESTING & ENGINEERING COMPANY
8595 N.W. 36th. St., Ste. 217, VIRGINIA GARDENS, Fl. 33166
Phone : (305)871-1530 . Fax : (305)871-1531
WALTER A. TILLIT Jr., P. E.
FLORIDA Lic. # 44167

HURRICANE PROTECTION ASSOCIATION, INC.
MAGNUM FORCE PREMIER FOAM-FILL ROLLUP

ALL BROWARD HURRICANE PANEL, INC.
450 WEST MC NAB ROAD
FORT LAUDERDALE, FLORIDA 33309

REV. No	DESCRIPTION	DATE	REV. No	DESCRIPTION	DATE
1	–	–	3		
2	–	–	4		

SCALE –
DATE 7/16/99
DRAWING No 99 – 227
SHEET 10 OF 11

MULLION LOADING CHART

MAXIMUM DESIGN PRESSURE RATING "W" (p. s. f.) AND CORRESPONDING MAXIMUM SPAN "L" (Ft.) FOR A GIVEN TYPE OF MULLION AND MULLION SPACING.

(USE NEGATIVE PRESSURE VALUES AS PER ASCE 7-88)

MAXIMUM DESIGN LOAD "W" (p.s.f.)	TYPE 1 MULLION 3" EXTRUDED MULLION			TYPE 2 MULLION 4" EXTRUDED MULLION				TYPE 3 MULLION 5" EXTRUDED MULLION			
	MULLION SPACING			MULLION SPACING				MULLION SPACING			
	3' OR LESS	> 3' TO 4'	> 4' TO 5'	3' OR LESS	> 3' TO 4'	> 4' TO 5'	> 5' TO 8'	3' OR LESS	> 3' TO 4'	> 4' TO 5'	> 5' TO 8'
40.0	7'-3"	6'-7"	6'-1"	9'-11"	9'-0"	9'-7"	8'-2"	10'-11"	9'-11"	10'-7"	9'-0"
42.5	7'-1"	6'-5"	6'-0"	9'-8"	8'-11"	9'-5"	8'-0"	10'-8"	9'-8"	10'-4"	8'-10"
45.0	7'-0"	6'-4"	5'-11"	9'-6"	8'-9"	9'-3"	7'-11"	10'-6"	9'-6"	10'-2"	8'-8"
47.5	6'-10"	6'-3"	5'-9"	9'-4"	8'-8"	9'-1"	7'-9"	10'-3"	9'-4"	10'-0"	8'-8"
50.0	6'-9"	6'-1"	5'-8"	9'-2"	8'-6"	8'-11"	7'-7"	10'-1"	9'-2"	9'-9"	8'-4"
52.5	6'-7"	6'-0"	5'-7"	9'-1"	8'-4"	8'-9"	7'-6"	9'-11"	9'-0"	9'-8"	8'-3"
55.0	6'-6"	5'-11"	5'-6"	8'-11"	8'-3"	8'-7"	7'-4"	9'-10"	8'-11"	9'-6"	8'-1"
57.5	6'-5"	5'-10"	5'-5"	8'-9"	8'-1"	8'-6"	7'-3"	9'-8"	8'-9"	9'-4"	8'-0"
60.0	6'-4"	5'-9"	5'-4"	8'-8"	8'-0"	8'-5"	7'-2"	9'-6"	8'-8"	9'-3"	7'-11"
62.5	6'-3"	5'-8"	5'-3"	8'-6"	7'-11"	8'-3"	7'-1"	9'-5"	8'-6"	9'-1"	7'-9"
65.0	6'-2"	5'-7"	5'-3"	8'-5"	7'-9"	8'-2"	7'-0"	9'-3"	8'-5"	9'-0"	7'-8"
67.5	6'-1"	5'-7"	5'-2"	8'-4"	7'-8"	8'-1"	6'-11"	9'-2"	8'-4"	8'-10"	7'-7"
70.0	6'-0"	5'-6"	5'-1"	8'-3"	7'-7"	7'-11"	6'-10"	9'-0"	8'-3"	8'-9"	7'-8"
72.5	5'-11"	5'-5"	5'-0"	8'-1"	7'-6"	7'-10"	6'-9"	8'-11"	8'-1"	8'-8"	7'-5"
75.0	5'-11"	5'-4"	5'-0"	8'-0"	7'-5"	7'-9"	6'-8"	8'-10"	8'-0"	8'-7"	7'-4"
77.5	5'-10"	5'-4"	4'-11"	7'-11"	7'-4"	7'-8"	6'-7"	8'-9"	7'-11"	8'-6"	7'-3"
80.0	5'-9"	5'-3"	4'-10"	7'-10"	7'-3"	7'-7"	6'-6"	8'-8"	7'-10"	8'-4"	7'-2"
82.5	5'-8"	5'-2"	4'-10"	7'-9"	7'-2"	7'-6"	6'-5"	8'-7"	7'-9"	8'-3"	7'-1"
85.0	5'-8"	5'-2"	4'-9"	7'-8"	7'-1"	7'-6"	6'-5"	8'-6"	7'-8"	8'-2"	7'-0"
87.5	5'-7"	5'-1"	4'-9"	7'-8"	7'-1"	7'-5"	6'-4"	8'-5"	7'-7"	8'-2"	6'-11"
90.0	5'-7"	5'-0"	4'-8"	7'-7"	7'-0"	7'-4"	6'-3"	8'-4"	7'-7"	8'-1"	6'-11"
92.5	5'-6"	5'-0"	4'-8"	7'-8"	6'-11"	7'-3"	6'-2"	8'-3"	7'-6"	8'-0"	6'-10"
95.0	5'-5"	4'-11"	4'-7"	7'-5"	6'-10"	7'-2"	6'-2"	8'-2"	7'-5"	7'-11"	6'-9"

MAXIMUM DESIGN LOAD "W" (p.s.f.)	TYPE 1 MULLION 3" EXTRUDED MULLION			TYPE 2 MULLION 4" EXTRUDED MULLION				TYPE 3 MULLION 5" EXTRUDED MULLION			
	MULLION SPACING			MULLION SPACING				MULLION SPACING			
	3' OR LESS	> 3' TO 4'	> 4' TO 5'	3' OR LESS	> 3' TO 4'	> 4' TO 5'	> 5' TO 8'	3' OR LESS	> 3' TO 4'	> 4' TO 5'	> 5' TO 8'
97.5	5'-5"	4'-11"	4'-7"	7'-4"	6'-10"	7'-2"	6'-1"	8'-1"	7'-4"	7'-10"	6'-8"
100.0	5'-4"	4'-10"	4'-6"	7'-4"	6'-9"	7'-1"	6'-1"	8'-0"	7'-4"	7'-9"	6'-8"
102.5	5'-4"	4'-10"	4'-6"	7'-3"	6'-8"	7'-0"	6'-0"	8'-0"	7'-3"	7'-9"	6'-7"
105.0	5'-3"	4'-9"	4'-5"	7'-2"	6'-8"	6'-11"	5'-11"	7'-11"	7'-2"	7'-8"	6'-6"
107.5	5'-3"	4'-9"	4'-5"	7'-1"	6'-7"	6'-11"	5'-11"	7'-10"	7'-1"	7'-7"	6'-6"
110.0	5'-2"	4'-9"	4'-5"	7'-1"	6'-6"	6'-10"	5'-10"	7'-9"	7'-1"	7'-6"	6'-5"
112.5	5'-2"	4'-8"	4'-4"	7'-0"	6'-6"	6'-10"	5'-10"	7'-9"	7'-0"	7'-6"	6'-5"
115.0	5'-1"	4'-8"	4'-4"	7'-0"	6'-5"	6'-9"	5'-9"	7'-8"	7'-0"	7'-5"	6'-4"
117.5	5'-1"	4'-7"	4'-3"	6'-11"	6'-5"	6'-8"	5'-9"	7'-7"	6'-11"	7'-4"	6'-4"
120.0	5'-0"	4'-7"	4'-3"	6'-10"	6'-4"	6'-8"	5'-8"	7'-7"	6'-10"	7'-4"	6'-3"
122.5	5'-0"	4'-7"	4'-3"	6'-10"	6'-4"	6'-7"	5'-8"	7'-6"	6'-10"	7'-3"	6'-3"
125.0	5'-0"	4'-6"	4'-2"	6'-9"	6'-3"	6'-7"	5'-7"	7'-5"	6'-9"	7'-3"	6'-2"
127.5	4'-11"	4'-6"	4'-2"	6'-9"	6'-3"	6'-6"	5'-7"	7'-5"	6'-9"	7'-2"	6'-2"
130.0	4'-11"	4'-6"	4'-2"	6'-8"	6'-2"	6'-6"	5'-6"	7'-4"	6'-8"	7'-1"	6'-1"
132.5	4'-11"	4'-5"	4'-1"	6'-8"	6'-2"	6'-5"	5'-6"	7'-4"	6'-8"	7'-1"	6'-1"
135.0	4'-10"	4'-5"	4'-1"	6'-7"	6'-1"	6'-5"	5'-6"	7'-3"	6'-7"	7'-0"	6'-0"
137.5	4'-10"	4'-5"	4'-1"	6'-7"	6'-1"	6'-4"	5'-5"	7'-3"	6'-7"	7'-0"	6'-0"
140.0	4'-9"	4'-4"	4'-1"	6'-6"	6'-0"	6'-4"	5'-5"	7'-2"	6'-6"	6'-11"	5'-11"
142.5	4'-9"	4'-4"	4'-0"	6'-6"	6'-0"	6'-3"	5'-4"	7'-2"	6'-6"	6'-11"	5'-11"
145.0	4'-9"	4'-4"	4'-0"	6'-5"	6'-0"	6'-3"	5'-4"	7'-1"	6'-5"	6'-10"	5'-10"
147.5	4'-9"	4'-3"	4'-0"	6'-5"	5'-11"	6'-3"	5'-4"	7'-1"	6'-5"	6'-10"	5'-10"
150.0	4'-8"	4'-3"	3'-11"	6'-4"	5'-11"	6'-2"	5'-3"	7'-0"	6'-4"	6'-9"	5'-10"

NOTES : REFER TO ELEVATIONS ON SHEET 1 OF 11

1-. FOR MULLIONS INSTALLED W/O STORM BARS
A) MULLION SPACING SHALL BE SUCH THAT MAXIMUM SLAT SPAN SHALL NOT BE EXCEEDED

2-. FOR MULLIONS INSTALLED W/ STORM BARS & HEADERS
A) MULLION SPACING SHALL BE SUCH THAT MAXIMUM HEADER SPAN SHALL NOT BE EXCEEDED
B) STORM BAR SPACING SHALL BE SUCH THAT MAXIMUM SLAT SPAN SHALL NOT BE EXCEEDED

APPROVED AS COMPLYING WITH THE SOUTH FLORIDA BUILDING CODE
DATE May 19, 2000
BY
PRODUCT CONTROL DIVISION
BUILDING CODE COMPLIANCE OFFICE
ACCEPTANCE NO. 00-0328.07

MIAMI-DADE COUNTY

8/10/00

TILTECO INC.
TILLIT TESTING & ENGINEERING COMPANY
8595 N.W. 36th. St., Ste. 217, VIRGINIA GARDENS, Fl. 33166
Phone : (305)871-1530 . Fax : (305)871-1531
WALTER A. TILLIT Jr., P. E.
FLORIDA Lic. # 44167

HURRICANE PROTECTION ASSOCIATION, INC.
MAGNUM FORCE PREMIER FOAM-FILL ROLLUP

ALL BROWARD HURRICANE PANEL, INC.
450 WEST MC NAB ROAD
FORT LAUDERDALE, FLORIDA 33309

REV. No	DESCRIPTION	DATE	REV. No	DESCRIPTION	DATE
1	-	-	3		
2	-	-	4		

SCALE: -
DATE: 7/16/99
DRAWING No: 99 - 227
SHEET 11 OF 11