MIAMI-DADE COUNTY, FLORIDA
METRO-DADE FLAGLER BUILDING

BUILDING CODE COMPLIANCE OFFICE
METRO-DADE FLAGLER BUILDING
140 WEST FLAGLER STREET, SUITE 1603
MIAMI, FLORIDA 33130-1563
(305) 375-2901 FAX (305) 375-2908

CONTRACTOR LICENSING SECTION
(305) 375-2527 FAX (305) 375-2558

CONTRACTOR ENFORCEMENT SECTION
(305) 375-2966 FAX (305) 375-2908

PRODUCT CONTROL DIVISION
(305) 375-2902 FAX (305) 372-6339

PRODUCT CONTROL NOTICE OF ACCEPTANCE

Crittall Windows Ltd. dba The F0x Steel Co.
Springwood Drive, Braintree
Essex UK CM7 2YN

Your application for Product Approval of:
"Corporate 2000" Steel Fixed Window - Impact
under Chapter 8 of the Code of Miami-Dade County governing the use of Alternate Materials and Types of Construction, and completely described herein, has been recommended for acceptance by the Miami-Dade County Building Code Compliance Office (BCCO) under the conditions specified herein.

This approval shall not be valid after the expiration date stated below. BCCO reserves the right to secure this product or material at anytime from a jobsite or manufacturer's plant for quality control testing.
If this product or material fails to perform in the approved manner, BCCO may revoke, modify, or suspend the use of such product or material immediately. BCCO reserves the right to revoke this approval, if it is determined BCCO that this product or material fails to meet the requirements of the South Florida Building Code.

The expense of such testing will be incurred by the manufacturer.

Acceptance No.: 00-0403.06

Expires: 05/19/2003

Raul Rodriguez
Chief Product Control Division

THIS IS THE COVERSHEET, SEE ADDITIONAL PAGES FOR SPECIFIC AND GENERAL CONDITIONS

BUILDING CODE & PRODUCT REVIEW COMMITTEE

This application for Product Approval has been reviewed by the BCCO and approved by the Building Code and Product Review Committee to be used in Dade County, Florida under the conditions set forth above.

Francisco J. Quintana, R.A.
Director
Miami-Dade County
Building Code Compliance Office

Approved: 05/19/2000

Internet mail address: postmaster@buildingcodeonline.com **Homepage: http://www.buildingcodeonline.com**

Crittall Windows Ltd.

ACCEPTANCE No.: 00-0403.06

APPROVED : MAY 1 9 2000

EXPIRES : MAY 1 9 2003

NOTICE OF ACCEPTANCE: SPECIFIC CONDITIONS

1. SCOPE

1.1 This approves a steel fixed window, as described in Section 2 of this Notice of Acceptance, designed to comply with the South Florida Building Code (SFBC), 1994 Edition for Miami-Dade County, for the locations where the pressure requirements, as determined by SFBC Chapter 23, do not exceed the Design Pressure Rating values indicated in the approved drawings.

2. PRODUCT DESCRIPTION

2.1 The **Series "Corporate 2000" Steel Fixed Window - Impact Resistant** and its components shall be constructed in strict compliance with the following documents: Drawing No **4835S2X-F**, titled "Corporate 2000 Steel" Sheets 1 through 4 of 4, dated 12/16/98 and 2/2/99, bearing the Miami-Dade County Product Control approval stamp with the Notice of Acceptance number and approval date by the Miami-Dade County Product Control Division. These documents shall hereinafter be referred to as the approved drawings.

3. LIMITATIONS

3.1 This approval applies to single unit applications only, as shown in approved drawings.

4. INSTALLATION

4.1 The steel fixed window and its components shall be installed in strict compliance with the approved drawings.

4.2 Hurricane protection system (shutters): the installation of this unit **will not require** a hurricane protection system.

5. LABELING

5.1 Each unit shall bear a permanent label with the manufacturer's name or logo, city, state and following statement: "Miami-Dade County Product Control Approved".

6. BUILDING PERMIT REQUIREMENTS

6.1 Application for building permit shall be accompanied by copies of the following:

- **6.1.1** This Notice of Acceptance
- **6.1.2** Duplicate copies of the approved drawings, as identified in Section 2 of this Notice of Acceptance, clearly marked to show the components selected for the proposed installation.
- **6.1.3** Any other documents required by the Building Official or the South Florida Building Code (SFBC) in order to properly evaluate the installation of this system.

Manuel Perez, P.E. Product Control Examiner
Product Control Division

Crittall Windows Ltd.

ACCEPTANCE No.: 00-0403.06

APPROVED : MAY 1 9 2000

EXPIRES : MAY 1 9 2003

NOTICE OF ACCEPTANCE: STANDARD CONDITIONS

1. Renewal of this Acceptance (approval) shall be considered after a renewal application has been filed and the original submitted documentation, including test supporting data, engineering documents, are no older than eight (8) years.

2. Any and all approved products shall be permanently labeled with the manufacturer's name, city, state, and the following statement: "Miami-Dade County Product Control Approved", or as specifically stated in the specific conditions of this Acceptance.

3. Renewals of Acceptance will not be considered if:
   a) There has been a change in the South Florida Building Code affecting the evaluation of this product and the product is not in compliance with the code changes;
   b) The product is no longer the same product (identical) as the one originally approved;
   c) If the Acceptance holder has not complied with all the requirements of this acceptance, including the correct installation of the product;
   d) The engineer who originally prepared, signed and sealed the required documentation initially submitted is no longer practicing the engineering profession.

4. Any revision or change in the materials, use, and/or manufacture of the product or process shall automatically be cause for termination of this Acceptance, unless prior written approval has been requested (through the filing of a revision application with appropriate fee) and granted by this office.

5. Any of the following shall also be grounds for removal of this Acceptance:
   a) Unsatisfactory performance of this product or process.
   b) Misuse of this Acceptance as an endorsement of any product, for sales, advertising or any other purpose.

6. The Notice of Acceptance number preceded by the words Miami-Dade County, Florida, and followed by the expiration date may be displayed in advertising literature. If any portion of the Notice of Acceptance is displayed, then it shall be done in its entirety.

7. A copy of this Acceptance as well as approved drawings and other documents, where it applies, shall be provided to the user by the manufacturer or its distributors and shall be available for inspection at the job site at all time. The engineer need not reseal the copies.

8. Failure to comply with any section of this Acceptance shall be cause for termination and removal of Acceptance.

9. This Notice of Acceptance consists of pages 1, 2 and this last page 3.

Manuel Perez, P.E. Product Control Examiner
Product Control Division

END OF THIS ACCEPTANCE

OUTSIDE ELEVATIONS

DO NOT SCALE

CORPORATE 2000 FIXED LIGHT

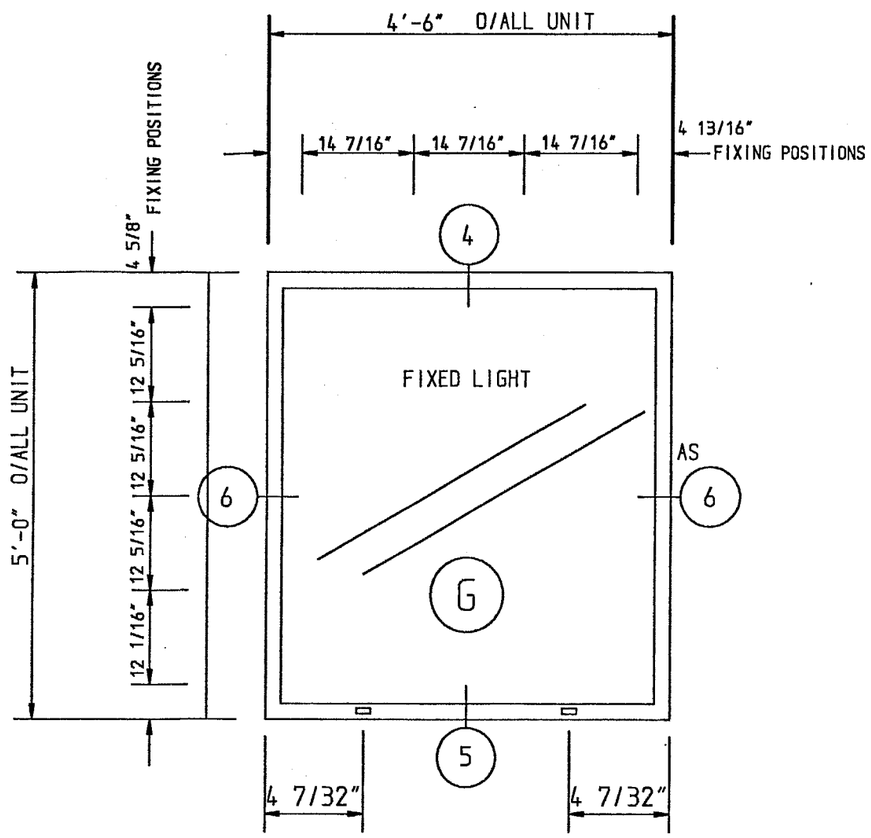

	GLAZING MATERIALS		
PART No:	DESCRIPTION		SUPPLIER
G	IMPACT GLASS SHALL CONSIST OF 1/4" CLEAR ANNEALED OR 1/4" CLEAR HEAT STRENGTHEND OR 3/16" CLEAR TEMPERED GLASS LAMINATED UNDER HEAT AND PRESSURE TO DUPOINT SENTRY GLASS COMPOSITE TYPE 457.		ROMAG INC
–	FIXING LUGS	GALV STEEL	C.W. Ltd
40112	FRAME MEMBER	GALV STEEL	C.W. Ltd
–	CAULKING	SILICONE	DOW
–	GLAZING MATERIALS	SILICONE AND FOAM TAPE	DOW

DESIGN PRESSURE= +50 PSF, -60 PSF

ALL SIZES NOTED ARE MAXIMUM FRAME SIZES

THIS UNIT WILL NOT REQUIRE
A HURRICANE PROTECTIVE SYSTEM

APPROVED AS COMPLYING WITH THE
SOUTH FLORIDA BUILDING CODE
DATE May 19, 2000
BY Manuel Perez
PRODUCT CONTROL DIVISION
BUILDING CODE COMPLIANCE OFFICE
ACCEPTANCE NO. 00-0403.06

INSTALLATION DRAWING

REV.	DESCRIPTION	INITIAL	DATE

CRITTALL

SECTION: CORPORATE 2000 STEEL			SCALE: 1 : 20
DESCRIPTION: FIXED LIGHT			
FINISH: RAL 9911 MATT CRITTALL WHITE P.P.C.			
DRAWING No: 4835S2X-F			SHEET No: 1
APPD. BY: N.H.BURGESS	DRAWN BY: A.M.WADE	DATE: 16 DEC 98	Installation Drawing

GALVANIZED TO B.S.729: 1971(1986) GIVING A MINIMUM COATING WEIGHT OF 13.56 OUNCES PER SQ YARD
POLYESTER POWDER COATED TO B.S.6497: 1984 GIVING A MINIMUM COATING OF 60 MICRONS ON SIGNIFICANT SURFACES

OUTSIDE ELEVATIONS

CORPORATE 2000 FIXED LIGHT

DO NOT SCALE

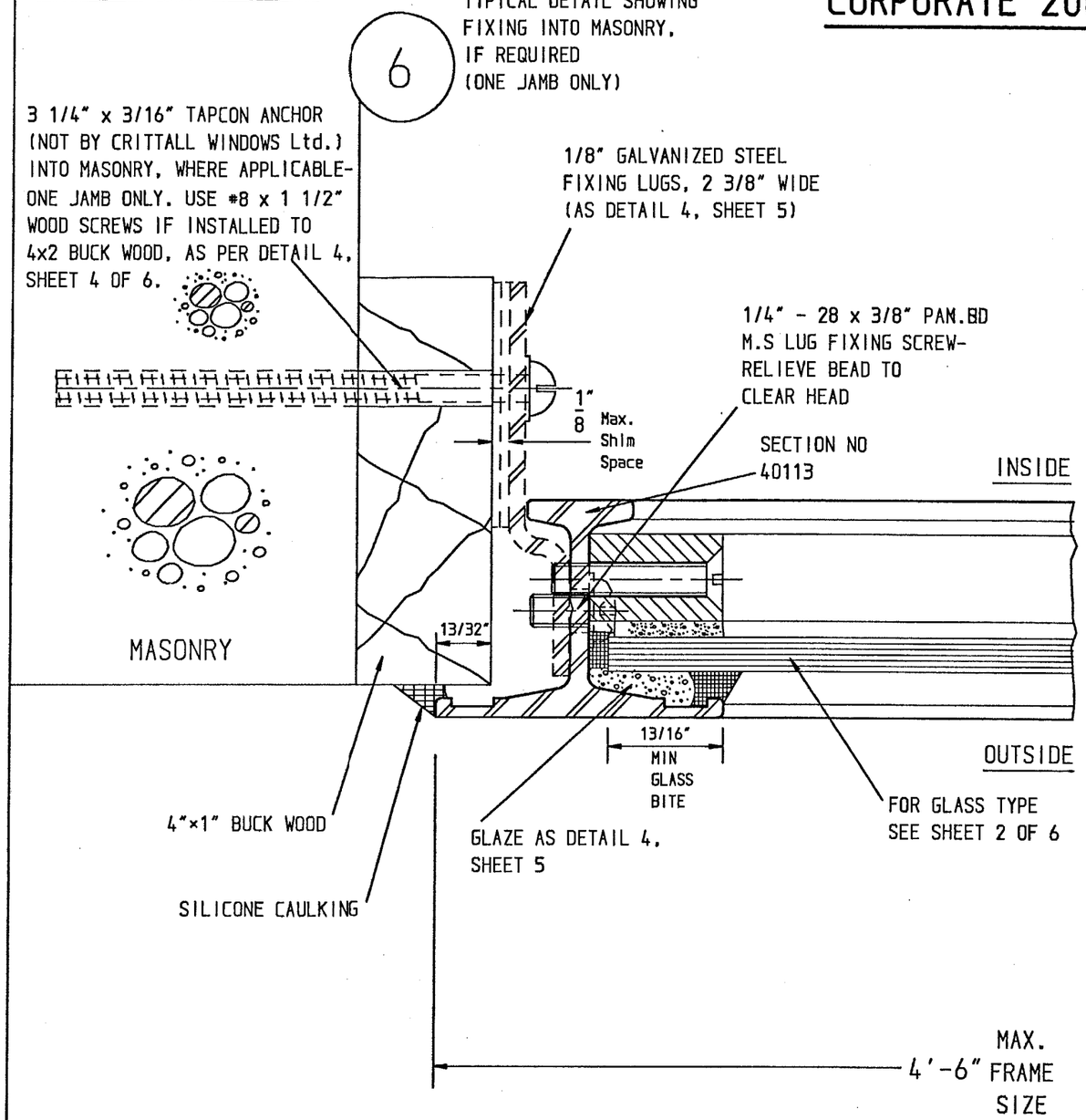

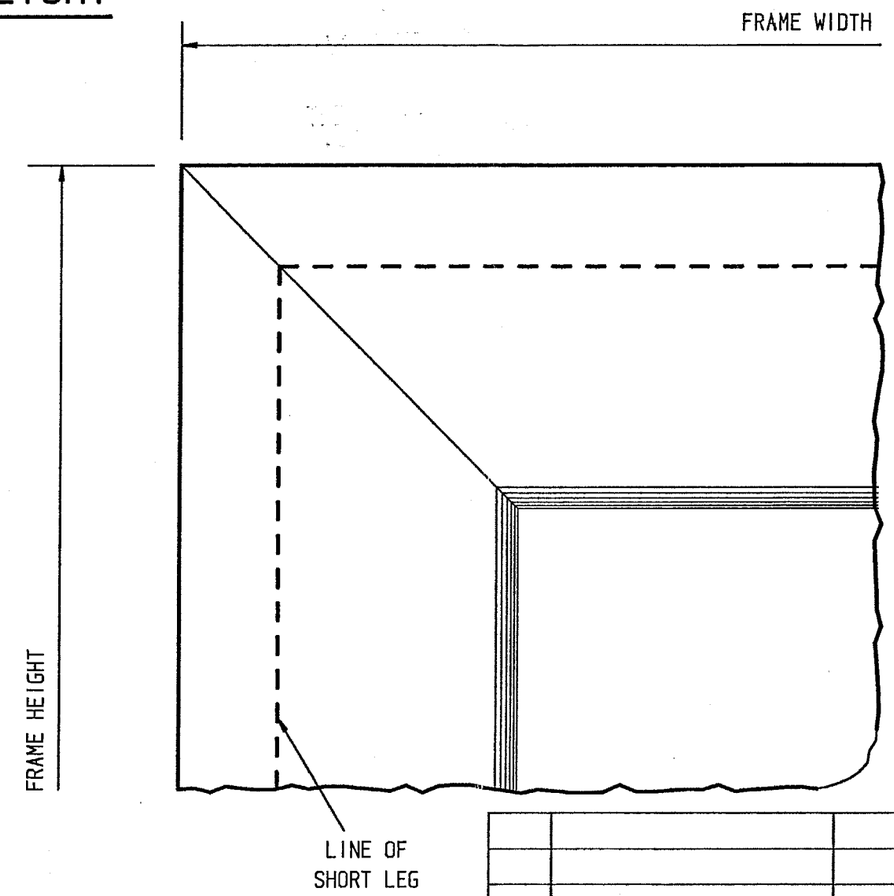

DETAIL OF MITRED CORNER TO WINDOW FW1

ALL CORNERS FULLY WELDED & CLEANED OFF FLUSH. GALVANIZING DRAINAGE HOLES TO BE SEALED AT WORKS WITH SILICONE.

APPROVED AS COMPLYING WITH THE SOUTH FLORIDA BUILDING CODE
DATE May 19, 2000
BY Manuel Serra
PRODUCT CONTROL DIVISION
BUILDING CODE COMPLIANCE OFFICE
ACCEPTANCE NO. 00-0403.06

INSTALLATION DRAWING

REV.	DESCRIPTION	INITIAL	DATE

CRITTALL

SECTION: CORPORATE 2000 STEEL			SCALE: FULL SIZE
DESCRIPTION: HORIZONTAL SECTION THROUGH FW1 (DETAIL 6)			
FINISH: RAL 9911 MATT CRITTALL WHITE P.P.C.			
DRAWING No: 4835S2X-F			SHEET No: 2
APPD. BY: N.H.BURGESS	DRAWN BY: A.M.WADE	DATE: 16 DEC 98	Installation Drawing

OUTSIDE ELEVATIONS

CORPORATE 2000 FIXED LIGHT

DO NOT SCALE

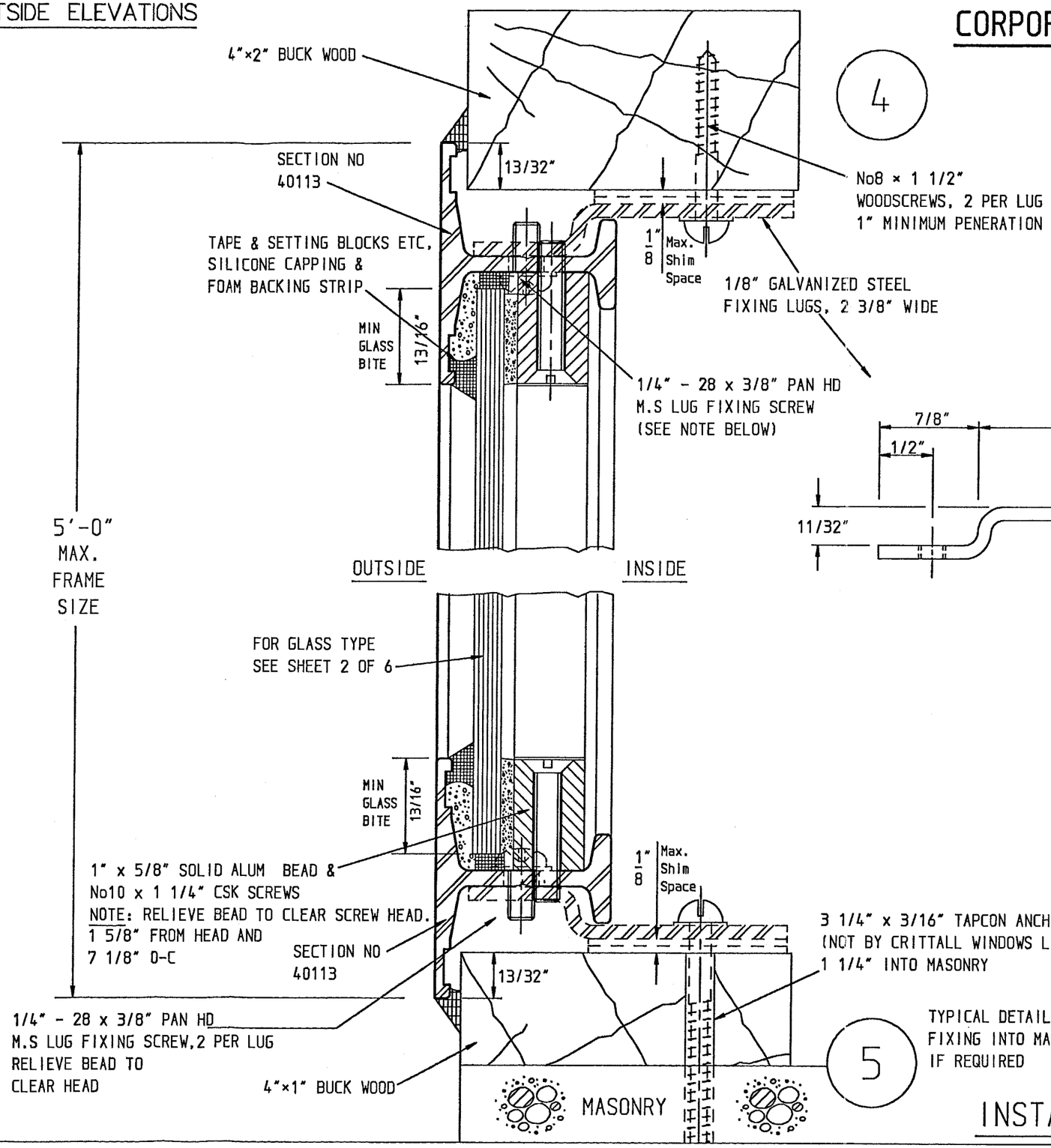

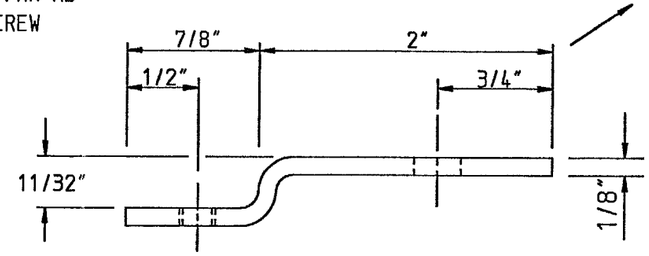

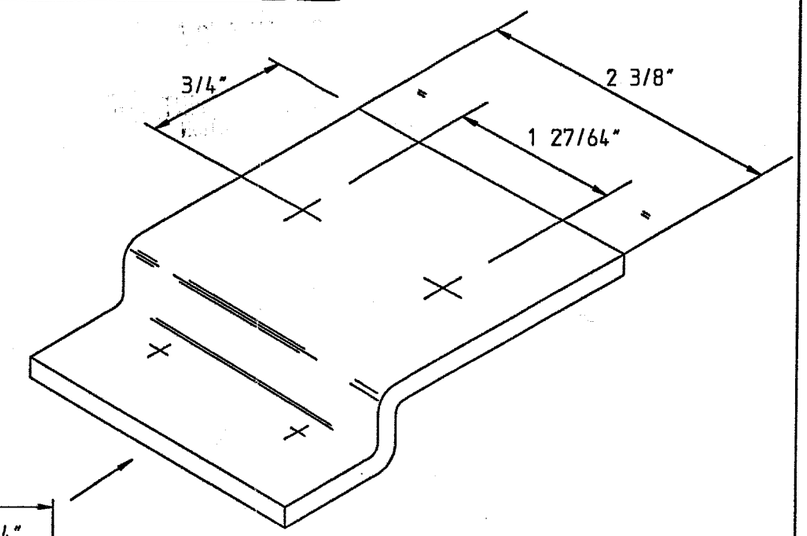

NOTE: THESE FIXING LUGS OCCUR AT
ALL FIXING POINTS-
SEE ELEVATION FOR POSITIONS

TYPICAL DETAIL SHOWING
FIXING INTO MASONRY,
IF REQUIRED

APPROVED AS COMPLYING WITH THE
SOUTH FLORIDA BUILDING CODE
DATE May 19, 2000
BY [signature]
PRODUCT CONTROL DIVISION
BUILDING CODE COMPLIANCE OFFICE
ACCEPTANCE NO. 00-0403.06

REV.	DESCRIPTION	INITIAL	DATE

CRITTALL

SECTION: CORPORATE 2000 STEEL	SCALE: FULL SIZE
DESCRIPTION: VERTICAL SECTION THROUGH FW1 (DETAILS 4 & 5)	
FINISH: RAL 9911 MATT CRITTALL WHITE P.P.C.	
DRAWING No: 4835S2X-F	SHEET No: 3

APPD. BY:	DRAWN BY:	DATE:	
N.H.BURGESS	A.M.WADE	16 DEC 98	Installation Drawing

INSTALLATION DRAWING

OUTSIDE ELEVATIONS

DO NOT SCALE

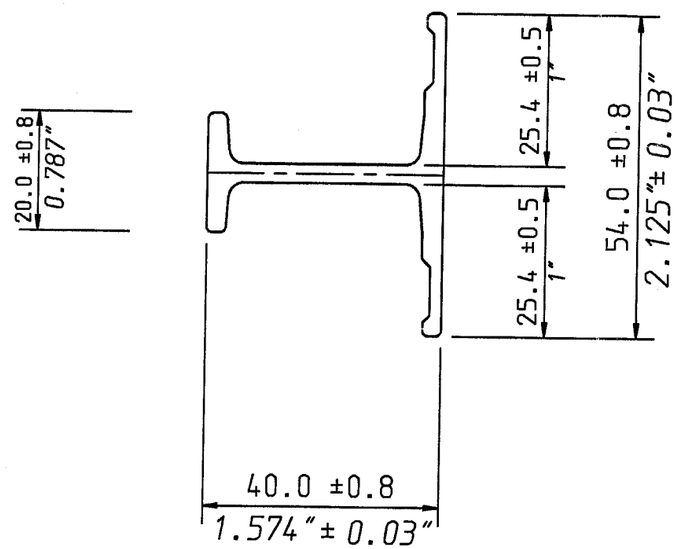

40113

FIXED LIGHT MEMBER

APPROVED AS COMPLYING WITH THE SOUTH FLORIDA BUILDING CODE
DATE May 19, 2009
BY Manuel Perez
PRODUCT CONTROL DIVISION
BUILDING CODE COMPLIANCE OFFICE
ACCEPTANCE NO. 00-0403.06

MECHANICAL PROPERTIES

TENSILE STRENGTH 25.7 TO 37.0 TON (US) FORCE/INCH^2
YIELD STRESS 16.7 TO 18.9 TON (US) FORCE/INCH^2
DESIGN WORKING STRESS 13.4 TON (US) FORCE/INCH^2
MODULUS OF ELASTICITY (E) YOUNGS MODULUS 15011 TON (US) FORCE/INCH^2
ELONGATION 22% MINIMUM
CO-EFFICIENT OF THERMAL EXPANSION 6.1 x 10^{-6} °F

INSTALLATION DRAWING

REV.	DESCRIPTION	INITIAL	DATE

CRITTALL

SECTION: CORPORATE 2000 STEEL			SCALE: FULL SIZE
DESCRIPTION: FRAME & SASH MEMBER DETAILS			
FINISH: RAL 9911 MATT CRITTALL WHITE P.P.C.			
DRAWING No: 4835S2X-F			SHEET No: 4
APPD. BY: N.H.BURGESS	DRAWN BY: A.M.WADE	DATE: 2 FEB 99	Installation Drawing