MIAMI-DADE

MIAMI-DADE COUNTY, FLORIDA
METRO-DADE FLAGLER BUILDING

BUILDING CODE COMPLIANCE OFFICE
METRO-DADE FLAGLER BUILDING
140 WEST FLAGLER STREET, SUITE 1603
MIAMI, FLORIDA 33130-1563
(305) 375-2901 FAX (305) 375-2908

CONTRACTOR LICENSING SECTION
(305) 375-2527 FAX (305) 375-2558

CONTRACTOR ENFORCEMENT SECTION
(305) 375-2966 FAX (305) 375-2908

PRODUCT CONTROL DIVISION
(305) 375-2902 FAX (305) 372-6339

PRODUCT CONTROL NOTICE OF ACCEPTANCE

Sansone Hurricane Shutters, Inc.
505 N.E. 27 Street
Pompano Beach FL 33064

Your application for Product Approval of:
"Residential Bertha" Accordion Shutter
under Chapter 8 of the Code of Miami-Dade County governing the use of Alternate Materials and Types of Construction, and completely described herein, has been recommended for acceptance by the Miami-Dade County Building Code Compliance Office (BCCO) under the conditions specified herein.

This approval shall not be valid after the expiration date stated below. BCCO reserves the right to secure this product or material at anytime from a jobsite or manufacturer's plant for quality control testing.
If this product or material fails to perform in the approved manner, BCCO may revoke, modify, or suspend the use of such product or material immediately. BCCO reserves the right to revoke this approval, if it is determined BCCO that this product or material fails to meet the requirements of the South Florida Building Code.

The expense of such testing will be incurred by the manufacturer.

Acceptance No.: 00-0411.01

Expires: 05/26/2003

Raul Rodriguez
Chief Product Control Division

THIS IS THE COVERSHEET, SEE ADDITIONAL PAGES FOR SPECIFIC AND GENERAL CONDITIONS

BUILDING CODE & PRODUCT REVIEW COMMITTEE

This application for Product Approval has been reviewed by the BCCO and approved by the Building Code and Product Review Committee to be used in Dade County, Florida under the conditions set forth above.

Francisco J. Quintana, R.A.
Director
Miami-Dade County
Building Code Compliance Office

Approved: 05/26/2000

Internet mail address: postmaster@buildingcodeonline.com **Homepage: http://www.buildingcodeonline.com**

NOTICE OF ACCEPTANCE: SPECIFIC CONDITIONS

1. SCOPE

This approves an Aluminum Extruded "Residential Bertha" Accordion Shutter, as described in Section 2 of this Notice of Acceptance, designed to comply with the South Florida Building Code, 1994 Edition for Miami-Dade County, for the locations where the pressure requirements, as determined by SFBC Chapter 23, do not exceed the Design Pressure Rating values indicated in the approved drawings.

2. PRODUCT DESCRIPTION

This Aluminum Extruded "Residential Bertha" Accordion Shutter and its components shall be constructed in strict compliance with the following documents: Drawing No. 00-140, titled "ASSA / Residential Bertha Accordion Shutter", prepared by Tilteco Inc., dated April 11, 2000, sheets 1 through 10 of 10, bearing the Miami-Dade County Product Control Approval stamp with the Notice of Acceptance number and approval date by the Miami-Dade County Product Control Division. These documents shall hereinafter be referred to as the approved drawings.

3. LIMITATIONS

All permanent set components, included but not limited to embedded anchor bolts, threaded cones, metal shields, headers and sills, must be protected against corrosion, contamination and damage at all times.

4. INSTALLATION

This Aluminum Extruded "Residential Bertha" Accordion Shutter and its components shall be installed in strict compliance with the approved drawings.

5. LABELING

Each unit shall bear a permanent label with the manufacturer's name or logo, city, state and the following statement: "Miami-Dade County Product Control Approved".

6. BUILDING PERMIT REQUIREMENTS

6.1 Application for building permit shall be accompanied by copies of the following:

- **6.1.1** This Notice of Acceptance.
- **6.1.2** Duplicate copies of the approved drawings, as identified in Section 2 of this Notice of Acceptance, clearly marked to show the components selected for the proposed installation.
- **6.1.3** Any other documents required by the Building Official or the South Florida Building Code (SFBC) in order to properly evaluate the installation of this system.

Helmy A. Makar, P.E.- Product Control Examiner
Product Control Division

Sansone Hurricane Shutters, Inc.

ACCEPTANCE No. : 00-0411.01

APPROVED : MAY 2 6 2000

EXPIRES : MAY 2 6 2003

NOTICE OF ACCEPTANCE: STANDARD CONDITIONS

1 Renewal of this Acceptance (approval) shall be considered after a renewal application has been filed and the original submitted documents, including test-supporting data, engineering documents, are no older than eight (8) years.

2. Any and all approved products shall be permanently labeled with the manufacturer's name, city, state, and the following statement: "Miami-Dade County Product Control Approved", or as specifically stated in the specific conditions of this Acceptance.

3. Renewals of Acceptance will not be considered if:
   a. There has been a change in the South Florida Building Code affecting the evaluation of this product and the product is not in compliance with the code changes.
   b. The product is no longer the same product (identical) as the one originally approved.
   c. If the Acceptance holder has not complied with all the requirements of this acceptance, including the correct installation of the product.
   d. The engineer, who originally prepared, signed and sealed the required documentation initially submitted, is no longer practicing the engineering profession.

4. Any revision or change in the materials, use, and/or manufacture of the product or process shall automatically be cause for termination of this Acceptance, unless prior written approval has been requested (through the filing of a revision application with appropriate fee) and granted by this office.

5. Any of the following shall also be grounds for removal of this Acceptance:
   a. Unsatisfactory performance of this product or process.
   b. Misuse of this Acceptance as an endorsement of any product, for sales, advertising or any other purposes.

6. The Notice of Acceptance number preceded by the words Miami-Dade County, Florida, and followed by the expiration date may be displayed in advertising literature. If any portion of the Notice of Acceptance is displayed, then it shall be done in its entirety.

7. A copy of this Acceptance as well as approved drawings and other documents, where it applies, shall be provided to the user by the manufacturer or its distributors and shall be available for inspection at the job site at all time. The engineer needs not reseal the copies.

8. Failure to comply with any section of this Acceptance shall be cause for termination and removal of Acceptance.

9. This Notice of Acceptance consists of pages 1, 2 and this last page 3.

END OF THIS ACCEPTANCE

Helmy A. Makar, P.E.- Product Control Examiner
Product Control Division

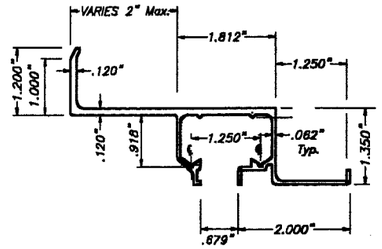

(A1) WALL HEADERS
(A1) WALL HEADERS (INVERTED USE)
SCALE: 3/8" = 1"

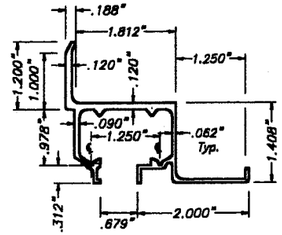

(A2) WALL HEADER
(A2) WALL HEADER (INVERTED USE)
SCALE: 3/8" = 1"

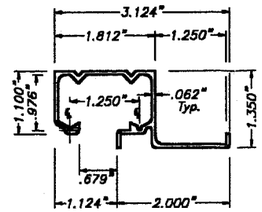

(B) CEILING HEADER
SCALE: 3/8" = 1"

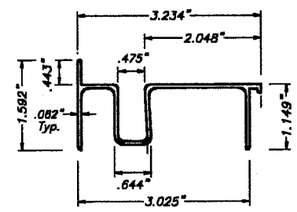

(C) SILL
SCALE: 3/8" = 1"

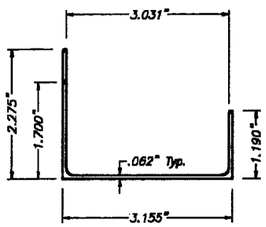

(D) SILL ADAPTER
SCALE: 3/8" = 1"

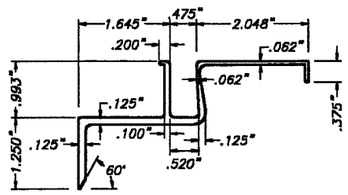

(E) BOTTOM BUILT-OUT
SCALE: 3/8" = 1"

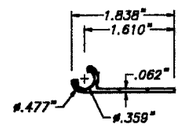

(F) FEMALE END SLAT
SCALE: 3/8" = 1"

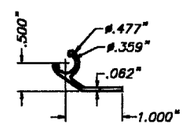

(F1) STARTER STRIP
SCALE: 3/8" = 1"

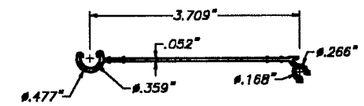

(G) RESIDENTIAL BLADE
SCALE: 3/8" = 1"

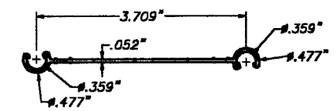

(G1) FEMALE RESIDENTIAL BLADE
SCALE: 3/8" = 1"

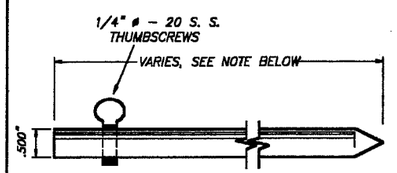

(H) LOCKING PIN
SCALE: 3/8" = 1"

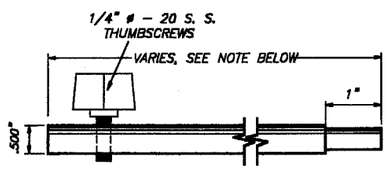

(H1) ALTERNATE LOCKING PIN
SCALE: 3/8" = 1"

6" Min. FOR UP TO 9'-0" SHUTTER BLADE LENGTHS,
ø 12" Min. FOR SHUTTER BLADE LENGTHS GREATER THAN UP TO 12'-0".

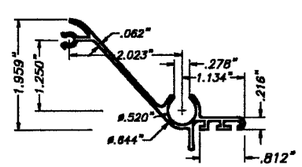

(I) MALE LOCK SLAT
SCALE: 3/8" = 1"

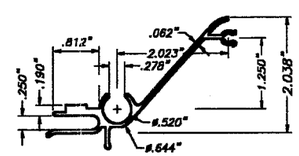

(J) FEMALE LOCK SLAT
SCALE: 3/8" = 1"

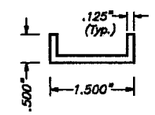

(K) LOCK CLIP
4" LONG
SCALE: 3/8" = 1"

GENERAL NOTES:

1. ACCORDION SHUTTER HAS BEEN DESIGNED IN ACCORDANCE WITH THE DADE COUNTY, 1994 EDITION OF THE SOUTH FLORIDA BUILDING CODE.
   DESIGN WIND LOADS SHALL BE DETERMINED AS PER SECTION 6 OF ASCE 7-88, WITH 110 m.p.h. BASIC WIND SPEED.
   ACCORDION SHUTTER'S ADEQUACY FOR IMPACT AND FATIGUE RESISTANCE HAS BEEN VERIFIED IN ACCORDANCE WITH SECTIONS 2315 & 2314 RESPECTIVELY OF THE ABOVE MENTIONED CODE. AS PER ATL REPORT # 0902.01-98.
2. STAINLESS STEEL SHEET METAL SCREWS USED AT LOUVER PIN SHALL BE # 10 x 3", 410-HT MINIMUM SERIES W/ 135.0 ksi YIELD POINT & 180 ksi TENSILE STRENGTH. SCREWS SHALL BE COATED WITH XYLAN 5000 SERIES FLUOROPOLYMER COATINGS AS MANUFACTURED BY WHITFORD Co, BOX 507. WEST CHESTER PA. 19381.
3. ALL ALUMINUM EXTRUSIONS SHALL BE 6063-T6 ALLOY.
4. ALL SCREWS TO BE STAINLESS STEEL 304 OR 316 SERIES W/ 50 ksi YIELD POINT AND 90 ksi TENSILE STRENGTH.
5. ALL ALUMINUM POP RIVETS TO BE 5052 ALUMINUM ALLOY WITH ALUMINUM MANDREL.
6. BOLTS TO BE 2024-T4 ALUMINUM ALLOY GALVANIZED OR STAINLESS STEEL WITH 35 ksi MINIMUM MINIMUM YIELD POINT.
7. ANCHORS TO WALL SHALL BE AS FOLLOWS: (UNLESS OTHERWISE NOTED)
   (A) TO EXISTING POURED CONCRETE:
   - 1/4" ø TAPCON ANCHORS, AS MANUFACTURED BY I.T.W. RAMSET OR ELCO INDUSTRIES, INC.
   - 1/4" ø RAWL ZAMAC NAILIN ANCHORS, AS MANUFACTURED BY THE RAWL PLUG COMPANY, INC.
   - 1/4" ø x 7/8" RAWL CALK-IN AS MANUFACTURED BY THE RAWL PLUG COMPANY.

   NOTES:
   A.1) MINIMUM EMBEDMENT OF TAPCON ANCHORS INTO POURED CONCRETE IS 1 3/4". MINIMUM EMBEDMENT OF RAWL ZAMAC NAILIN IS 1 3/6".
   A.2) 1/4" ø x 7/8" RAWL CALK-IN ANCHORS SHALL BE ENTIRELY EMBEDDED INTO THE POURED CONCRETE. NO EMBEDMENT INTO STUCCO SHALL BE PERMITTED.
   1/4" ø-20 SCREWS USED SHALL BE 1 1/2" LONG MINIMUM SHOULD STUCCO EXIST.
   A.3) IN CASE THAT PRECAST STONE, PRECAST CONCRETE PANELS, OR PAVERS BE FOUND ON THE EXISTING WALL OR FLOOR, ANCHORS SHALL BE LONG ENOUGH TO REACH THE MAIN STRUCTURE BEHIND SUCH PANELS. ANCHORAGE SHALL BE AS INDICATED ON NOTES A.1 & A.2 ABOVE.

   (B) TO EXISTING CONCRETE BLOCK WALL:
   - 1/4" ø TAPCON ANCHORS AS MANUFACTURED BY I.T.W. RAMSET OR ELCO INDUSTRIES, INC.
   - 1/4" ø RAWL ZAMAC NAILIN ANCHORS AS MANUFACTURED THE RAWL PLUG COMPANY, INC.
   - 1/4" ø x 7/8" RAWL CALK-IN AS MANUFACTURED BY THE RAWL PLUG COMPANY, INC.

   NOTES:
   B.1) MINIMUM EMBEDMENT OF TAPCON ANCHORS, AND RAWL ZAMAC NAILIN ANCHORS INTO THE CONCRETE BLOCK UNIT SHALL BE 1 1/4".
   B.2) 1/4" ø x 7/8" RAWL CALK-IN ANCHORS SHALL BE ENTIRELY EMBEDDED INTO THE CONCRETE BLOCK UNIT. NO EMBEDMENT INTO STUCCO SHALL BE PERMITTED.
   1/4" ø-20 SCREWS USED SHALL BE 1 1/2" LONG MINIMUM SHOULD STUCCO EXIST.
   B.3) IN CASE THAT PRECAST STONE OR PRECAST CONCRETE PANELS BE FOUND ON THE EXISTING WALL, ANCHORS SHALL BE LONG ENOUGH TO REACH THE MAIN STRUCTURE BEHIND SUCH PANELS. ANCHORAGE SHALL BE 1 1/4" MINIMUM FOR ANCHORS MENTIONED IN B.1.), & 7/8" FOR ANCHORS MENTIONED IN B.2.).

   (C) ANCHORS SHALL BE INSTALLED FOLLOWING ALL OF THE RECOMENDATIONS AND SPECIFICATIONS OF THE ANCHOR'S MANUFACTURER.
8. BLADE (G), AND THE KNUCKLES FOR CENTERMATES (I), (J), (L) & (M), & THE STARTERS (F) & (F1) ARE UNDER THE PATENT OF EASTERN METALS.
9. IT SHALL BE THE RESPONSIBILITY OF THE CONTRACTOR TO VERIFY THE SOUNDNESS OF THE STRUCTURE WHERE SHUTTER IS TO BE ATTACHED TO INSURE PROPER ANCHORAGE.
10. EACH UNIT MUST BEAR A PERMANENT LABEL IN A VISIBLE PLACE WITH A WARNING NOTE INSTRUCTING THE TENANT OR HOME OWNER THAT ALL LOCKING PINS, AS WELL AS BOTH LOCKERS MUST BE PROPERLY INSTALLED & BOLTED DURING PERIODS OF HURRICANE WARNING.
11. SHUTTER'S MANUFACTURER STAMP SHALL BE PLACED ON THE EXPOSED SURFACE OF THE FEMALE LOCK SLAT (COMPONENT) (I) OR (L))
    ONE LABEL SHALL BE PLACED FOR EVERY OPENING, LABEL SHALL READ AS FOLLOWS:
    SANSONE HURRICANE SHUTTERS, INC.
    POMPANO BEACH, FL
    MIAMI-DADE COUNTY PRODUCT CONTROL APPROVED.

COMPONENTS

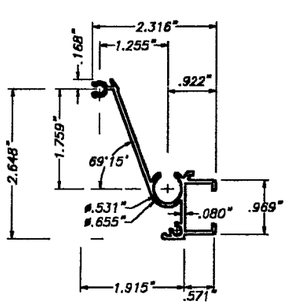

(L) MALE LOCK SLAT
SCALE: 3/8" = 1"

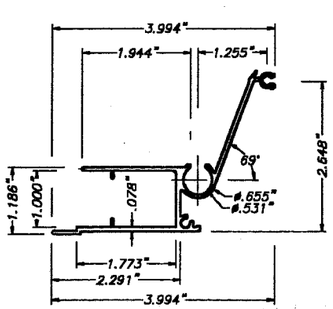

(M) FEMALE LOCK SLAT
SCALE: 3/8" = 1"

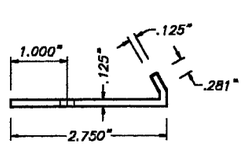

PLAN

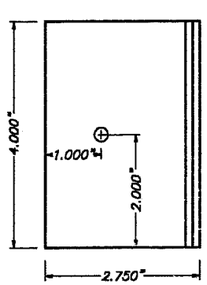

FRONT ELEVATION

(N) LOCKER
SCALE: 3/8" = 1"

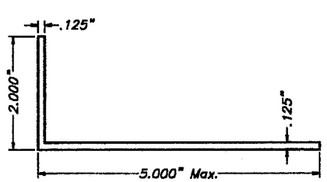

(O) ALUMINUM ANGLE
SCALE: 3/8" = 1"

APPROVED AS COMPLYING WITH THE
SOUTH FLORIDA BUILDING CODE
DATE May 26, 2000
BY Henry H. Mahan
PRODUCT CONTROL DIVISION
BUILDING CODE COMPLIANCE OFFICE
ACCEPTANCE NO. 00-0411.01

MIAMI-DADE COUNTY

4/13/00

TILTECO INC.
TILLIT TESTING & ENGINEERING COMPANY
6595 N.W. 36th. St., Ste. 217, VIRGINIA GARDENS, FLORIDA 33166
Phone : (305)871-1530 . Fax : (305)871-1531
WALTER A. TILLIT Jr., P. E.
FLORIDA Lic. # 44167

ASSA / RESIDENTIAL BERTHA ACCORDION SHUTTER

SANSONE HURRICANE SHUTTERS, INC.
(ASSA # 04)
505 N.E. 27th STREET
POMPANO BEACH, FL 33064

REV. No	DESCRIPTION	DATE	REV. No	DESCRIPTION	DATE
1	–	–	3	–	–
2	–	–	4	–	–

AS SHOWN
SCALE

4/11/00
DATE

00 – 140
DRAWING No

SHEET 1 OF 10

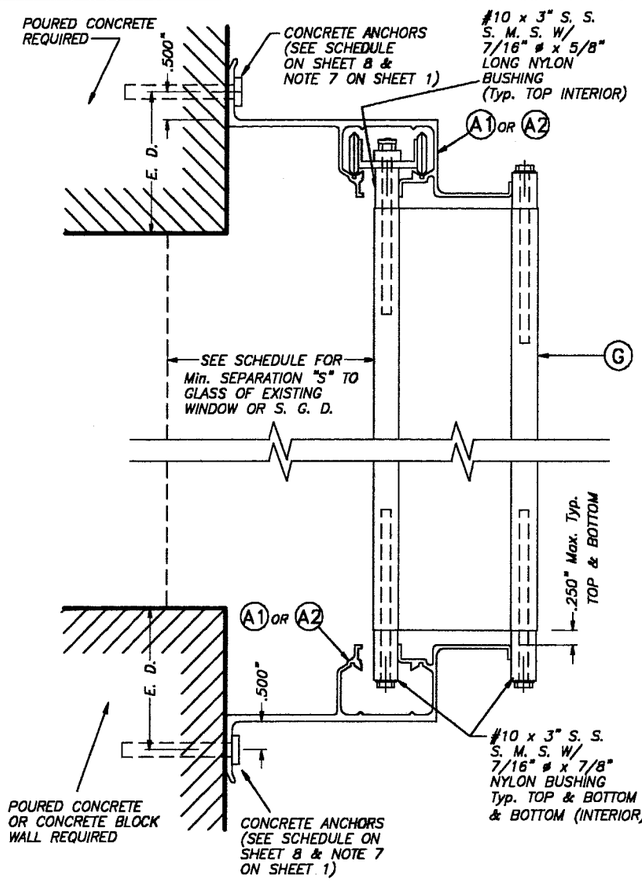

WALL MOUNTING INSTALLATION

– SECTION A

SCALE : 3/8" = 1"

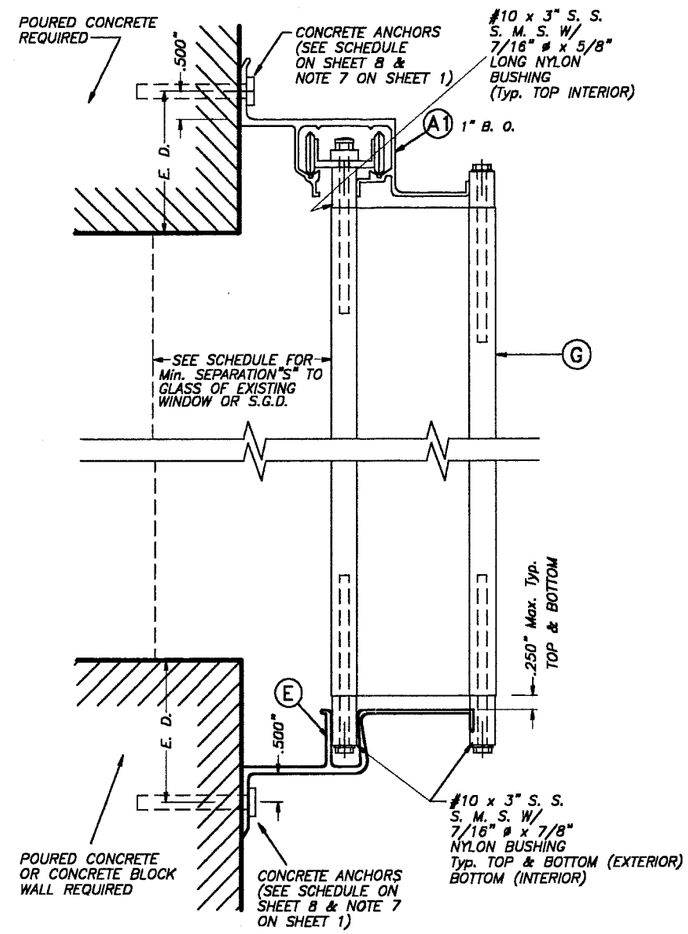

WALL MOUNTING INSTALLATION

– SECTION A1

SCALE : 3/8" = 1"

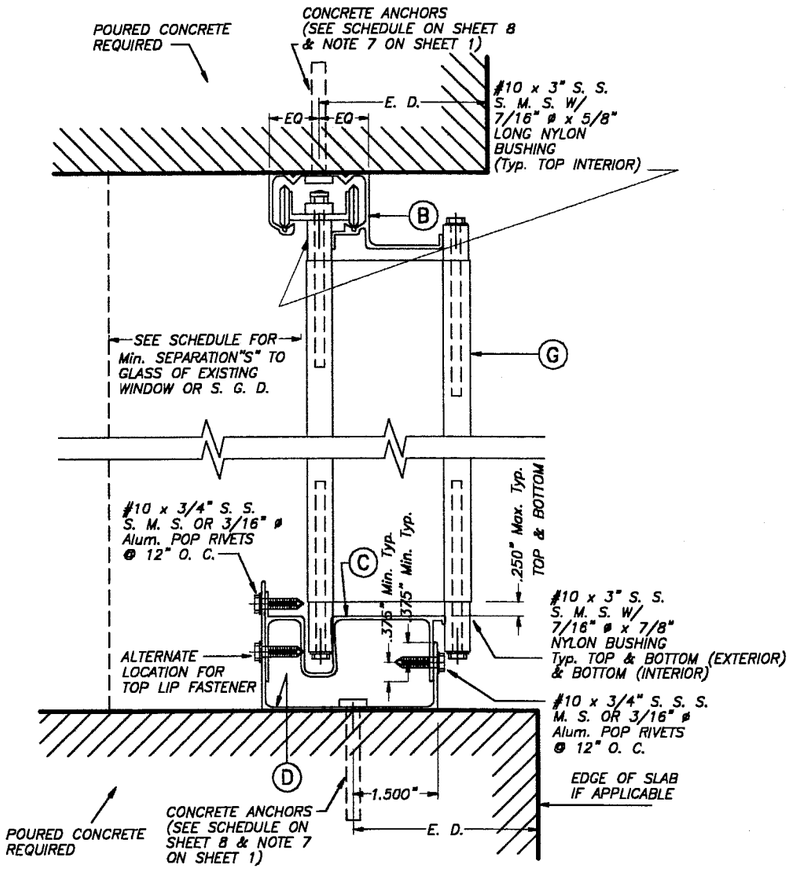

CEILING & FLOOR MOUNT. INSTALLAT.

– SECTION B

SCALE : 3/8" = 1"

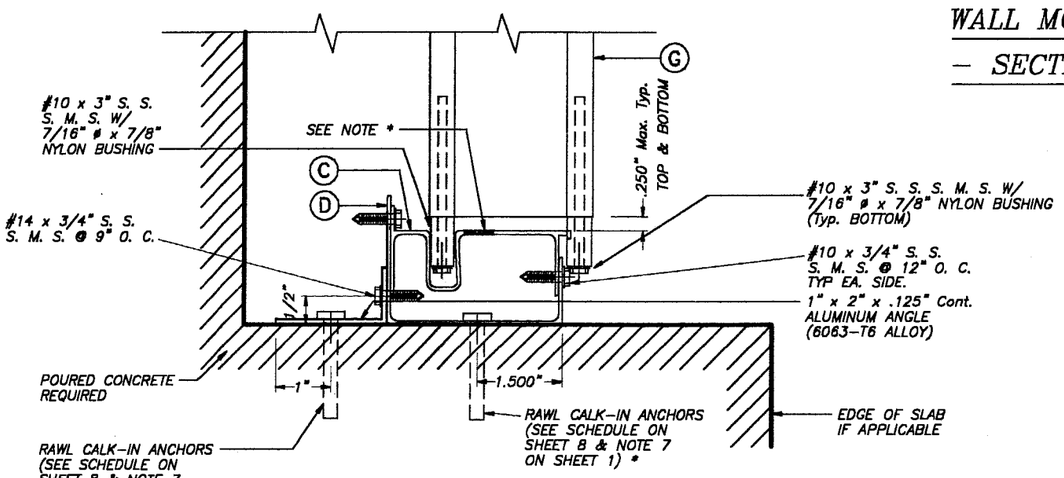

REMOVABLE FLOOR MOUNTING INSTALLATION

– SECTION B1

SCALE : 3/8" = 1"

* ALTERNATIVELY TO 1" x 2" Alum. ANGLE W/ ANCHOR, DRILL HOLE AT (C) TO INSTALL RAWL CALK-IN AT (D). COVER HOLE WITH NYLON CAPS.

E. D. = EDGE DISTANCE (SEE SCHEDULE ON SHEET 8 OF 10)

NOTE FOR COMBINATION OF SECTIONS :

WALL/FLOOR/CEILING MOUNTING SECTIONS CAN BE COMBINED IN ANY WAY TO SUIT ANY INSTALLATION.

APPROVED AS COMPLYING WITH THE
SOUTH FLORIDA BUILDING CODE
DATE May 26, 2000
BY Helena A. Mola
PRODUCT CONTROL DIVISION
BUILDING CODE COMPLIANCE OFFICE
ACCEPTANCE NO. 00-0411.01

MIAMI-DADE COUNTY

4/13/00

TILLECO INC.
TILLIT TESTING & ENGINEERING COMPANY
6595 N.W. 36th St., Ste. 217, VIRGINIA GARDENS, FLORIDA 33166
Phone : (305)871-1530 . Fax : (305)871-1531
WALTER A. TILLIT Jr., P. E.
FLORIDA Lic. # 44167

ASSA / RESIDENTIAL BERTHA ACCORDION SHUTTER

SANSONE HURRICANE SHUTTERS, INC.
(ASSA # 04)
505 N.E. 27th STREET
POMPANO BEACH, FL 33064

REV. No	DESCRIPTION	DATE	REV. No	DESCRIPTION	DATE
1	–	–	3	–	–
2	–	–	4	–	–

AS SHOWN SCALE
4/11/00 DATE
00 – 140 DRAWING No
SHEET 2 OF 10

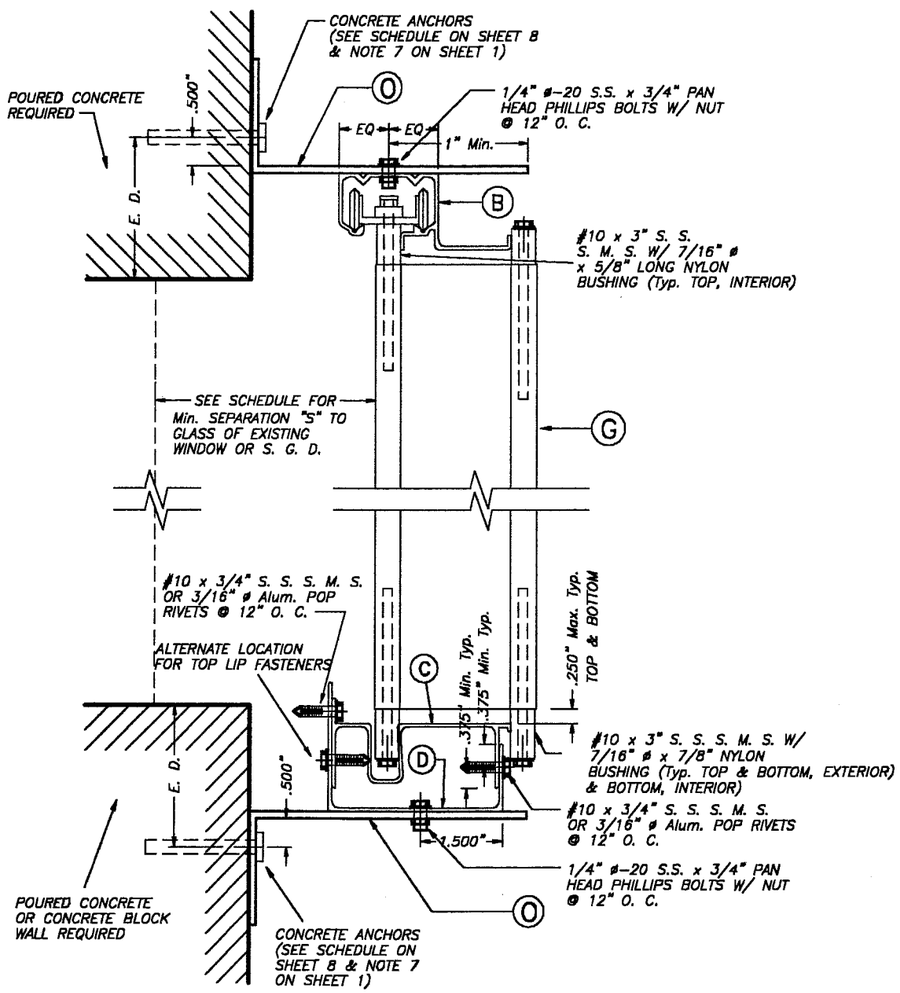

WALL MOUNTING INSTALLATION (BUILD-OUT) – SECTION C

SCALE : 3/8" = 1'

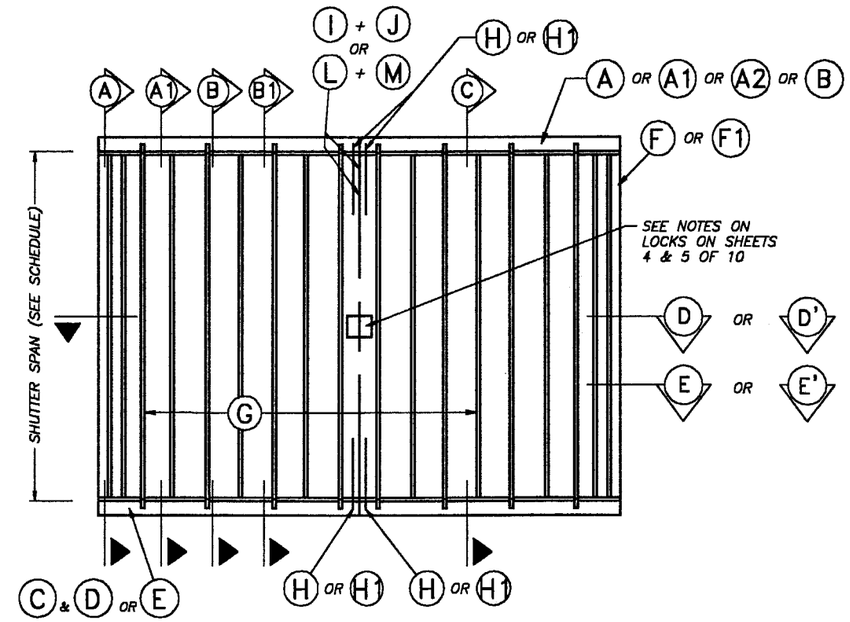

TYPICAL ELEVATION N. T. S.

E. D. = EDGE DISTANCE (SEE SCHEDULE ON SHEET 8 OF 10)

NOTE FOR COMBINATION OF SECTIONS :

WALL/FLOOR/CEILING MOUNTING SECTIONS CAN BE COMBINED IN ANY WAY TO SUIT ANY INSTALLATION.

APPROVED AS COMPLYING WITH THE SOUTH FLORIDA BUILDING CODE
DATE May 26 2000
BY [signature]
PRODUCT CONTROL DIVISION
BUILDING CODE COMPLIANCE OFFICE
ACCEPTANCE NO. 00-0411.01

MIAMI-DADE COUNTY

4/13/00

TILTECO INC.
TILLIT TESTING & ENGINEERING COMPANY
6595 N.W. 36th. St., Ste. 217, VIRGINIA GARDENS, FLORIDA 33166
Phone : (305)871-1530 . Fax : (305)871-1531
WALTER A. TILLIT Jr., P. E.
FLORIDA Lic. # 44167

ASSA / RESIDENTIAL BERTHA ACCORDION SHUTTER

SANSONE HURRICANE SHUTTERS, INC.
(ASSA # 04)
505 N.E. 27th STREET
POMPANO BEACH, FL 33064

REV. No	DESCRIPTION	DATE	REV. No	DESCRIPTION	DATE
1	–	–	3	–	–
2	–	–	4	–	–

AS SHOWN SCALE
4/11/00 DATE
00 – 140 DRAWING No
SHEET 3 OF 10

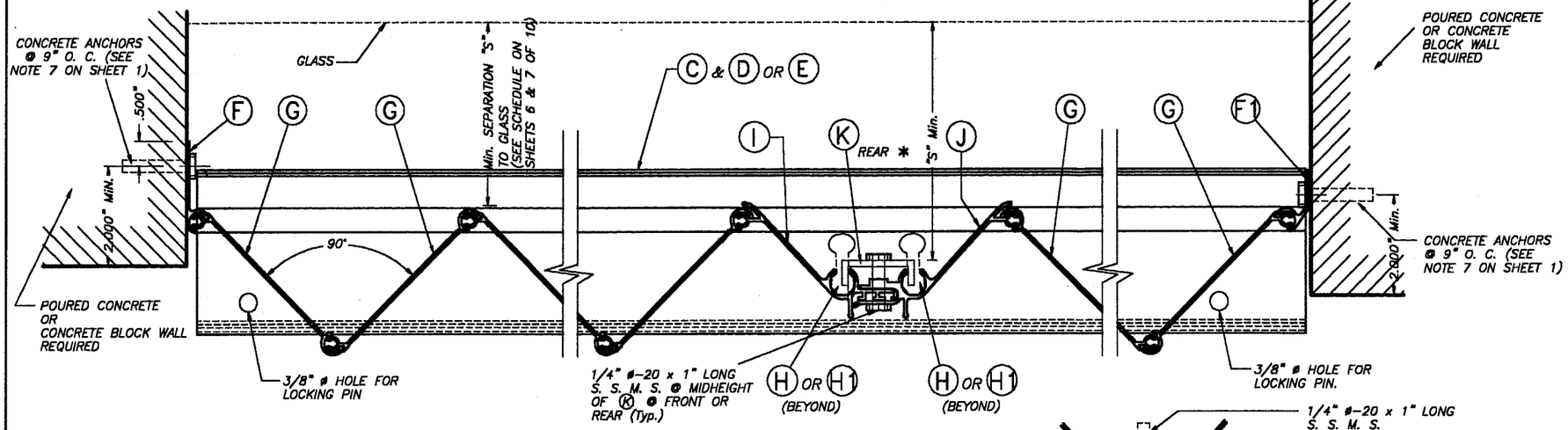

SECTION D

SCALE: 3/8" = 1"

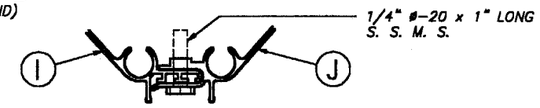

NOTES ON LOCKS: APPLICABLE TO LOCK DETAILS SHOWN ON THIS SHEET.

* CENTERMATES (I) & (J) SHALL ALWAYS BE LOCKED BY USING LOCK CLIP (K) INSTALLED FROM THE INSIDE OF SHUTTER W/ 1/4" ø-20 x 1" S. S. SIDEWALK BOLT AS SHOWN ON SECTIONS D & E. BOLT SHALL PENETRATE (K) LOCK CLIP, AS WELL AS (I) & (J) ENTIRELY. LOCK CLIP (K) 1/2" FLANGES SHALL FIT ENTIRELY INTO (I) & (J) LOCKING PIN GROOVES BEFORE SIDEWALK BOLT IS TIGHTENED.

** ALTERNATIVELY TO USING (K) LOCK CLIP, CENTERMATES (I) & (J) SHALL ALWAYS BE LOCKED BY INSTALLING A 1/4" ø-20 x 1" S. S. SIDEWALK BOLT DIRECTLY THRU BOTH CENTERMATES. FOR THIS PURPOSE, (I) & (J) CENTERMATES SHALL BE PRE-DRILLED AT THE BOLT LOCATION AS WELL AS TAPPED THRU IN ORDER TO ACCEPT THE 1/4" ø-20 SIDEWALK BOLT. THIS BOLT MAY BE INSTALLED FROM EITHER THE FRONT OR REAR OF SHUTTER.

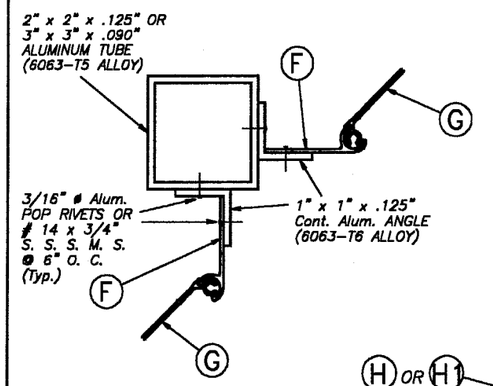

CASE 1

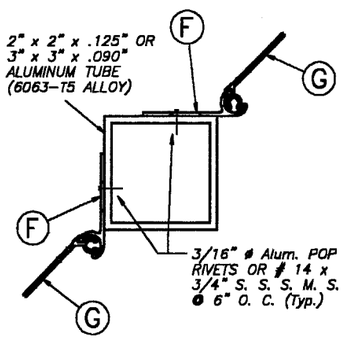

CASE 3

SECTIONS D, D' & E W/O (K) **

SCALE: 3/8" = 1"

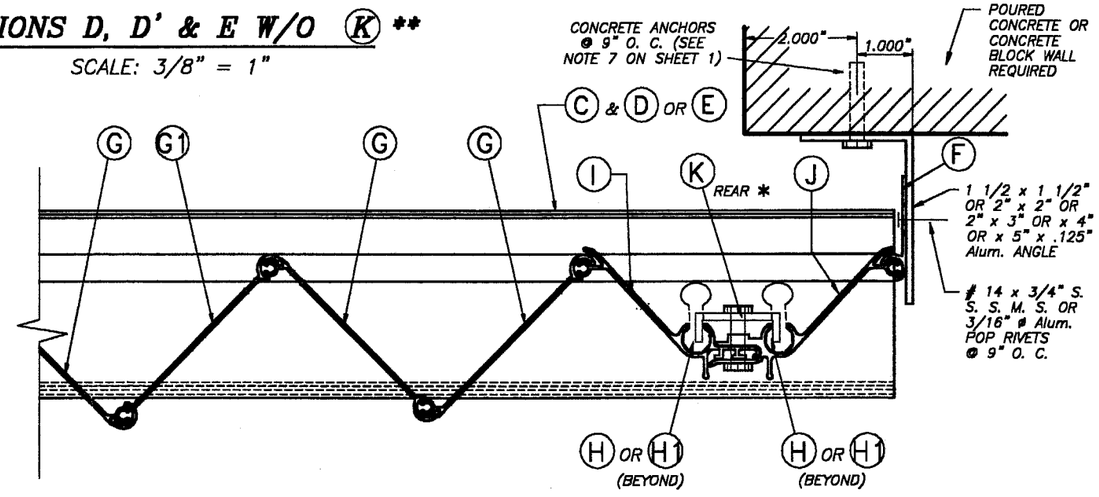

SECTION D' : ONE SIDED SHUTTER END CONNECTION DETAIL

SCALE: 3/8" = 1"

CASE 2

SECTIONS E

SCALE: 3/8" = 1"

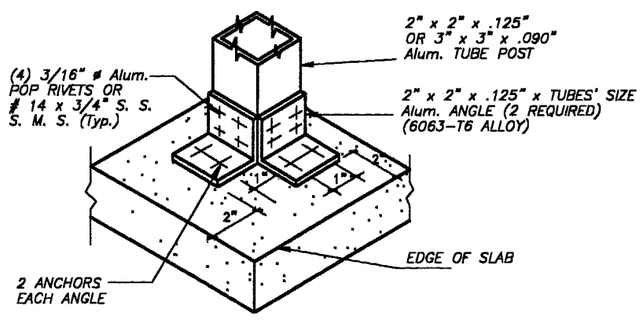

ISOMETRIC (CORNER POST) & (Typ. AT TOP BOTTOM SLABS)

4/13/00

APPROVED AS COMPLYING WITH THE SOUTH FLORIDA BUILDING CODE
DATE May 26, 2000
BY [signature]
PRODUCT CONTROL DIVISION
BUILDING CODE COMPLIANCE OFFICE
ACCEPTANCE NO. 00-0411.01

MIAMI-DADE COUNTY

TILTECO INC.
TILLIT TESTING & ENGINEERING COMPANY
6595 N.W. 36th. St., Ste. 217, VIRGINIA GARDENS, FLORIDA 33166
Phone : (305)871-1530 . Fax : (305)871-1531
WALTER A. TILLIT Jr., P. E.
FLORIDA Lic. # 44167

ASSA / RESIDENTIAL BERTHA ACCORDION SHUTTER

SANSONE HURRICANE SHUTTERS, INC.
(ASSA # 04)
505 N.E. 27th STREET
POMPANO BEACH, FL 33064

REV. No	DESCRIPTION	DATE	REV. No	DESCRIPTION	DATE
1	–	–	3	–	–
2	–	–	4	–	–

AS SHOWN SCALE

4/11/00 DATE

00 – 140 DRAWING No

SHEET 4 OF 10

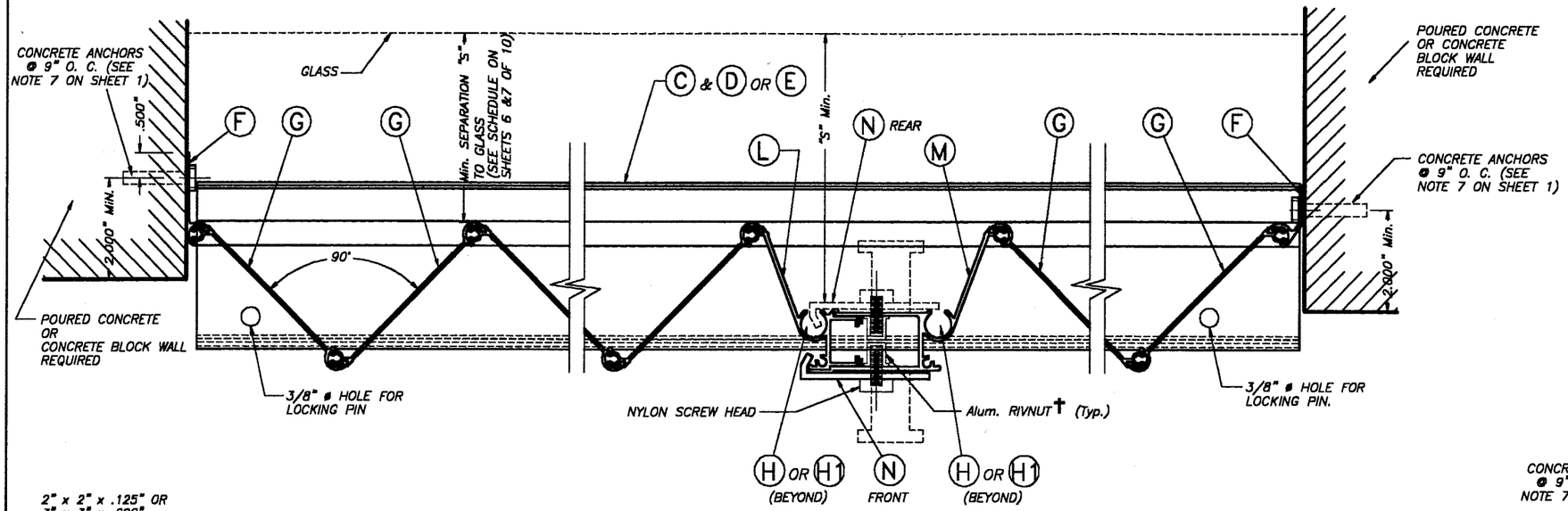

NOTES ON LOCKS : APPLICABLE TO LOCK DETAILS SHOWN ON THIS SHEET.

* LOCKER (N) SHALL ALWAYS BE USED FOR ANY SPAN AND INSTALLATIONS AT ANY ELEVATION.
LOCKER (N) MAY BE USED AS AN INSIDE OR OUTSIDE LOCKER IF ATTACHED TO (L) & (M) W/ 1/4" ø-20 x 1" LONG S. S. THREADED BOLT W/ 1/4" ø-20 x 5/8" INTERNALLY THREADED ALUMINUM RIVNUT. SEE INSTALLATION DETAIL ON THIS SHEET.

** FOR INSTALLATIONS AT ANY ELEVATION OF BUILDING AND IN ADDITION TO (N) LOCKERS, A REGULAR T LOCK MAY BE USED FOR SECURITY PURPOSES AT ANY DESIRED LOCATION OF CENTERMATE (INSIDE OR OUTSIDE).
WHEN USED INSIDE, MINIMUM SEPARATION TO GLASS SHALL ALSO BE VERIFIED FROM THE TIP OF SUCH T LOCK OR FROM THE OTHER SHUTTER COMPONENTS SHOWN ON SECTION D (WHICHEVER IS MORE CRTICAL).

†: SERIES 9444 ALUMINUM (2024-T3 ALLOY) LARGE FLANGE THIN SHEET NUTSERT, PART # 0820, AS MANUFACTURED BY AVDEL CHERRY TEXTORN, PARSIPPENY, NEW JERSEY 07054 OR EQUAL.

SECTION D

SCALE: 3/8" = 1"

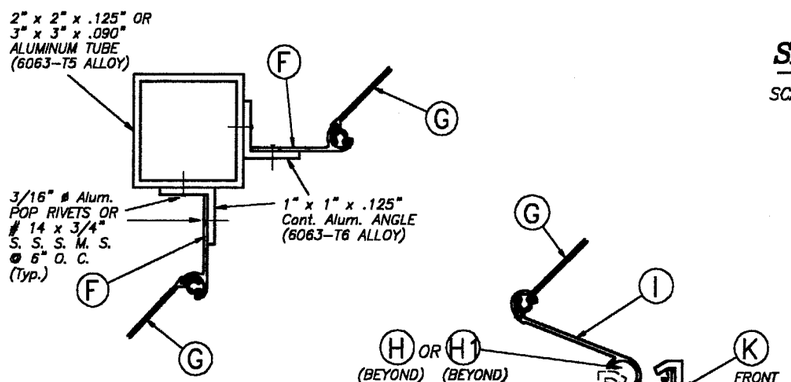

CASE 1

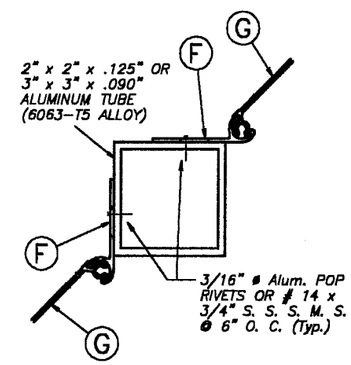

CASE 3

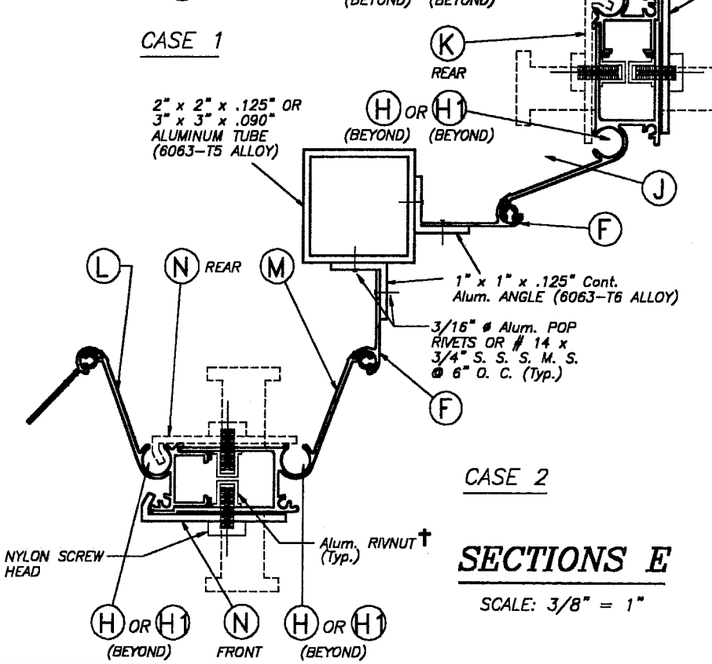

CASE 2

SECTIONS E

SCALE: 3/8" = 1"

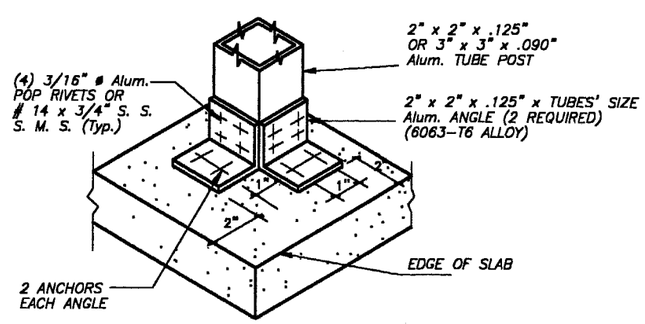

ISOMETRIC (CORNER POST)

(Typ. AT TOP & BOTTOM SLABS)

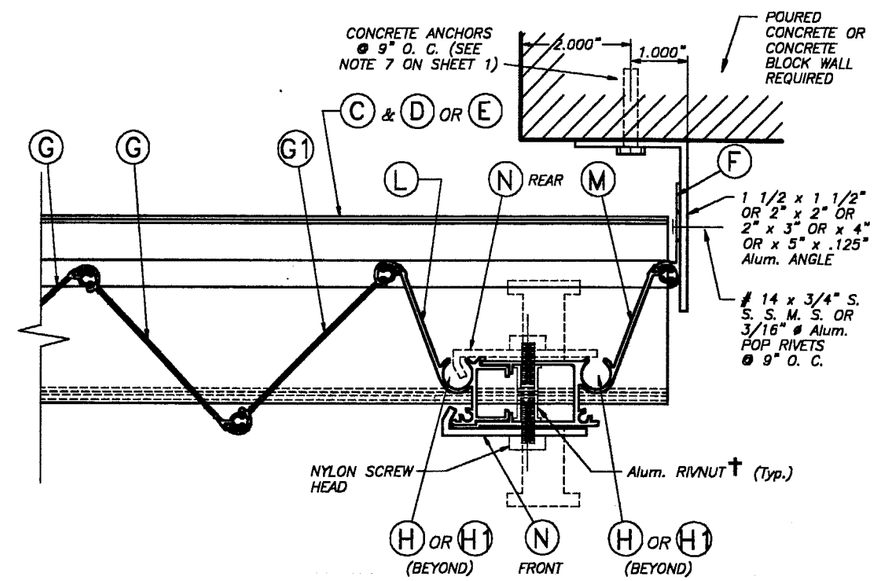

ONE SIDED SHUTTER : END CONNECTION DETAIL

SCALE: 3/8" = 1"

APPROVED AS COMPLYING WITH THE SOUTH FLORIDA BUILDING CODE
DATE May 26, 2000
BY Helmy A. Malek
PRODUCT CONTROL DIVISION
BUILDING CODE COMPLIANCE OFFICE
ACCEPTANCE NO. 00-0411.01

MIAMI-DADE COUNTY

TILTECO INC.
TILLIT TESTING & ENGINEERING COMPANY
6595 N.W. 36th. St., Ste. 217, VIRGINIA GARDENS, FLORIDA 33166
Phone : (305)871-1530 . Fax : (305)871-1531
WALTER A. TILLIT Jr., P. E.
FLORIDA Lic. # 44167

ASSA / RESIDENTIAL BERTHA ACCORDION SHUTTER

SANSONE HURRICANE SHUTTERS, INC.
(ASSA # 04)
505 N.E. 27th STREET
POMPANO BEACH, FL 33064

REV. No	DESCRIPTION	DATE	REV. No	DESCRIPTION	DATE
1	–	–	3	–	–
2	–	–	4	–	–

AS SHOWN SCALE
4/11/00 DATE
00 – 140 DRAWING No
SHEET 5 OF 10

MAXIMUM DESIGN PRESSURE RATING "W" (p.s.f.) AND CORRESPONDING MAXIMUM SPAN "L" SCHEDULE.

(VALID FOR SECTIONS A, A1 & C ON SHEETS 2 & 3 OF 10).

NOTE: DESIGN PRESSURE RATING CORRESPONDS ONLY TO NEGATIVE PRESSURE (SUCTION) LOADS, IN ACCORDANCE WITH ASCE 7-88 CRITERIA FOR A GIVEN OPENING.
IF NEGATIVE PRESSURE VALUES COMPLY WITH THE REQUIRED PRESSURE FOR THE OPENING, THE POSITIVE PRESSURE WILL AUTOMATICALLY QUALIFY AND NEED NOT TO BE CHECKED.

MAXIMUM DESIGN LOAD "W" (p.s.f.)	MAXIMUM SHUTTER SPAN "L" (ft.)	MINIMUM SEPARATION "S" TO GLASS (in.)	
		*	**
40.0	12'-1"	3 7/8"	3"
42.5	11'-11"	3 7/8"	3"
45.0	11'-9"	3 7/8"	3"
47.5	11'-7"	3 7/8"	3"
50.0	11'-5"	3 7/8"	3"
52.5	11'-1"	3 7/8"	3"
55.0	10'-10"	3 7/8"	3"
57.5	10'-7"	3 7/8"	3"
60.0	10'-5"	3 7/8"	3"
62.5	10'-2"	3 7/8"	3"
65.0	10'-0"	3 7/8"	3"
67.5	9'-10"	3 7/8"	3"
70.0	9'-7"	3 7/8"	3"
72.5	9'-5"	3 7/8"	3"
75.0	9'-4"	3 7/8"	3"
77.5	9'-2"	3 7/8"	3"
80.0	9'-0"	3 7/8"	3"
82.5	8'-9"	3 7/8"	3"

MAXIMUM DESIGN LOAD "W" (p.s.f.)	MAXIMUM SHUTTER SPAN "L" (ft.)	MINIMUM SEPARATION "S" TO GLASS (in.)	
		*	**
85.0	8'-6"	3 7/8"	3"
87.5	8'-3"	3 7/8"	3"
90.0	8'-0"	3 3/8"	3"
92.5	7'-9"	3 3/8"	3"
95.0	7'-7"	3 3/8"	3"
97.5	7'-5"	3 3/8"	3"
100.0	7'-2"	3 3/8"	3"
102.5	7'-0"	3 3/8"	3"
105.0	6'-10"	3 3/8"	3"
107.5	6'-8"	3 3/8"	3"
110.0	6'-7"	3 3/8"	3"
112.5	6'-5"	3 3/8"	3"
115.0	6'-3"	3 3/8"	3"
117.5	6'-2"	3 3/8"	3"
120.0	6'-0"	3 3/8"	3"
122.5	5'-11"	3 3/8"	3"
125.0	5'-9"	3 3/8"	3"
127.5	5'-8"	3 3/8"	3"
130.0	5'-6"	3 3/8"	3"
132.5	5'-5"	3 3/8"	3"
135.0	5'-4"	3 3/8"	3"
137.5	5'-3"	3 3/8"	3"

MAXIMUM DESIGN LOAD "W" (p.s.f.)	MAXIMUM SHUTTER SPAN "L" (ft.)	MINIMUM SEPARATION "S" TO GLASS (in.)	
		*	**
140.0	5'-2"	3 3/8"	3"
142.5	5'-1"	3 3/8"	3"
145.0	5'-0"	3 3/8"	3"
147.5	4'-11"	3 3/8"	3"
150.0	4'-10"	3 3/8"	3"
152.5	4'-9"	3 3/8"	3"
155.0	4'-8"	3 3/8"	3"
157.5	4'-7"	3 3/8"	3"
160.0	4'-6"	3 3/8"	3"
162.5	4'-5"	3 3/8"	3"
165.0	4'-4"	3 3/8"	3"
167.5	4'-4"	3 3/8"	3"
170.0	4'-3"	3 3/8"	3"
172.5	4'-2"	3 3/8"	3"
175.0	4'-1"	3 3/8"	3"
177.5	4'-1"	3 3/8"	3"
180.0	4'-0"	3 3/8"	3"

TABLE 1:

MINIMUM SEPARATION "S" BETWEEN GLASS AND SHUTTER FOR A GIVEN SHUTTER SPAN "L" FOR SHUTTERS INSTALLED WITHIN THE FIRST 30'-0" ABOVE GRADE OF A GIVEN BUILDING. 30'-0" ELEVATION SHALL BE MEASURED AT BOTTOM OF SHUTTER SEPARATION "S" TO BE MEASURED AS INDICATED ON SECTION D, SHEET 4 OF 10.

SHUTTER SPAN "L" (ft.)	MINIMUM SEPARATION "S"
LEES OR EQUAL THAN 8'-0"	3 3/8"
>8'-0" TO 12'-0"	3 7/8"

APPROVED AS COMPLYING WITH THE
SOUTH FLORIDA BUILDING CODE
DATE May 26, 2000
BY [signature]
PRODUCT CONTROL DIVISION
BUILDING CODE COMPLIANCE OFFICE
ACCEPTANCE NO. 00-0411.01

MIAMI-DADE COUNTY

* FOR SHUTTERS INSTALLED WITHING THE FIRST 30'-0" ELEVATION OF BUILDING. SEE TABLE 1 FOR MINIMUM SEPARATION TO GLASS FOR SPANS SHORTER THAN THE MAXIMUM ALLOWED SHOWN ON SCHEDULE.

** FOR SHUTTERS INSTALLED ABOVE 30'-0" ELEVATION OF BUILDING, MEASURED AT BOTTOM OF SHUTTER

[signature]
4/13/00

TILTECO INC.
TILLIT TESTING & ENGINEERING COMPANY
6595 N.W. 36th. St., Ste. 217, VIRGINIA GARDENS, FLORIDA 33166
Phone : (305)871-1530 . Fax : (305)871-1531
WALTER A. TILLIT Jr., P. E.
FLORIDA Lic. # 44167

ASSA / RESIDENTIAL BERTHA ACCORDION SHUTTER

SANSONE HURRICANE SHUTTERS, INC.
(ASSA # 04)
505 N.E. 27th STREET
POMPANO BEACH, FL 33064

REV. No	DESCRIPTION	DATE	REV. No	DESCRIPTION	DATE
1	–	–	3	–	–
2	–	–	4	–	–

AS SHOWN
SCALE

4/11/00
DATE

00 – 140
DRAWING No

SHEET 6 OF 10

MAXIMUM DESIGN PRESSURE RATING "W" (p.s.f.) AND CORRESPONDING MAXIMUM SPAN "L" SCHEDULE.

(VALID FOR SECTION B & B1 ON SHEET 2 OF 10).

NOTE: DESIGN PRESSURE RATING CORRESPONDS ONLY TO NEGATIVE PRESSURE (SUCTION) LOADS, IN ACCORDANCE WITH ASCE 7-88 CRITERIA FOR A GIVEN OPENING. IF NEGATIVE PRESSURE VALUES COMPLY WITH THE REQUIRED PRESSURE FOR THE OPENING, THE POSITIVE PRESSURE WILL AUTOMATICALLY QUALIFY AND NEED NOT TO BE CHECKED.

MAXIMUM DESIGN LOAD "W" (p.s.f.)	MAXIMUM SHUTTER SPAN "L" (ft.)	MINIMUM SEPARATION "S" TO GLASS (in.)	
		*	**
40.0	12'-0"	3 7/8"	3"
42.5	11'-11"	3 7/8"	3"
45.0	11'-9"	3 7/8"	3"
47.5	11'-7"	3 7/8"	3"
50.0	11'-5"	3 7/8"	3"
52.5	11'-3"	3 7/8"	3"
55.0	11'-1"	3 7/8"	3"
57.5	10'-10"	3 7/8"	3"
60.0	10'-7"	3 7/8"	3"
62.5	10'-4"	3 7/8"	3"
65.0	10'-2"	3 7/8"	3"
67.5	10'-0"	3 7/8"	3"
70.0	9'-10"	3 7/8"	3"
72.5	9'-8"	3 7/8"	3"
75.0	9'-6"	3 7/8"	3"
77.5	9'-4"	3 7/8"	3"
80.0	9'-2"	3 7/8"	3"
82.5	9'-0"	3 7/8"	3"

MAXIMUM DESIGN LOAD "W" (p.s.f.)	MAXIMUM SHUTTER SPAN "L" (ft.)	MINIMUM SEPARATION "S" TO GLASS (in.)	
		*	**
85.0	8'-11"	3 7/8"	3"
87.5	8'-9"	3 7/8"	3"
90.0	8'-5"	3 7/8"	3"
92.5	8'-3"	3 7/8"	3"
95.0	8'-1"	3 7/8"	3"
97.5	7'-10"	3 3/8"	3"
100.0	7'-8"	3 3/8"	3"
102.5	7'-6"	3 3/8"	3"
105.0	7'-3"	3 3/8"	3"
107.5	7'-1"	3 3/8"	3"
110.0	6'-11"	3 3/8"	3"
112.5	6'-10"	3 3/8"	3"
115.0	6'-8"	3 3/8"	3"
117.5	6'-6"	3 3/8"	3"
120.0	6'-5"	3 3/8"	3"
122.5	6'-3"	3 3/8"	3"
125.0	6'-1"	3 3/8"	3"
127.5	6'-0"	3 3/8"	3"
130.0	5'-11"	3 3/8"	3"
132.5	5'-9"	3 3/8"	3"
135.0	5'-8"	3 3/8"	3"
137.5	5'-7"	3 3/8"	3"

MAXIMUM DESIGN LOAD "W" (p.s.f.)	MAXIMUM SHUTTER SPAN "L" (ft.)	MINIMUM SEPARATION "S" TO GLASS (in.)	
		*	**
140.0	5'-6"	3 3/8"	3"
142.5	5'-4"	3 3/8"	3"
145.0	5'-3"	3 3/8"	3"
147.5	5'-2"	3 3/8"	3"
150.0	5'-1"	3 3/8"	3"
152.5	5'-0"	3 3/8"	3"
155.0	4'-11"	3 3/8"	3"
157.5	4'-10"	3 3/8"	3"
160.0	4'-9"	3 3/8"	3"
162.5	4'-8"	3 3/8"	3"
165.0	4'-8"	3 3/8"	3"
167.5	4'-7"	3 3/8"	3"
170.0	4'-6"	3 3/8"	3"
172.5	4'-5"	3 3/8"	3"
175.0	4'-4"	3 3/8"	3"
177.5	4'-4"	3 3/8"	3"
180.0	4'-3"	3 3/8"	3"

TABLE 1:

MINIMUM SEPARATION "S" BETWEEN GLASS AND SHUTTER FOR A GIVEN SHUTTER SPAN "L" FOR SHUTTERS INSTALLED WITHIN THE FIRST 30'-0" ABOVE GRADE OF A GIVEN BUILDING. 30'-0" ELEVATION SHALL BE MEASURED AT BOTTOM OF SHUTTER SEPARATION "S" TO BE MEASURED AS INDICATED ON SECTION D, SHEET 4 OF 10.

SHUTTER SPAN "L" (ft.)	MINIMUM SEPARATION "S"
LEES OR EQUAL THAN 8'-0"	3 3/8"
>8'-0" TO 12'-0"	3 7/8"

APPROVED AS COMPLYING WITH THE
SOUTH FLORIDA BUILDING CODE
DATE May 26, 2000
BY Helmy H. Mahr
PRODUCT CONTROL DIVISION
BUILDING CODE COMPLIANCE OFFICE
ACCEPTANCE NO. 00-0411.01

* FOR SHUTTERS INSTALLED WITHING THE FIRST 30'-0" ELEVATION OF BUILDING. SEE TABLE 1 FOR MINIMUM SEPARATION TO GLASS FOR SPANS SHORTER THAN THE MAXIMUM ALLOWED SHOWN ON SCHEDULE.

** FOR SHUTTERS INSTALLED ABOVE 30'-0" ELEVATION OF BUILDING, MEASURED AT BOTTOM OF SHUTTER

4/13/00

MIAMI-DADE COUNTY

TILTECO INC.
TILLIT TESTING & ENGINEERING COMPANY
6565 N.W. 36th. St., Ste. 217, VIRGINIA GARDENS, FLORIDA 33166
Phone : (305)871-1530 . Fax : (305)871-1531
WALTER A. TILLIT Jr., P. E.
FLORIDA Lic. # 44167

ASSA / RESIDENTIAL BERTHA ACCORDION SHUTTER

SANSONE HURRICANE SHUTTERS, INC.
(ASSA # 04)
505 N.E. 27th STREET
POMPANO BEACH, FL 33064

REV. No	DESCRIPTION	DATE	REV. No	DESCRIPTION	DATE
1	-	-	3	-	-
2	-	-	4	-	-

AS SHOWN
SCALE

4/11/00
DATE

00 - 140
DRAWING No

SHEET 7 OF 10

MAXIMUM DESIGN PRESSURE RATING "W" (p.s.f.) AND CORRESPONDING MAXIMUM ANCHOR SPACING (In.) SCHEDULE. +

MAXIMUM DESIGN LOAD "W" (p.s.f.)	SECTIONS A, A1, C — WALL MOUNTING INSTALLATION AT TOP OR BOTTOM (TO CONCRETE)			SECTIONS A, A1, C — WALL MOUNTING INSTALLATION AT TOP OR BOTTOM (TO MASONRY & CONCRETE)			SECTIONS B, & B1 — CEILING & FLOOR MOUNTING INSTALLATION AT TOP OR BOTTOM (TO CONCRETE)		
	NOTE 1	NOTE 2	NOTE 3	NOTE 1	NOTE 2	NOTE 3	NOTE 1	NOTE 2	NOTE 3
FROM 40.0 TO 62.5	12"	11"	9"	12"	8"	6 1/2"	12"	7"	5 1/2"
	12"	12"	12"	9 1/2"	5 1/2"	4 1/2"	12"	11"	9"
FROM 62.6 TO 75.0	12"	9"	8"	11 1/2"	6 1/2"	6"	10"	6"	5"
	12"	12"	11 1/2"	8"	4 1/2"	4"	12"	9"	8"
FROM 75.1 TO 92.5	12"	7"	7"	9"	5 1/2"	5 1/2"	8"	5"	–
	12"	10"	10"	6 1/2"	4"	4"	12"	7 1/2"	7 1/2"
FROM 92.6 TO 120.0	9 1/2"	7"	–	7"	5 1/2"	–	6"	5"	–
	12"	10"	–	5"	4"	–	9 1/2"	7 1/2"	–
FROM 120.1 TO 180.0	7"	7"	–	5 1/2"	5 1/2"	–	5"	5"	–
	10"	10"	–	4"	4"	–	7 1/2"	7 1/2"	–

ANCHOR SPACING LEGEND

(1) Max. ANCHOR SPCG. VALID FOR SPANS OF 5'–0" OR LESS.
(2) Max. ANCHOR SPCG. VALID FOR SPANS GREATER THAN 5'–0" TO 8'–6".
(3) Max. ANCHOR SPCG. VALID FOR SPANS GREATER THAN 8'–6" TO Max. ALLOWED.

ZAMAC NAILIN
TAPCON OR RAWL CALK–IN

ANCHOR SPACING LEGEND

NOTES ON ANCHOR SPACING SCHEDULE

\+ SEE SHEETS 9 & 10 OF 10 FOR ANCHORS TYPE & SPACING FOR INSTALLATIONS INTO WOOD FRAME BUILDINGS.
MAXIMUM ANCHOR SPACINGS ARE VALID FOR 3 1/2" EDGE DISTANCE. FOR E. D. LESS THAN 3 1/2", REDUCE ANCHOR SPACING BY MULTIPLYING SPACINGS SHOWN ON SCHEDULE BY THE FOLLOWING FACTORS. (Min. E. D. FOR RAWL CALK–IN IS 2 1/2").

ACTUAL E. D.= EDGE DISTANCE	FACTOR	
	TAPCON / ZAMAC NAILIN	RAWL CALK–IN
3"	.86	.75
2 1/2"	.71	.50
2"	.50	–

6/13/00

APPROVED AS COMPLYING WITH THE SOUTH FLORIDA BUILDING CODE
DATE May 26, 2000
BY Helmut A. Moller
PRODUCT CONTROL DIVISION
BUILDING CODE COMPLIANCE OFFICE
ACCEPTANCE NO. 00-0411.01

MIAMI–DADE COUNTY

TILTECO INC.
TILLIT TESTING & ENGINEERING COMPANY
6595 N.W. 36th. St., Ste. 217, VIRGINIA GARDENS, FLORIDA 33166
Phone : (305)871–1530 . Fax : (305)871–1531
WALTER A. TILLIT Jr., P. E.
FLORIDA Lic. # 44167

ASSA / RESIDENTIAL BERTHA ACCORDION SHUTTER

SANSONE HURRICANE SHUTTERS, INC.
(ASSA # 04)
505 N.E. 27th STREET
POMPANO BEACH, FL 33064

REV. No	DESCRIPTION	DATE	REV. No	DESCRIPTION	DATE
1	–	–	3	–	–
2	–	–	4	–	–

AS SHOWN SCALE
4/11/00 DATE
00 – 140 DRAWING No
SHEET 8 OF 10

INSTALLATION DETAILS ON EXISTING WOOD BUILDINGS

NOTES :

1. INSTALLATIONS ARE ONLY VALID FOR INSTALLATIONS WITH DESIGN WIND LOADS LESS OR EQUAL THAN 75 p.s.f. AND 9'-0" Max. SHUTTER SPAN.
2. FOR NEW WOOD FRAME CONSTRUCTION: WOOD MEMBERS TO BE SOUTHERN PINE No. 2, W/ SPECIFIC DENSITY OF 0.55 OR EQUAL.

NOTE FOR COMBINATION OF SECTIONS :

WALL/FLOOR/CEILING MOUNTING SECTIONS CAN BE COMBINED IN ANY WAY TO SUIT ANY INSTALLATION.

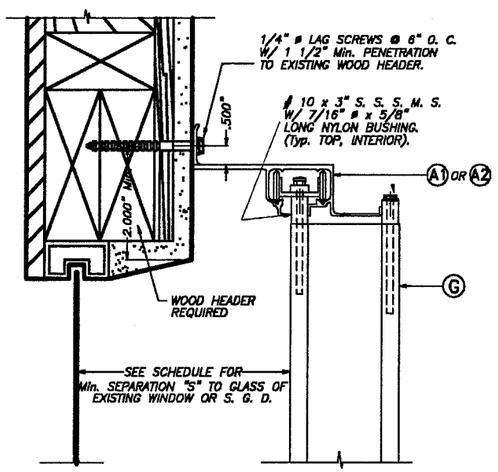

ALTERNATIVE 1

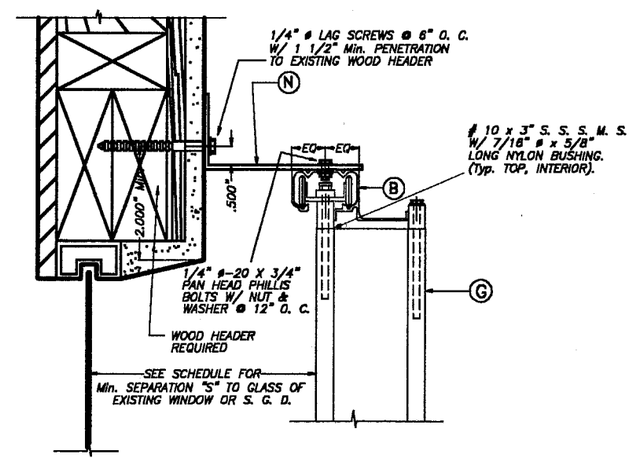

ALTERNATIVE 2

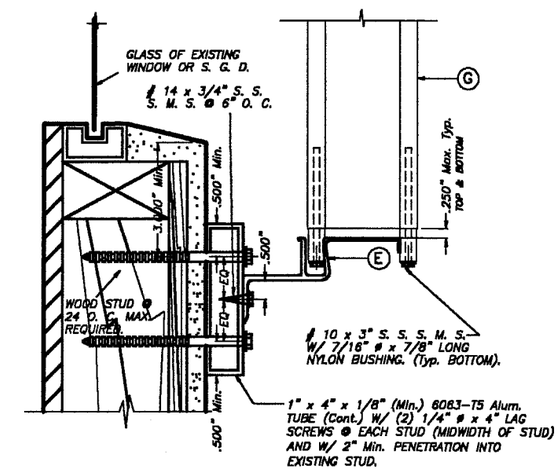

ALTERNATIVE 3

APPROVED AS COMPLYING WITH THE
SOUTH FLORIDA BUILDING CODE
DATE May 26, 2000
BY Helmy A. Mahr
PRODUCT CONTROL DIVISION
BUILDING CODE COMPLIANCE OFFICE
ACCEPTANCE NO. 00-0411.01

WALL MOUNTING INSTALLATION – SECTIONS A

SCALE: 1/4" = 1"

MIAMI–DADE COUNTY

4/13/00

TILTECO INC.
TILLIT TESTING & ENGINEERING COMPANY
6595 N.W. 36th. St., Ste. 217, VIRGINIA GARDENS, FLORIDA 33166
Phone : (305)871-1530 . Fax : (305)871-1531

WALTER A. TILLIT Jr., P. E.
FLORIDA Lic. # 44167

ASSA / RESIDENTIAL BERTHA ACCORDION SHUTTER

SANSONE HURRICANE SHUTTERS, INC.
(ASSA # 04)
505 N.E. 27th STREET
POMPANO BEACH, FL 33064

REV. No	DESCRIPTION	DATE	REV. No	DESCRIPTION	DATE
1	–	–	3	–	–
2	–	–	4	–	–

AS SHOWN
SCALE

4/11/00
DATE

00 – 140
DRAWING No

SHEET 9 OF 10

INSTALLATION DETAILS ON EXISTING WOOD BUILDINGS

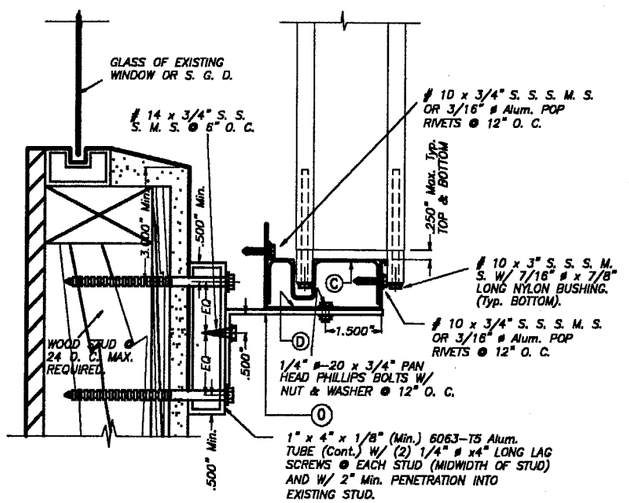

ALTERNATIVE 4

WALL MOUNTING INSTALLATION – SECTION A

SCALE: 1/4" = 1"

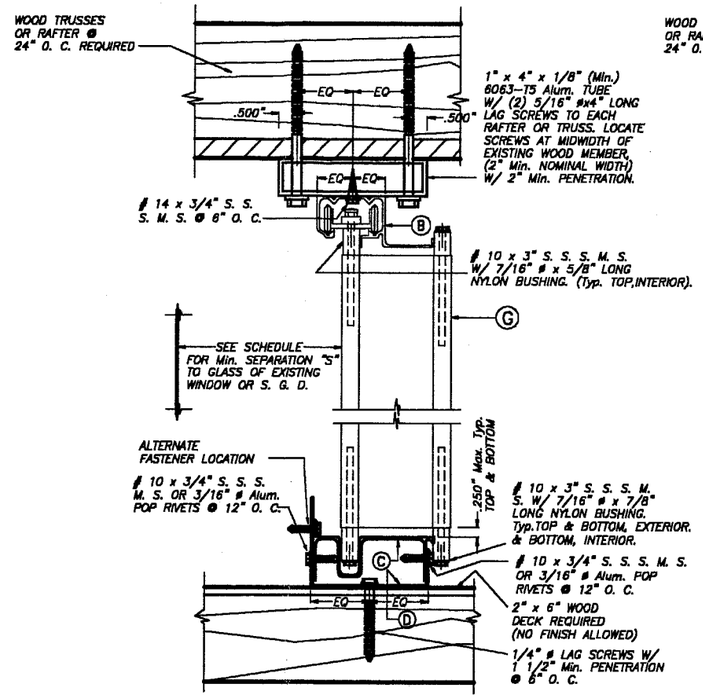

CEILING & FLOOR MOUNTING INSTALLATION – SECTION B

SCALE: 1/4" = 1"

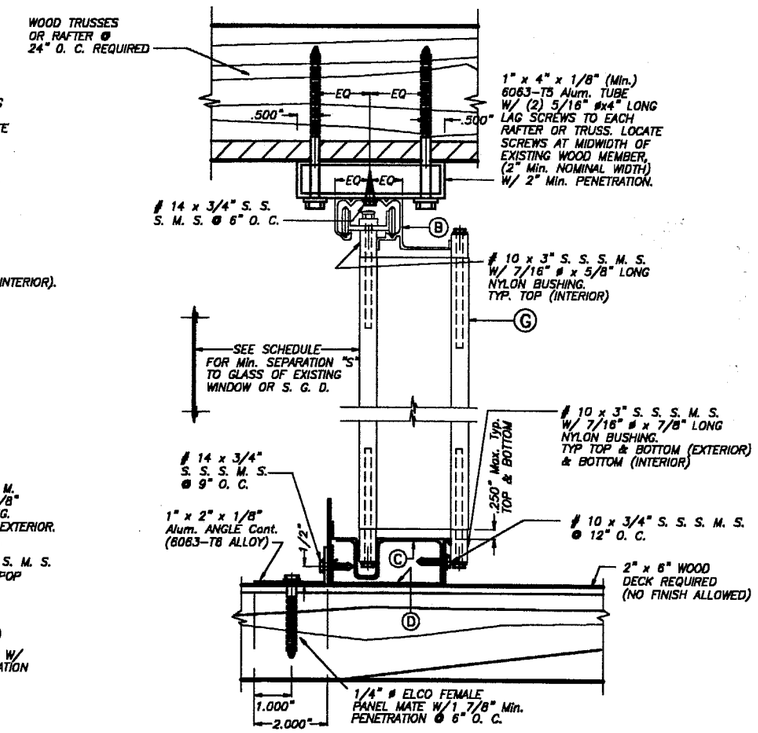

CEILING & FLOOR MOUNTING INSTALLATION – SECTION B1

SCALE: 1/4" = 1"

NOTE :

WALL/FLOOR/CEILING MOUNTING SECTIONS CAN BE COMBINED IN ANY WAY TO SUIT ANY INSTALLATION.

NOTES :

1. INSTALLATIONS ARE ONLY VALID FOR INSTALLATIONS WITH DESIGN WIND LOADS LESS OR EQUAL THAN 75 p.s.f. AND 9'-0" Max. SHUTTER SPAN.
2. FOR NEW WOOD FRAME CONSTRUCTION: WOOD MEMBERS TO BE SOUTHERN PINE No. 2, W/ SPECIFIC DENSITY OF 0.55 OR EQUAL.

APPROVED AS COMPLYING WITH THE SOUTH FLORIDA BUILDING CODE
DATE May 26, 2000
BY [signature]
PRODUCT CONTROL DIVISION
BUILDING CODE COMPLIANCE OFFICE
ACCEPTANCE NO. 00-0411.01

MIAMI-DADE COUNTY

[signature]
4/13/00

TILTECO INC.
TILLIT TESTING & ENGINEERING COMPANY
6595 N.W. 36th. St., Ste. 217, VIRGINIA GARDENS, FLORIDA 33166
Phone : (305)871-1530 . Fax : (305)871-1531
WALTER A. TILLIT Jr., P. E.
FLORIDA Lic. # 44167

ASSA / RESIDENTIAL BERTHA ACCORDION SHUTTER

SANSONE HURRICANE SHUTTERS, INC.
(ASSA # 04)
505 N.E. 27th STREET
POMPANO BEACH, FL 33064

REV. No	DESCRIPTION	DATE	REV. No	DESCRIPTION	DATE
1	–	–	3	–	–
2	–	–	4	–	–

AS SHOWN
SCALE

4/11/00
DATE

00 – 140
DRAWING No

SHEET 10 OF 10