MIAMI-DADE

MIAMI-DADE COUNTY, FLORIDA
METRO-DADE FLAGLER BUILDING

BUILDING CODE COMPLIANCE OFFICE
METRO-DADE FLAGLER BUILDING
140 WEST FLAGLER STREET, SUITE 1603
MIAMI, FLORIDA 33130-1563
(305) 375-2901 FAX (305) 375-2908

CONTRACTOR LICENSING SECTION
(305) 375-2527 FAX (305) 375-2558

CONTRACTOR ENFORCEMENT DIVISION
(305) 375-2966 FAX (305) 375-2908

PRODUCT CONTROL DIVISION
(305) 375-2902 FAX (305) 372-6339

PRODUCT CONTROL NOTICE OF ACCEPTANCE

Florida Shutters, Inc.
1125 Commerce Ave.
Vero Beach ,FL 32960

Your application for Notice of Acceptance (NOA) of:
Impact Aluminum Bahama Shutter
under Chapter 8 of the Code of Miami-Dade County governing the use of Alternate Materials and Types of Construction, and completely described herein, has been recommended for acceptance by the Miami-Dade County Building Code Compliance Office (BCCO) under the conditions specified herein.

This NOA shall not be valid after the expiration date stated below. BCCO reserves the right to secure this product or material at any time from a jobsite or manufacturer's plant for quality control testing. If this product or material fails to perform in the approved manner, BCCO may revoke, modify, or suspend the use of such product or material immediately. BCCO reserves the right to revoke this approval, if it is determined by BCCO that this product or material fails to meet the requirements of the South Florida Building Code.

The expense of such testing will be incurred by the manufacturer.

ACCEPTANCE NO.: 00-0411.08
EXPIRES: 03/08/2004

Raul Rodriguez
Chief Product Control Division

THIS IS THE COVERSHEET, SEE ADDITIONAL PAGES FOR SPECIFIC AND GENERAL CONDITIONS
BUILDING CODE & PRODUCT REVIEW COMMITTEE

This application for Product Approval has been reviewed by the BCCO and approved by the Building Code and Product Review Committee to be used in Miami-Dade County, Florida under the conditions set forth above.

Francisco J. Quintana, R.A.
Director
Miami-Dade County
Building Code Compliance Office

APPROVED: 03/08/2001

Florida Shutters, Inc.

ACCEPTANCE No. : 00-0411.08

APPROVED : 03/08/2001

EXPIRES : 03/08/2004

NOTICE OF ACCEPTANCE: SPECIFIC CONDITIONS

1. SCOPE

This approves an Extruded Aluminum Bahama Shutter, as described in Section 2 of this Notice of Acceptance, designed to comply with the South Florida Building Code, 1994 Edition for Miami-Dade County, for the locations where the pressure requirements, as determined by SFBC Chapter 23, do not exceed the Design Pressure Rating values indicated in the approved drawings.

2. PRODUCT DESCRIPTION

This Extruded Aluminum Bahama Shutter and its components shall be constructed in strict compliance with the following documents: Drawing No. 1001A, titled " Impact Bahama Shutter ", prepared by W. W. Schaefer Engineering & Consulting, P.A., signed and sealed by Warren W. Schaefer, P.E., dated November 17, 2000, sheets 1 through 10 of 10, bearing the Miami-Dade County Product Control Approval stamp with the Notice of Acceptance number and approval date by the Miami-Dade County Product Control Division. These documents shall hereinafter be referred to as the approved drawings.

3. LIMITATIONS

All permanent set components, included but not limited to embedded anchor bolts, threaded cones, metal shields, must be protected against corrosion, contamination and damage at all times.

4. INSTALLATION

This Extruded Aluminum Bahama Shutter and its components shall be installed in strict compliance with the approved drawings.

5. LABELING

Each panel shall bear a permanent label with the manufacturer's name or logo, city, state and the following statement: "Miami-Dade County Product Control Approved".

6. BUILDING PERMIT REQUIREMENTS

6.1 Application for building permit shall be accompanied by copies of the following:

6.1.1 This Notice of Acceptance.

6.1.2 Duplicate copies of the approved drawings, as identified in Section 2 of this Notice of Acceptance, clearly marked to show the components selected for the proposed installation.

6.1.3 Any other documents required by the Building Official or the South Florida Building Code (SFBC) in order to properly evaluate the installation of this system.

Helmy A. Makar

Helmy A. Makar, P.E.- Product Control Examiner
Product Control Division

Florida Shutters, Inc.

ACCEPTANCE No. : 00-0411.08

APPROVED : 03/08/2001

EXPIRES : 03/08/2004

NOTICE OF ACCEPTANCE: STANDARD CONDITIONS

1 Renewal of this Acceptance (approval) shall be considered after a renewal application has been filed and the original submitted documents, including test-supporting data, engineering documents, are no older than eight (8) years.

2. Any and all approved products shall be permanently labeled with the manufacturer's name, city, state, and the following statement: "Miami-Dade County Product Control Approved", or as specifically stated in the specific conditions of this Acceptance.

3. Renewals of Acceptance will not be considered if:
   a. There has been a change in the South Florida Building Code affecting the evaluation of this product and the product is not in compliance with the code changes.
   b. The product is no longer the same product (identical) as the one originally approved.
   c. If the Acceptance holder has not complied with all the requirements of this acceptance, including the correct installation of the product.
   d. The engineer, who originally prepared, signed and sealed the required documentation initially submitted, is no longer practicing the engineering profession.

4. Any revision or change in the materials, use, and/or manufacture of the product or process shall automatically be cause for termination of this Acceptance, unless prior written approval has been requested (through the filing of a revision application with appropriate fee) and granted by this office.

5. Any of the following shall also be grounds for removal of this Acceptance:
   a. Unsatisfactory performance of this product or process.
   b. Misuse of this Acceptance as an endorsement of any product, for sales, advertising or any other purposes.

6. The Notice of Acceptance number preceded by the words Miami-Dade County, Florida, and followed by the expiration date may be displayed in advertising literature. If any portion of the Notice of Acceptance is displayed, then it shall be done in its entirety.

7. A copy of this Acceptance as well as approved drawings and other documents, where it applies, shall be provided to the user by the manufacturer or its distributors and shall be available for inspection at the job site at all time. The engineer needs not reseal the copies.

8. Failure to comply with any section of this Acceptance shall be cause for termination and removal of Acceptance.

9. This Notice of Acceptance consists of pages 1, 2 and this last page 3.

END OF THIS ACCEPTANCE

Helmy A. Makar, P.E.- Product Control Examiner
Product Control Division

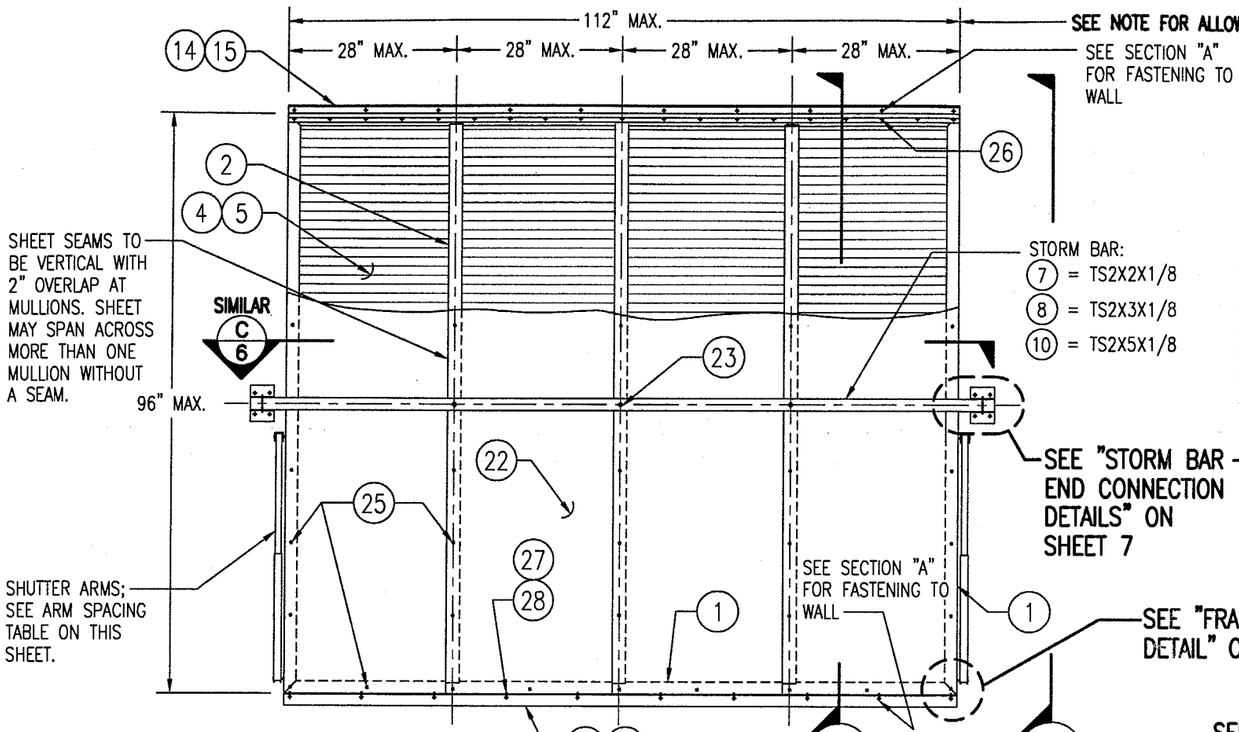

SEE SHEETS 9 & 10 FOR SPACING REQUIREMENTS OF STORM BARS FOR SINGLE & MULTIPLE BAR SHUTTERS.

EXTERIOR ELEVATION QUAD PANEL SHUTTER

SCALE: 1/2"=1'-0"

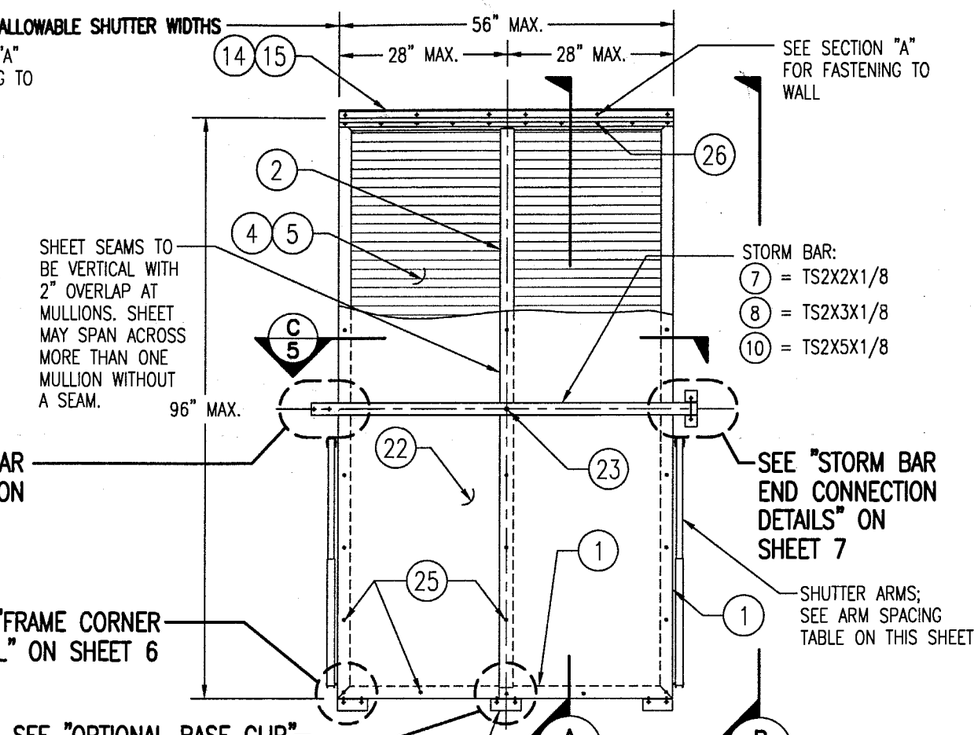

EXTERIOR ELEVATION DOUBLE PANEL SHUTTER

SCALE: 1/2"=1'-0"

MAX. ALLOWABLE DESIGN WIND LOADS	
POSITIVE	NEGATIVE
80 PSF	80 PSF
SEE SHUTTER & STORM BAR TABLES ON SHEETS 9 & 10 FOR REDUCED LOADS AS CONTROLLED BY SHUTTER SPAN, STORM BAR SPAN & STORM BAR SPACING.	

ARM SPACING TABLE	
SHUTTER HEIGHT	MAXIMUM SPACING
48" OR LESS	56"
49" < h < 60"	45"
61" < h < 72"	38"
73" < h < 84"	32"
85" < h < 96"	28"
VALUES IN THIS TABLE ARE BASED ON PRESSURES RESULTING FROM WIND SPEEDS UP TO 75 MPH	

NOTE: THE NUMBER OF PANELS IS GOVERNED BY:

1. IF STORM BARS ARE REQUIRED, ANY NUMBER OF PANELS MAY BE USED PROVIDING THE OVERALL SHUTTER WIDTH DOES NOT EXCEED 112" & THE PANEL WIDTHS DO NOT EXCEED 28".

2. IF NO STORM BARS ARE REQUIRED, ANY NUMBER OF PANELS MAY BE USED & THE SHUTTER OVERALL WIDTH MAY BE INFINATE PROVIDING THE PANEL WIDTHS DO NOT EXCEED 28".

STORM BAR NOTE: THE NUMBER OF STORM BARS REQUIRED WITH EACH SHUTTER TYPICALLY VARIES FROM 1 TO 3 & IS DEPENDENT ON SHUTTER SIZE & REQUIRED DESIGN PRESSURE. SEE ELEVATION SKETCHES & LOAD TABLES ON SHEETS 9 & 10 FOR STORM BAR REQUIREMENTS.

NOTE: ALL 2 PANEL SHUTTERS REQUIRE JUST 1 ARM AT EACH SIDE!!

APPROVED AS COMPLYING WITH THE SOUTH FLORIDA BUILDING CODE
DATE 03/08/2001
BY Helmy A. Meler
PRODUCT CONTROL DIVISION
BUILDING CODE COMPLIANCE OFFICE
ACCEPTANCE NO. 00-0411.08

GENERAL NOTES:

1. ALL ALUMINUM EXTRUSIONS SHALL BE 6063-T5 ALLOY UNLESS SHOWN OTHERWISE ON THESE DRAWINGS.
2. IT SHALL BE THE RESPONSIBILITY OF THE PERMIT HOLDER TO VERIFY THE STRUCTURAL INTEGRITY OF THE EXISTING STRUCTURE TO SUPPORT THE LOADS SUPERIMPOSED BY THE SHUTTERS.
3. THESE SHUTTER SYSTEMS ARE DESIGNED TO WITHSTAND WIND PRESSURES, IN THE OPEN POSITION, RESULTING FROM WIND SPEEDS UP TO 75 MPH IN ACCORDANCE WITH THE SOUTH FLORIDA BUILDING CODE 1994 EDITION.
4. THESE SHUTTER SYSTEMS HAVE BEEN DESIGNED & TESTED IN ACCORDANCE WITH THE SOUTH FLORIDA BUILDING CODE 1994 EDITION AND MIAMI-DADE COUNTY PROTOCALS PA-201, 202 & 203.
5. EACH SHUTTER SHALL HAVE A LEGABLE & READILY VISIBLE MARKING INSTRUCTING THE OWNER/TENNANT TO SECURE THE SHUTTER WITH BRACKETS & STORM BARS, PER THESE APPROVED DRAWINGS DURING PERIODS OF HURRICANE WARNINGS.
6. EACH SHUTTER ASSEMBLY SHALL BE PERMANENTLY LABELED AS FOLLOWS:
   FLORIDA SHUTTERS, INC.
   VERO BEACH, FLORIDA
   MIAMI-DADE COUNTY PRODUCT CONTROL APPROVED
7. ALL CONCRETE SUBSTRATE SHALL BE MIN. 3000 PSI.
8. ALL WOOD SUBSTRATE SHALL BE MIN. G = 0.55 DENSITY.

DRAWN BY: W.W.S.	CHECKED BY: W.W.S.
PLOT: 1=24	DATE: 11/17/00

NO.	REVISION DESCRIPTION	BY	DATE

(DADE)

DRAWING TITLE: IMPACT BAHAMA SHUTTERS

MANUFACTURER: FLORIDA SHUTTERS, INC.
1125 COMMERCE AVENUE
VERO BEACH, FL 32960
(561)569-2200

CONSULTANTS: W. W. SCHAEFER ENGINEERING & CONSULTING, P.A.
600 SANDTREE DRIVE; SUITE 203B
PALM BEACH GARDENS, FL 33403
PHONE: 561-775-4902 FAX: 561-775-4903

CERTIFICATION
NOV 20 2000
WARREN W. SCHAEFER, P.E.
P.E. NO. 44135

DRAWING NO. 1001A REV.

SHEET NO. 1 OF 10

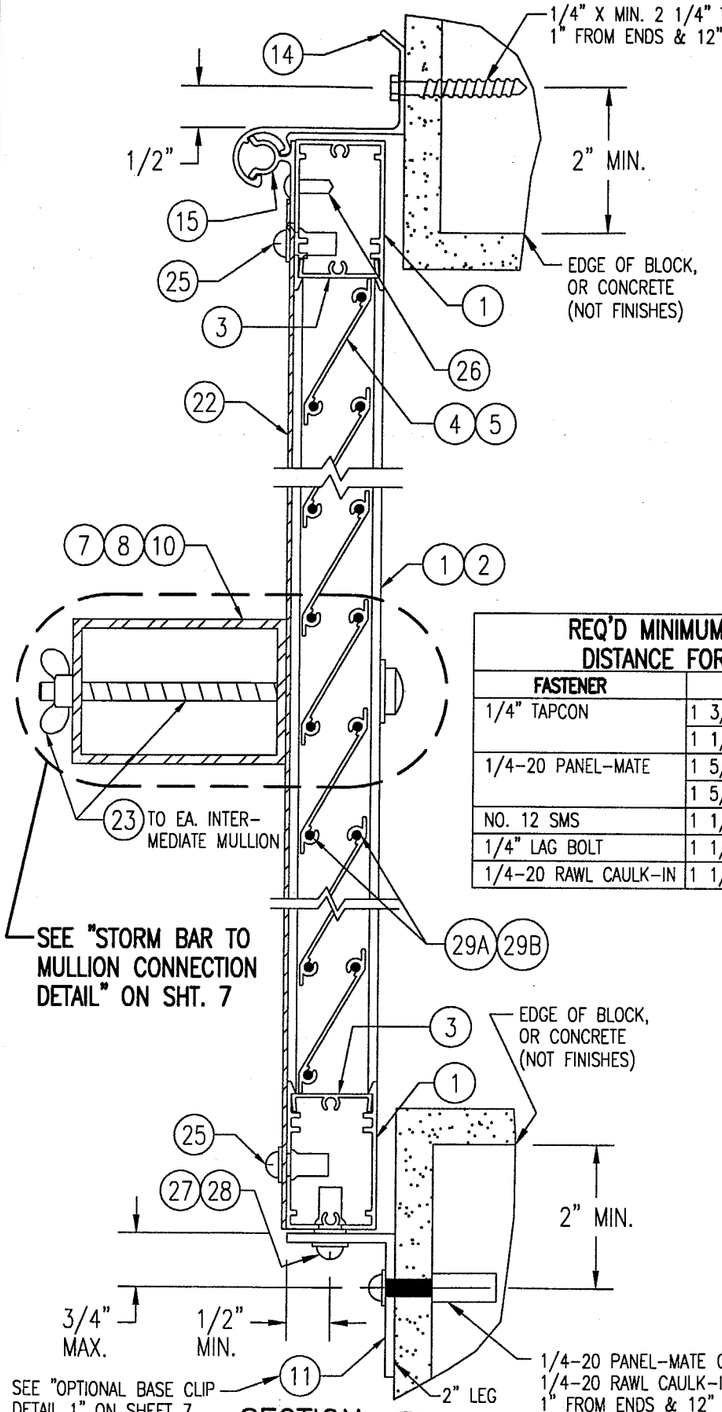

SECTION A/2
SCALE: 1/2 FULL
(FACE MOUNT ONTO BLOCK/CONCRETE)

REQ'D MINIMUM EMBEDMENTS & EDGE DISTANCE FOR OPENING FASTENERS		
FASTENER	EMBEDMENT	EDGE DISTANCE
1/4" TAPCON	1 3/4" INTO BLOCK/CONCR.	SEE DETAILS
	1 1/2" INTO WOOD FRAMING	3/4"
1/4-20 PANEL-MATE	1 5/8" INTO BLOCK/CONCR.	SEE DETAILS
	1 5/8" INTO WOOD FRAMING	3/4"
NO. 12 SMS	1 1/2" INTO WOOD FRAMING	3/4"
1/4" LAG BOLT	1 1/2" INTO WOOD FRAMING	3/4"
1/4-20 RAWL CAULK-IN	1 1/2" INTO BLOCK/CONCR.	SEE DETAILS

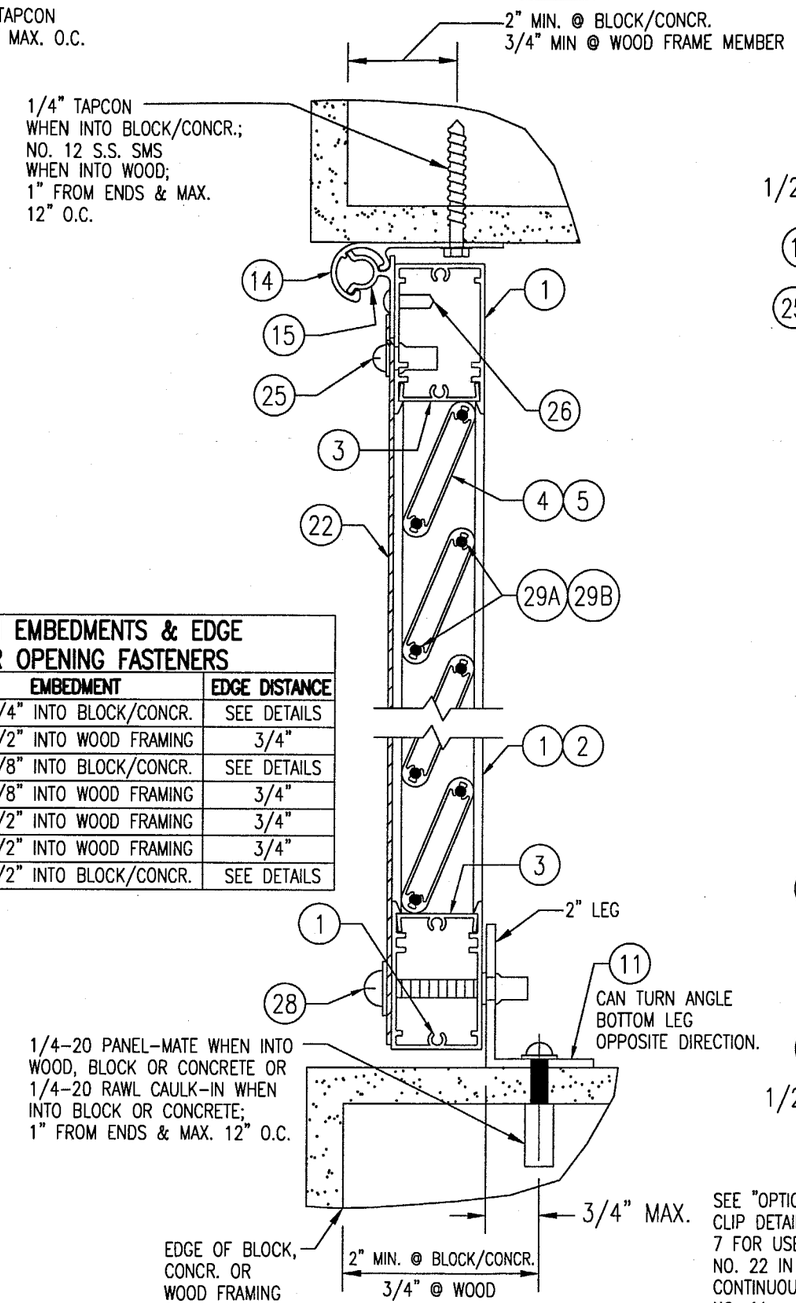

SECTION A/2
SCALE: 1/2 FULL
(RECESS MOUNT ONTO BLOCK, CONCRETE OR WOOD FRAME)

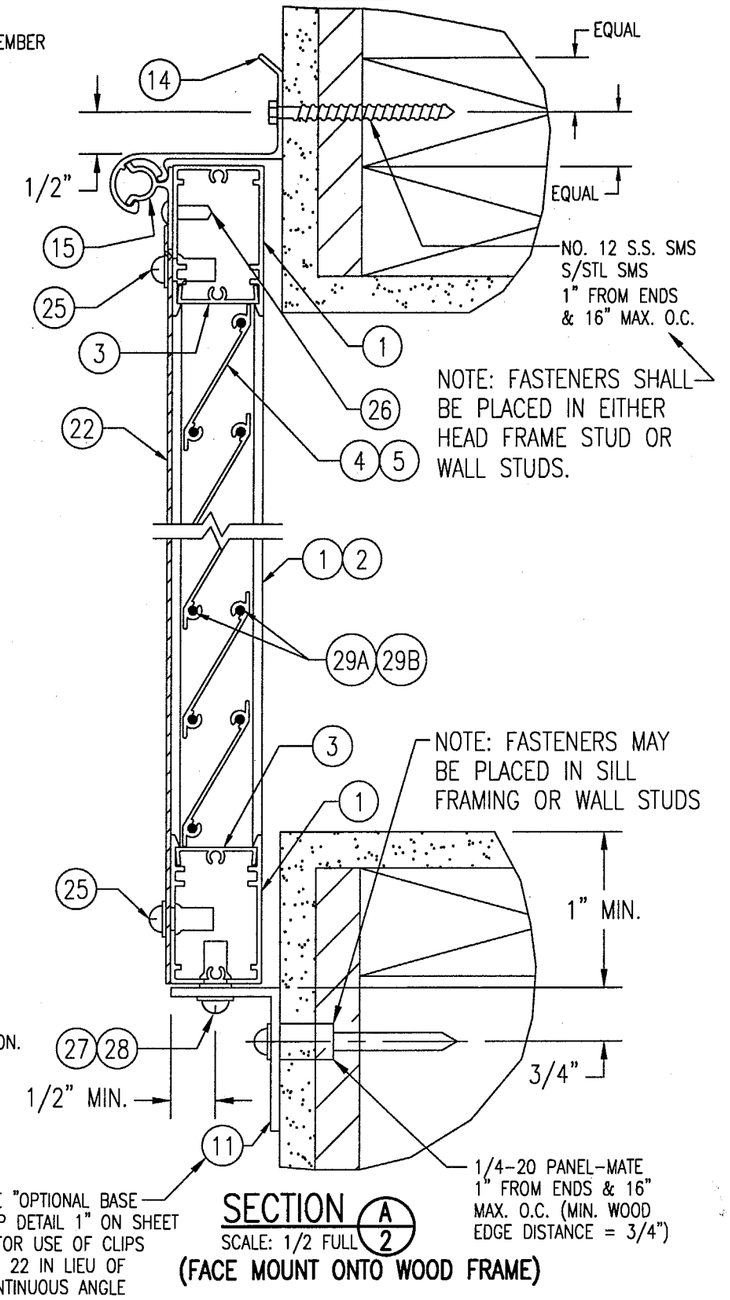

SECTION A/2
SCALE: 1/2 FULL
(FACE MOUNT ONTO WOOD FRAME)

APPROVED AS COMPLYING WITH THE
SOUTH FLORIDA BUILDING CODE
DATE 03/08/2001
BY Henry H. Walker
PRODUCT CONTROL DIVISION
BUILDING CODE COMPLIANCE OFFICE
ACCEPTANCE NO. 00-0411.08

DRAWN BY: W.W.S.	CHECKED BY: W.W.S.
PLOT: 1=2	DATE: 11/17/00

NO.	REVISION DESCRIPTION	BY	DATE

DRAWING TITLE
IMPACT BAHAMA SHUTTERS
(DADE)

MANUFACTURER
FLORIDA SHUTTERS, INC.
1125 COMMERCE AVENUE
VERO BEACH, FL 32960
(561)569-2200

CONSULTANTS
W. W. SCHAEFER ENGINEERING & CONSULTING, P.A.
600 SANDTREE DRIVE; SUITE 203B
PALM BEACH GARDENS, FL 33403
PHONE: 561-775-4902 FAX: 561-775-4903

CERTIFICATION
NOV 20 2000
WARREN W. SCHAEFER, P.E.
P.E. NO. 44135

DRAWING NO. 1001A
REV.
SHEET NO. 2 OF 10

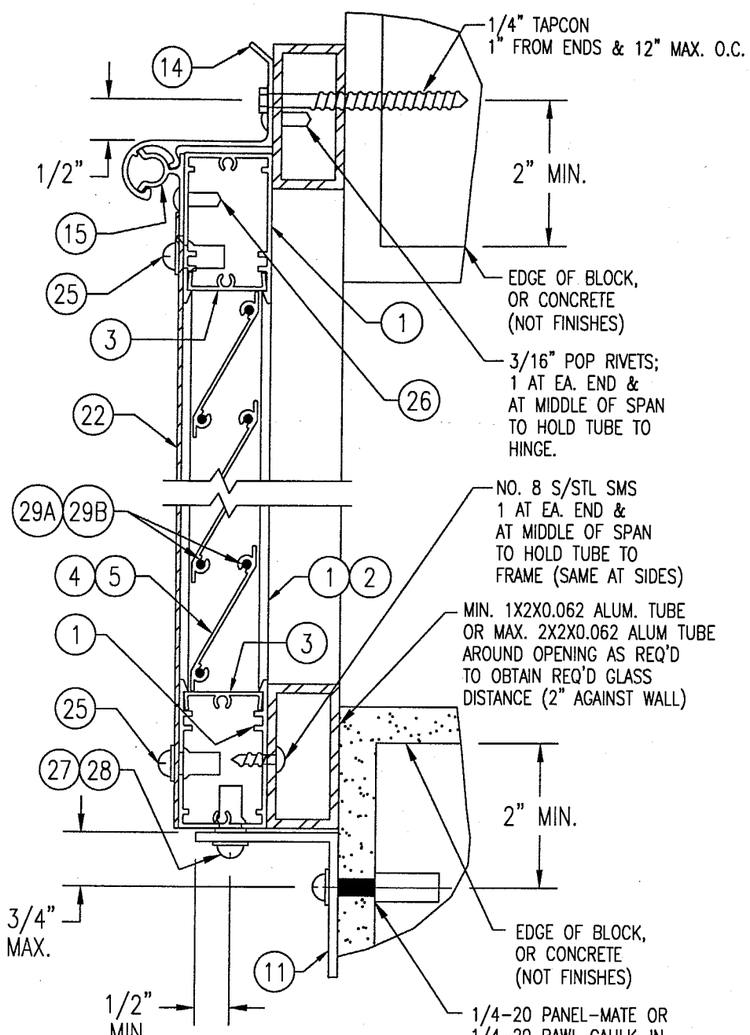

SECTION A/3
SCALE: 1/2 FULL
(BUILD-OUT MOUNT ONTO BLOCK/CONCRETE)

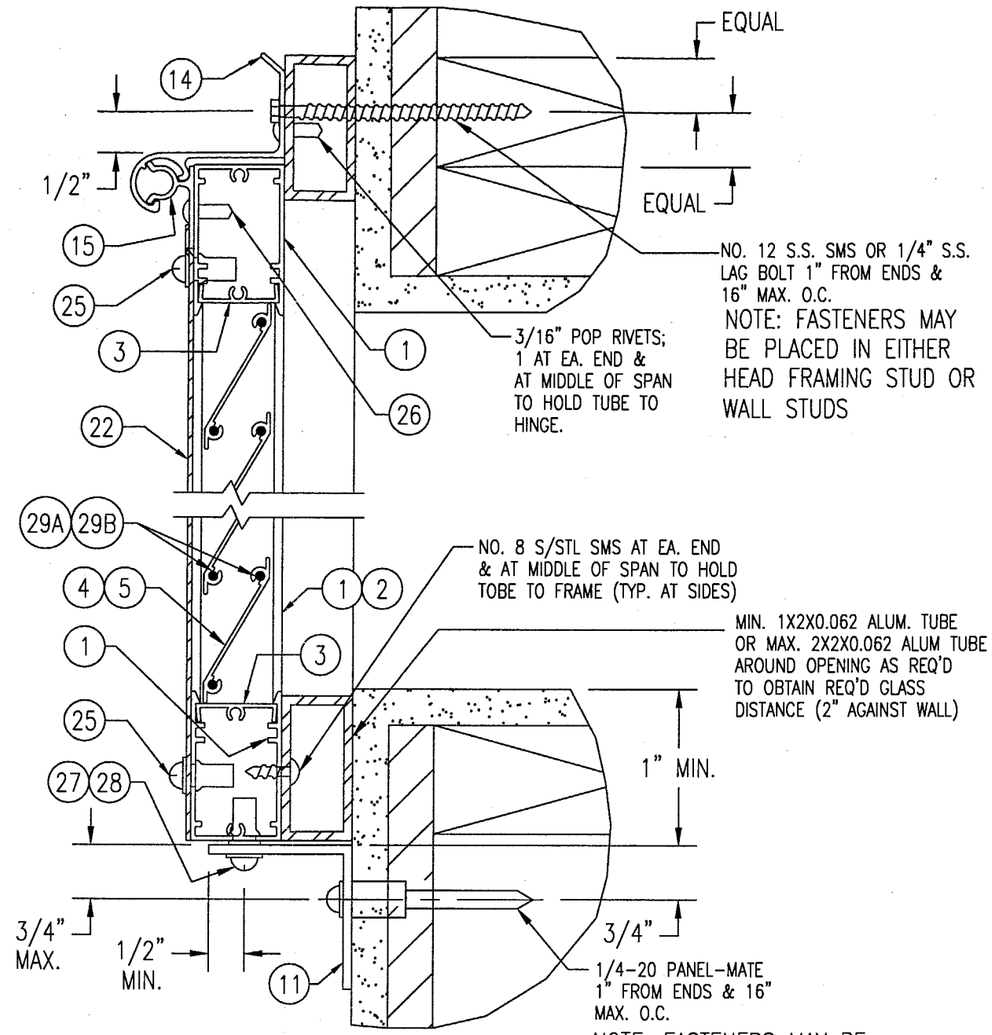

SECTION A/3
SCALE: 1/2 FULL
(BUILD-OUT MOUNT ONTO WOOD FRAME)

FOR FASTENER EDGE DISTANCE & SPACING REQUIREMENTS, SEE SHEET 2.

APPROVED AS COMPLYING WITH THE SOUTH FLORIDA BUILDING CODE
DATE 03/08/2001
BY [signature]
PRODUCT CONTROL DIVISION
BUILDING CODE COMPLIANCE OFFICE
ACCEPTANCE NO. 00-0411-08

DRAWN BY: W.W.S.	CHECKED BY: W.W.S.
PLOT: 1=2	DATE: 11/17/00

NO.	REVISION DESCRIPTION	BY	DATE

DRAWING TITLE: IMPACT BAHAMA SHUTTERS (DADE)

MANUFACTURER: FLORIDA SHUTTERS, INC.
1125 COMMERCE AVENUE
VERO BEACH, FL 32960
(561)569-2200

CONSULTANTS: W. W. SCHAEFER ENGINEERING & CONSULTING, P.A.
600 SANDTREE DRIVE; SUITE 203B
PALM BEACH GARDENS, FL 33403
PHONE: 561-775-4902 FAX: 561-775-4903

CERTIFICATION
NOV 20 2000
WARREN W. SCHAEFER, P.E.
P.E. NO. 44135

DRAWING NO. 1001A | REV.

SHEET NO. 3 OF 10

NOTE:
THE ARMS MAY BE MOUNTED ON THE WALL ABOVE THE SILL LEVEL PROVIDING THE ARMS ANGLE TO THE HORIZONTAL DOES NOT EXCEED 30 DEGREES.

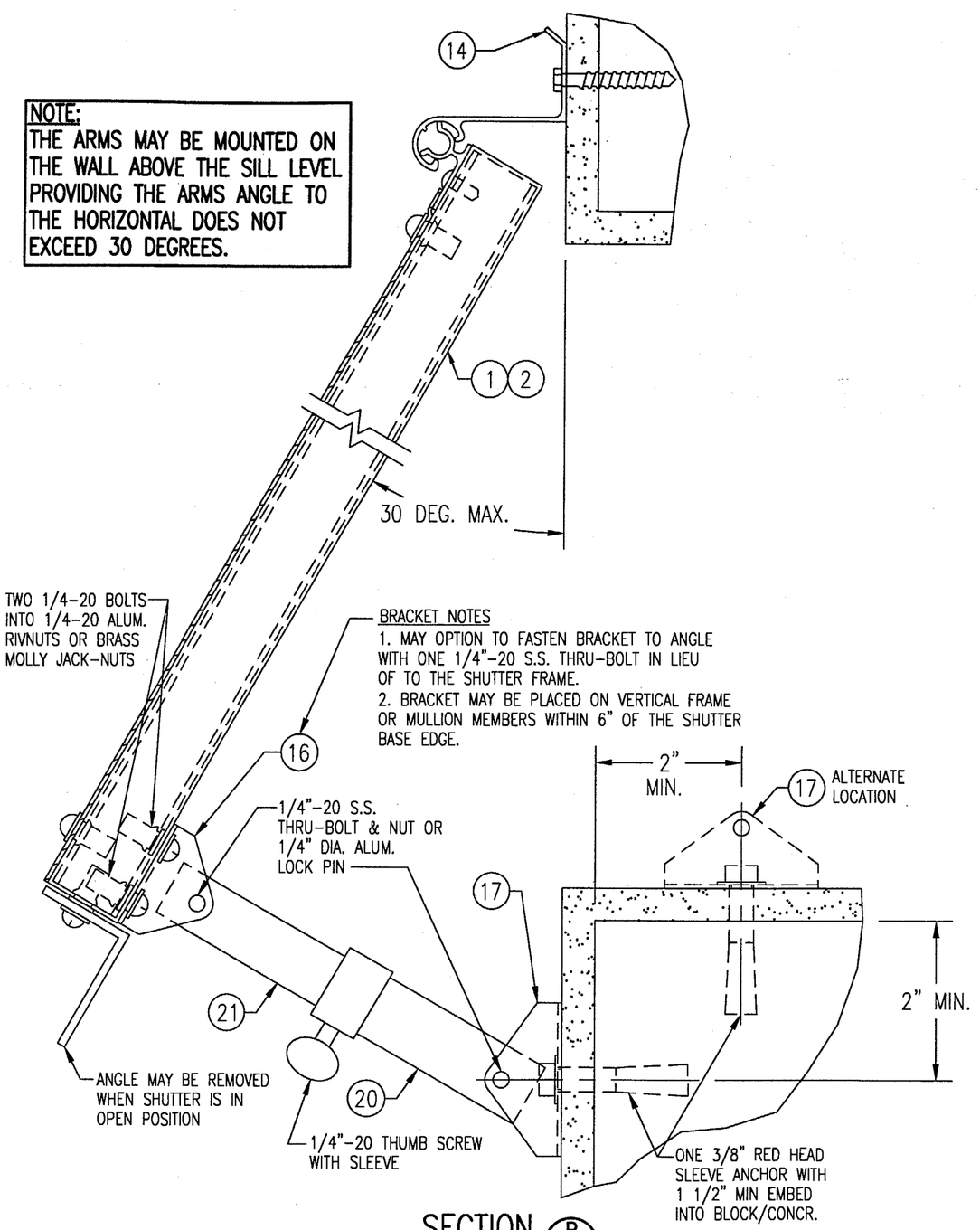

BRACKET NOTES
1. MAY OPTION TO FASTEN BRACKET TO ANGLE WITH ONE 1/4"-20 S.S. THRU-BOLT IN LIEU OF TO THE SHUTTER FRAME.
2. BRACKET MAY BE PLACED ON VERTICAL FRAME OR MULLION MEMBERS WITHIN 6" OF THE SHUTTER BASE EDGE.

SECTION B/4
SCALE: 1/2 FULL

(OPEN SHUTTER AT FACE MOUNT CONDITION TO BLOCK/CONCRETE)

SEE "ARM SPACING TABLE" ON SHEET 1 FOR SPACING OF ARMS

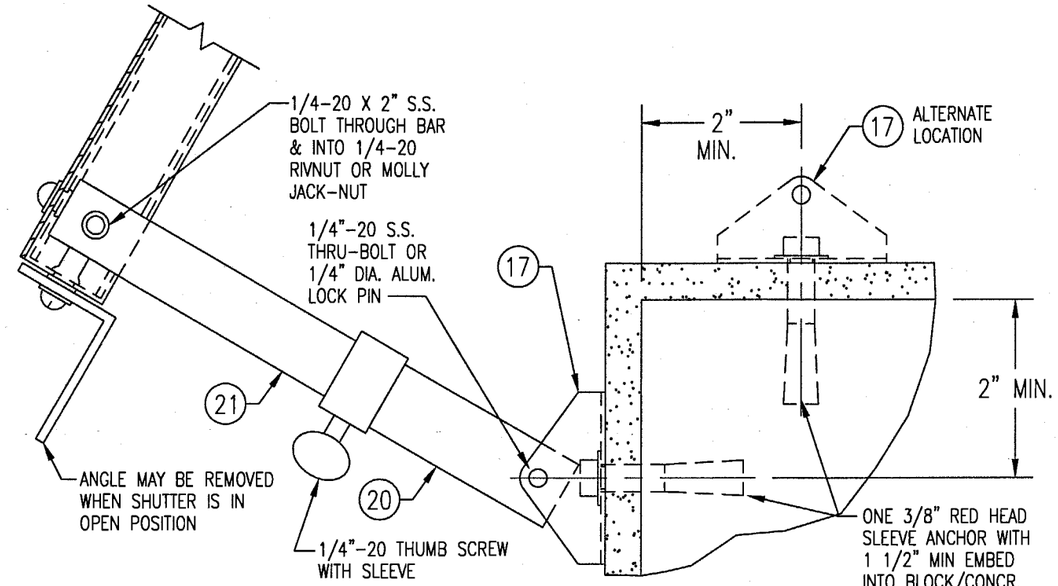

ALTERNATE TO SECTION B ON THIS SHEET
(END ARMS ONLY)

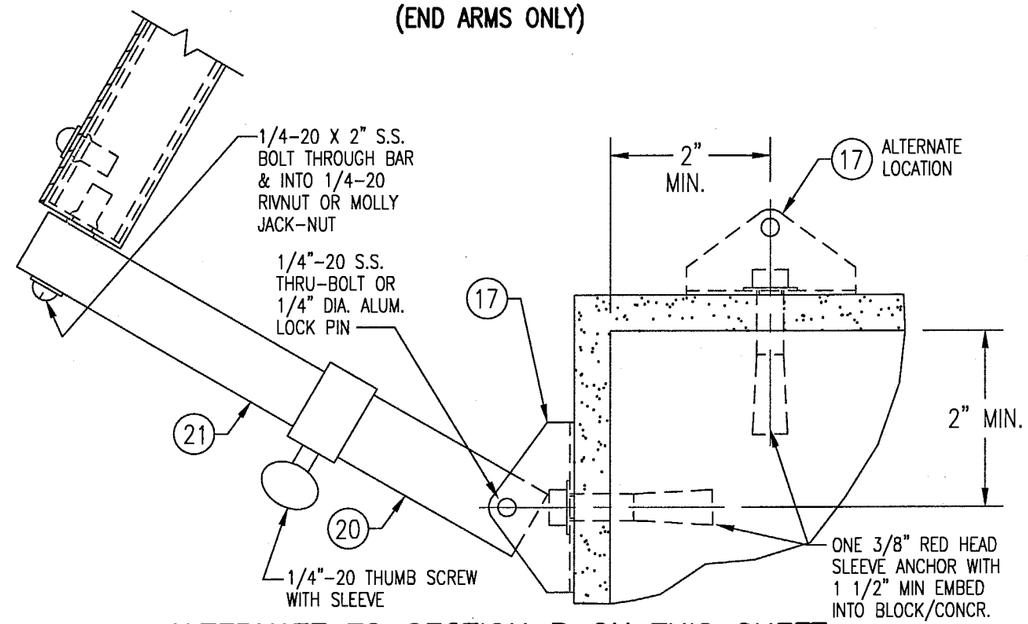

ALTERNATE TO SECTION B ON THIS SHEET

FOR FASTENER EDGE DISTANCE & SPACING REQUIREMENTS, SEE SHEET 2.

APPROVED AS COMPLYING WITH THE SOUTH FLORIDA BUILDING CODE
DATE 03/08/2001
BY [signature]
PRODUCT CONTROL DIVISION
BUILDING CODES COMPLIANCE OFFICE
ACC. NO. 00-0411.08

DRAWN BY: W.W.S.	CHECKED BY: W.W.S.
PLOT: 1=2	DATE: 11/17/00

NO.	REVISION DESCRIPTION	BY	DATE

(DADE)

DRAWING TITLE: IMPACT BAHAMA SHUTTERS

MANUFACTURER: FLORIDA SHUTTERS, INC.
1125 COMMERCE AVENUE
VERO BEACH, FL 32960
(561)569-2200

CONSULTANTS: W. W. SCHAEFER ENGINEERING & CONSULTING, P.A.
600 SANDTREE DRIVE; SUITE 203B
PALM BEACH GARDENS, FL 33403
PHONE: 561-775-4902 FAX: 561-775-4903

CERTIFICATION
NOV 20 2000
WARREN W. SCHAEFER, P.E.
P.E. NO. 44135

DRAWING NO. 1001A
REV.
SHEET NO. 4 OF 10

NOTE:
THE ARMS MAY BE MOUNTED ON THE WALL ABOVE THE SILL LEVEL PROVIDING THE ARMS ANGLE TO THE HORIZONTAL DOES NOT EXCEED 30 DEGREES.

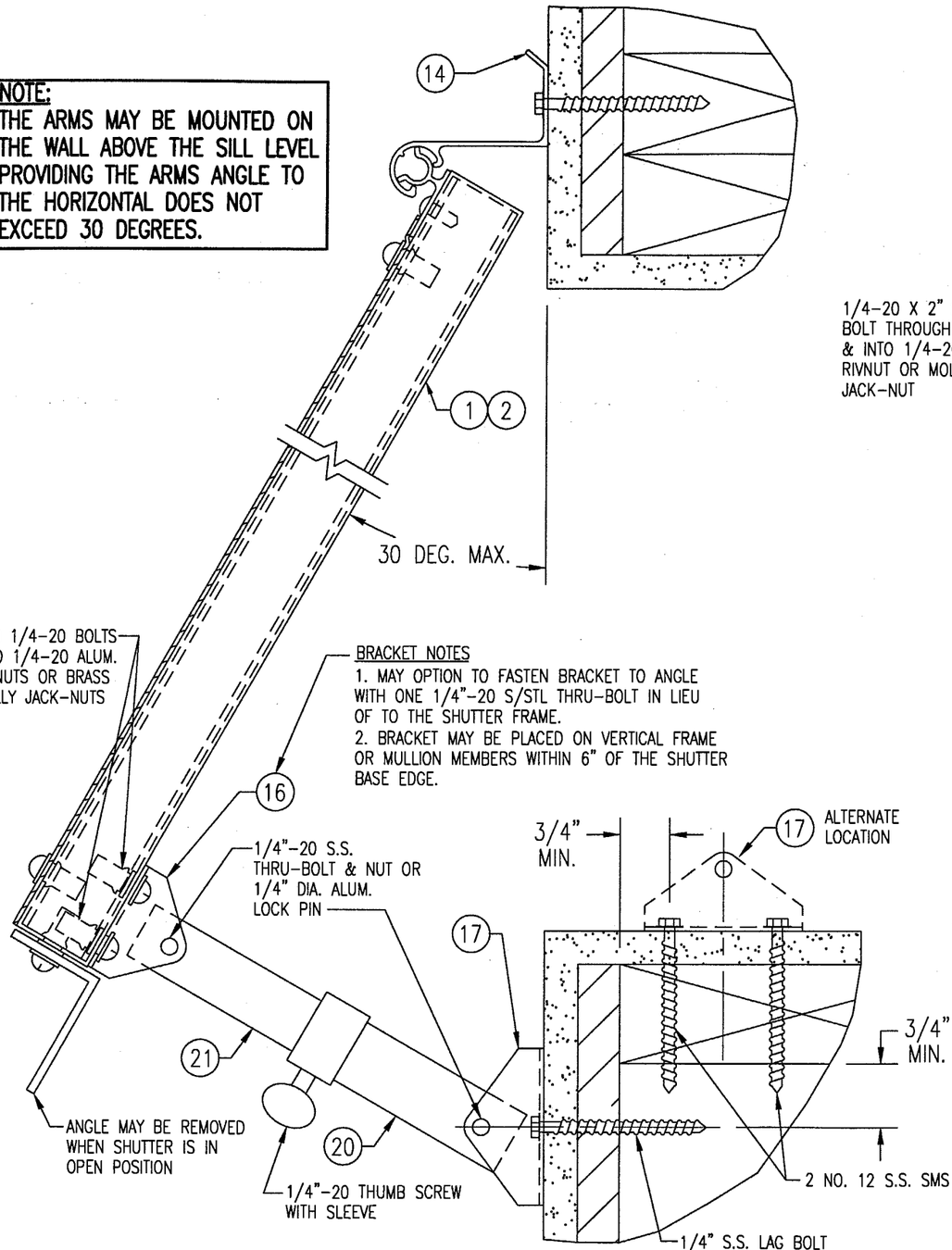

BRACKET NOTES
1. MAY OPTION TO FASTEN BRACKET TO ANGLE WITH ONE 1/4"-20 S/STL THRU-BOLT IN LIEU OF TO THE SHUTTER FRAME.
2. BRACKET MAY BE PLACED ON VERTICAL FRAME OR MULLION MEMBERS WITHIN 6" OF THE SHUTTER BASE EDGE.

SECTION B/5
SCALE: 1/2 FULL

(OPEN SHUTTER AT FACE MOUNT CONDITION TO WOOD FRAMING)

SEE "ARM SPACING TABLE" ON SHEET 1 FOR SPACING OF ARMS

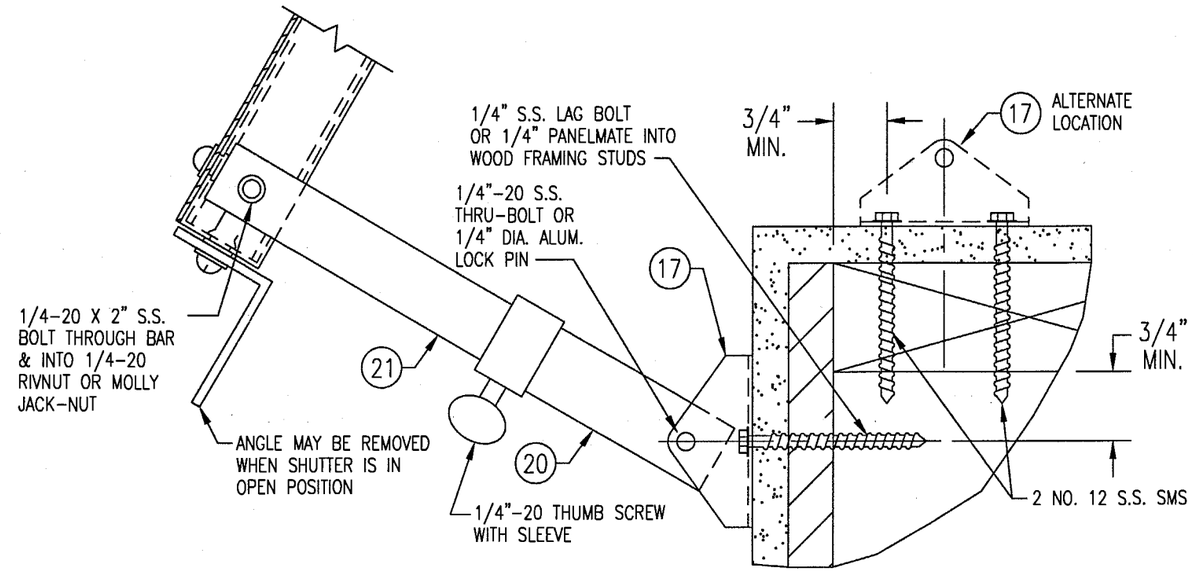

ALTERNATE TO SECTION B ON THIS SHEET (END ARMS ONLY)

SEE "ARM SPACING TABLE" ON SHEET 1 FOR SPACING OF ARMS

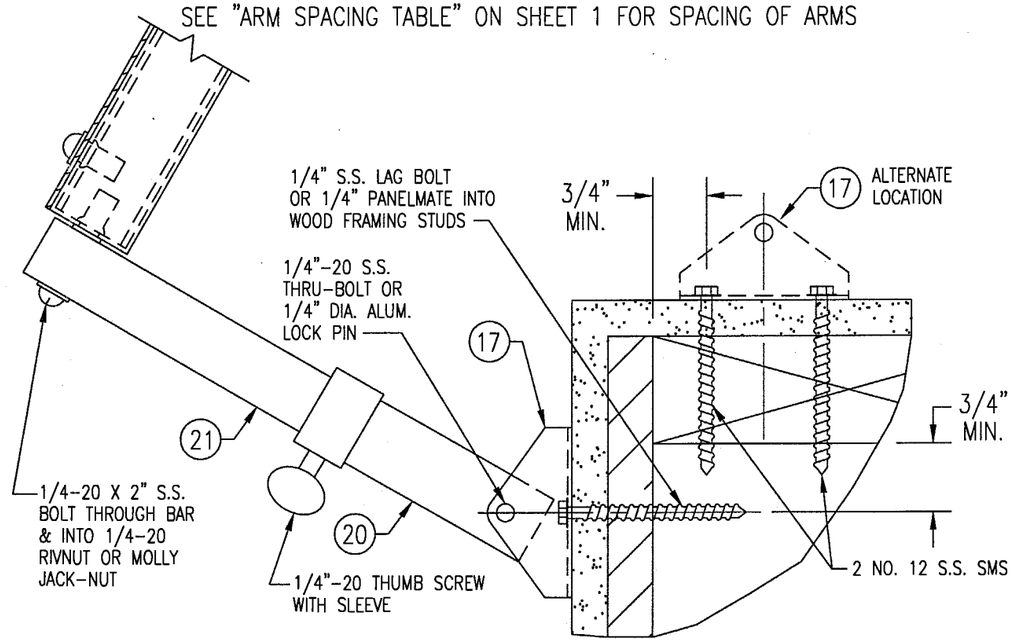

ALTERNATE TO SECTION B ON THIS SHEET

SEE "ARM SPACING TABLE" ON SHEET 1 FOR SPACING OF ARMS

FOR FASTENER EDGE DISTANCE & SPACING REQUIREMENTS, SEE SHEET 2.

APPROVED AS COMPLYING WITH THE SOUTH FLORIDA BUILDING CODE
DATE 03/08/2001
BY [signature]
PRODUCT CONTROL DIVISION
BUILDING CODE COMPLIANCE OFFICE
ACCEPTANCE NO. 00-0411.08

DRAWN BY: W.W.S.	CHECKED BY: W.W.S.
PLOT: 1=2	DATE: 11/17/00

NO.	REVISION DESCRIPTION	BY	DATE

DRAWING TITLE: IMPACT BAHAMA SHUTTERS (DADE)

MANUFACTURER: FLORIDA SHUTTERS, INC.
1125 COMMERCE AVENUE
VERO BEACH, FL 32960
(561)569-2200

CONSULTANTS: W. W. SCHAEFER ENGINEERING & CONSULTING, P.A.
600 SANDTREE DRIVE; SUITE 203B
PALM BEACH GARDENS, FL 33403
PHONE: 561-775-4902 FAX: 561-775-4903

CERTIFICATION: NOV 20 2000
WARREN W. SCHAEFER, P.E.
P.E. NO. 44135

DRAWING NO. 1001A | REV.

SHEET NO. 5 OF 10

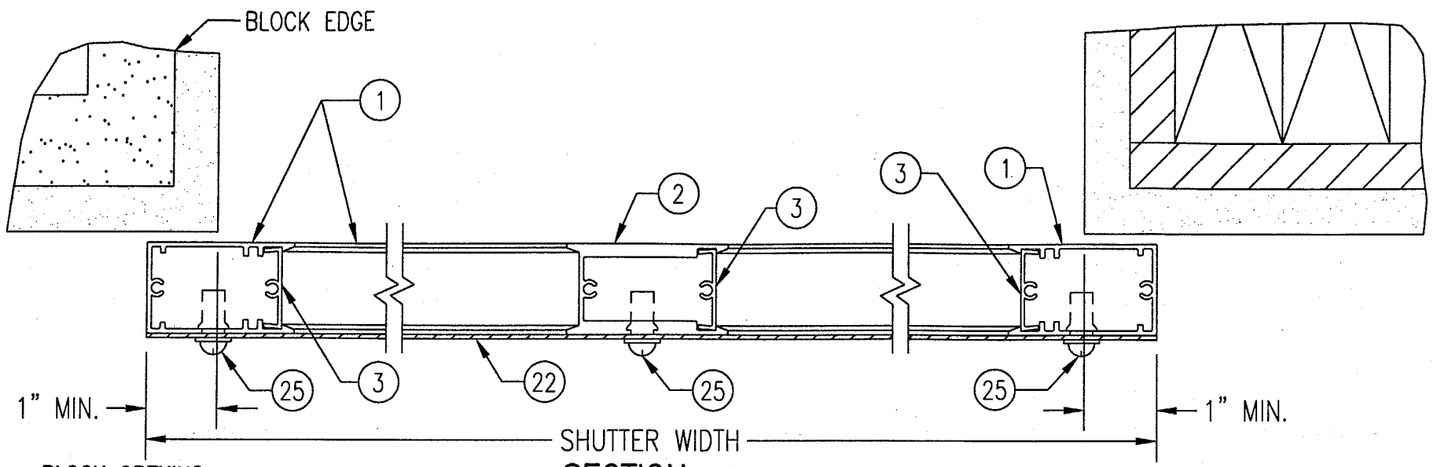

SECTION C/6 FLUSH MOUNT
SCALE: 1/3 FULL
STORM BAR & ARMS NOT SHOWN FOR CLARITY!
3 & 4 PANEL SHUTTERS SIMILAR

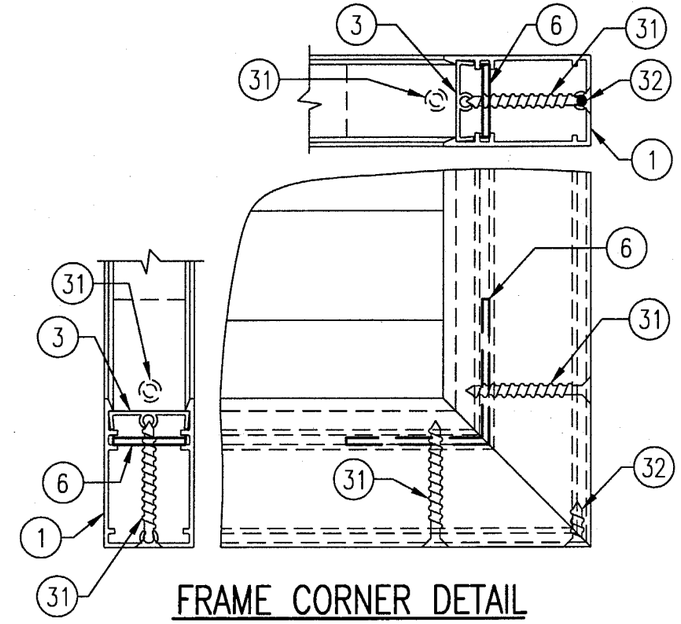

FRAME CORNER DETAIL
SCALE: 1/2 FULL

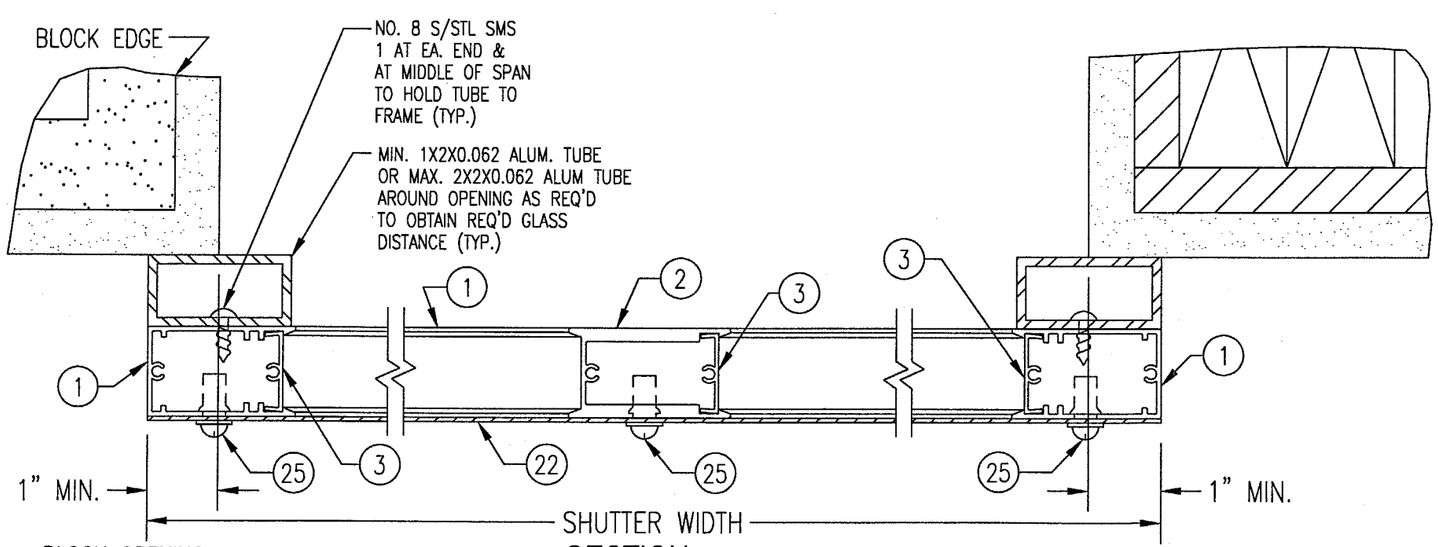

SECTION C/6 BUILD-OUT
SCALE: 1/3 FULL
STORM BAR & ARMS NOT SHOWN FOR CLARITY!
3 & 4 PANEL SHUTTERS SIMILAR

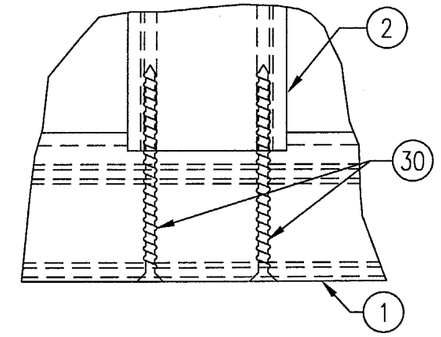

MULLION END CONNECTION DETAIL
SCALE: 1/2 FULL

APPROVED AS COMPLYING WITH THE
SOUTH FLORIDA BUILDING CODE
DATE 03/08/2001
BY [signature]
PRODUCT CONTROL DIVISION
BUILDING CODE COMPLIANCE OFFICE
ACCEPTANCE NO. 00-0411.08

DRAWN BY: W.W.S.	CHECKED BY: W.W.S.
PLOT: 1=2	DATE: 11/17/00

NO.	REVISION DESCRIPTION	BY	DATE

DRAWING TITLE: IMPACT BAHAMA SHUTTERS (DADE)

MANUFACTURER: FLORIDA SHUTTERS, INC.
1125 COMMERCE AVENUE
VERO BEACH, FL 32960
(561)569-2200

CONSULTANTS: W. W. SCHAEFER ENGINEERING & CONSULTING, P.A.
600 SANDTREE DRIVE, SUITE 203B
PALM BEACH GARDENS, FL 33403
PHONE: 561-775-4902 FAX: 561-775-4903

CERTIFICATION
NOV 20 2000
WARREN W. SCHAEFER, P.E.
P.E. NO. 44135

DRAWING NO. 1001A
REV.
SHEET NO. 6 OF 10

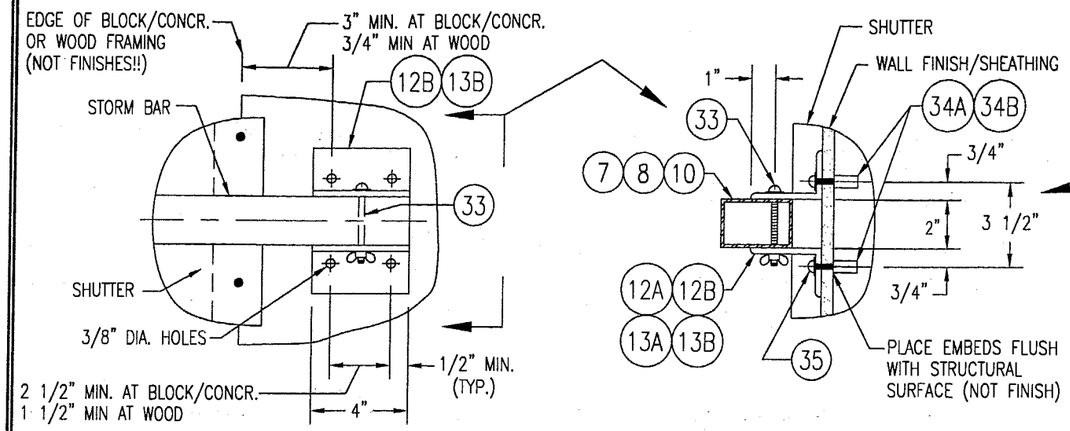

STORM BAR END CONNECTION "A"

SCALE: 2"=1'-0"

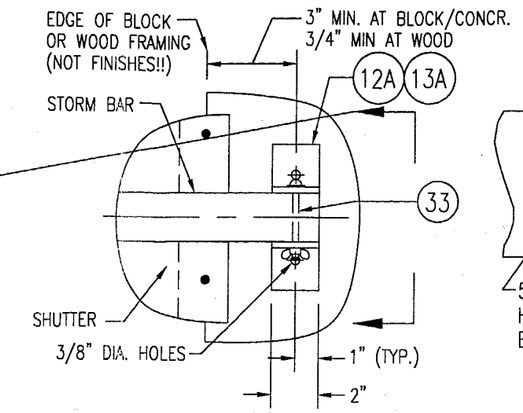

STORM BAR END CONNECTION "B"

SCALE: 2"=1'-0"

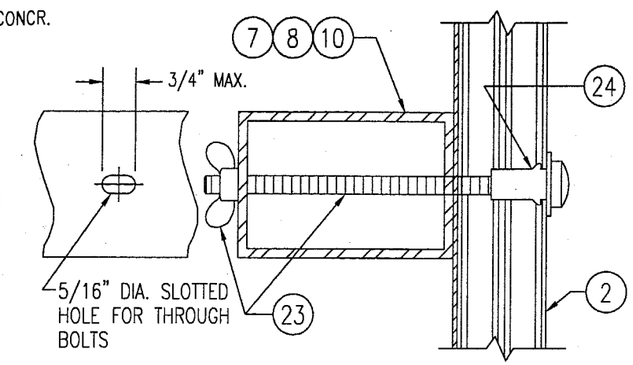

STORM BAR TO MULLION CONNECTION DETAIL

SCALE: 1/2 FULL

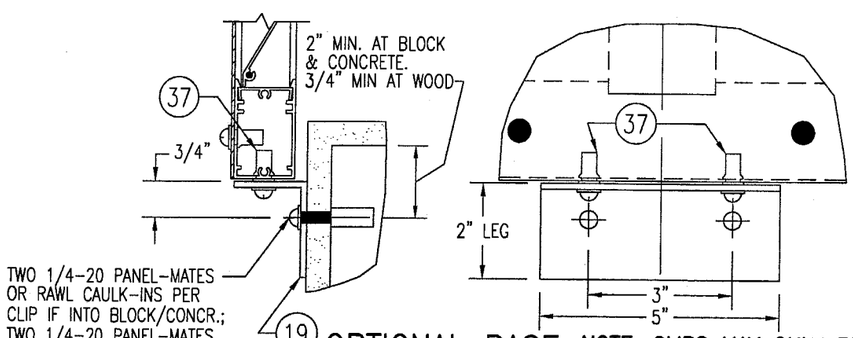

OPTIONAL BASE CLIP DETAIL 1

NOTE: CLIPS MAY ONLY BE USED WITH WOOD FRAMING IF ATTACHED TO A CONTINUOUS SILL MEMBER

PLACE 1 CLIP AT EACH CORNER & MULLION LOCATION

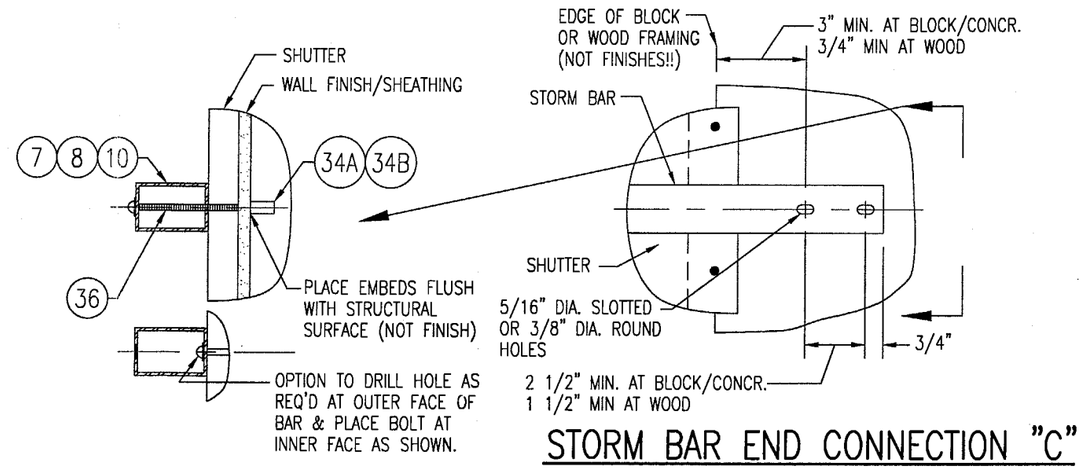

STORM BAR END CONNECTION "C"

SCALE: 2"=1'-0"

APPROVED AS COMPLYING WITH THE
SOUTH FLORIDA BUILDING CODE
DATE 03/08/2001
BY Helmy H. Moka
PRODUCT CONTROL DIVISION
BUILDING CODE COMPLIANCE OFFICE
ACCEPTANCE NO. 00-0411.08

NO.	REVISION DESCRIPTION	BY	DATE

DRAWN BY: W.W.S. | CHECKED BY: W.W.S.
PLOT: 1=3 | DATE: 11/17/00

(DADE)

DRAWING TITLE: IMPACT BAHAMA SHUTTERS

MANUFACTURER: FLORIDA SHUTTERS, INC.
1125 COMMERCE AVENUE
VERO BEACH, FL 32960
(561)569-2200

CONSULTANTS: W. W. SCHAEFER ENGINEERING & CONSULTING, P.A.
600 SANDTREE DRIVE; SUITE 203B
PALM BEACH GARDENS, FL 33403
PHONE: 561-775-4902 FAX: 561-775-4903

CERTIFICATION NOV 20 2000
WARREN W. SCHAEFER, P.E.
P.E. NO. 44135

DRAWING NO. 1001A | REV.

SHEET NO. 7 OF 10

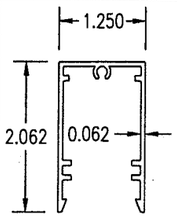

1 FRAME
6063-T6 ALUMINUM

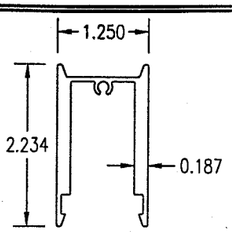

2 MULLION
6061-T6 ALUMINUM

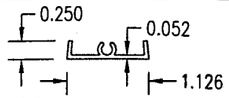

3 FRAME CAP
6063-T6 ALUMINUM

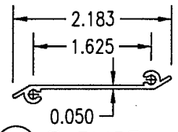

4 Z-BLADE
6063-T6 ALUMINUM

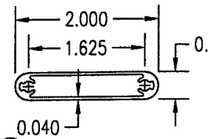

5 HOLLOW BLADE
6063-T6 ALUMINUM

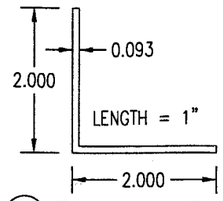

6 FRAME CORNER KEY
6063-T5 ALUMINUM

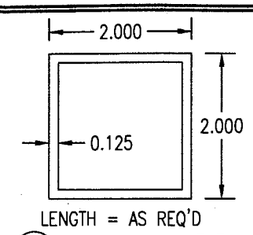

7 STORM BAR "A"
6061-T6 OR 6005-T5 ALUMINUM

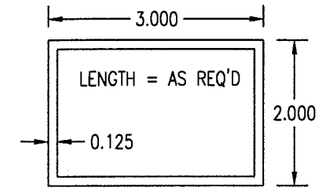

8 STORM BAR "B"
6061-T6 OR 6005-T5 ALUMINUM

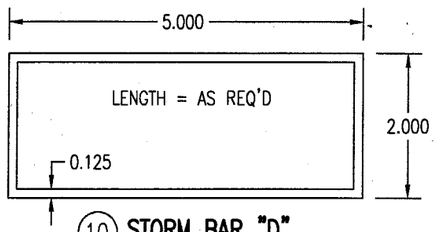

10 STORM BAR "D"
6061-T6 OR 6005-T5 ALUMINUM

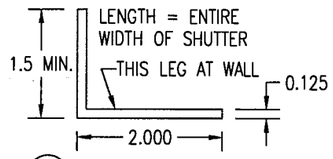

11 BASE ANGLE
6063-T5 ALUMINUM

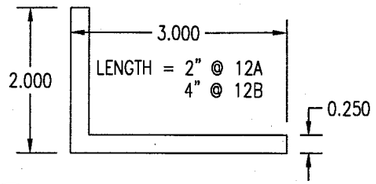

12A 12B STORM BAR CONNECTION ANGLE
6063-T5 ALUMINUM

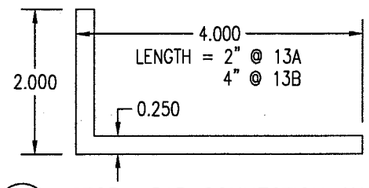

13A 13B STORM BAR CONNECTION ANGLE
6063-T5 ALUMINUM

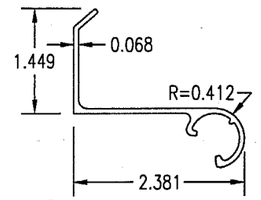

14 FEMALE HINGE
6061-T6 ALUMINUM

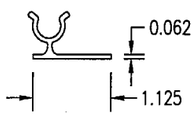

15 MALE HINGE
6061-T6 ALUMINUM

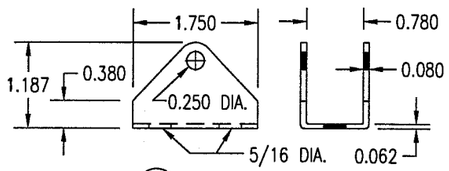

16 SUPPORT BRACKET
6063-T6 ALUMINUM

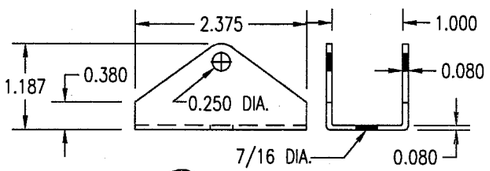

17 SUPPORT BRACKET
6063-T6 ALUMINUM

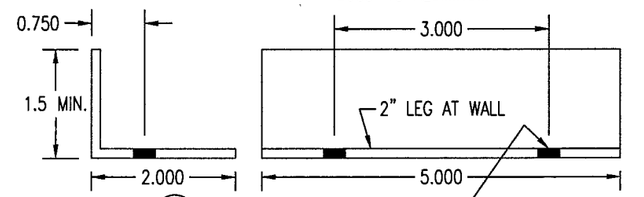

19 OPTIONAL BASE ANGLE
6063-T5 ALUMINUM

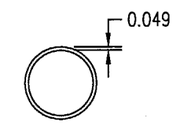

1" O.D. SERRATED TUBE

20 OUTSIDE ARM
6063-T6 ALUMINUM

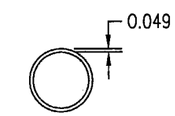

7/8" O.D. SERRATED TUBE

21 INSIDE ARM
6063-T6 ALUMINUM

NOTE: ALL DETAILS ARE DRAWN TO 1/2 FULL SIZE UNLES NOTED OTHERWISE.

MATERIAL LIST

NO.	DESCRIPTION	NOTES
1	SHUTTER FRAME	6063-T6 ALUMINUM
2	MULLION	6061-T6 ALUMINUM
3	FRAME CAP	6063-T6 ALUMINUM
4	Z-BLADE	6063-T6 ALUMINUM
5	HOLLOW BLADE	6063-T6 ALUMINUM
6	L2X2X0.093 FRAME CORNER KEY	6063-T5 ALUMINUM; PLACED AT EA. FRAME CORNER
7	TS2X2X1/8 STORM BAR	6061-T6 OR 6005-T5 ALUMINUM
8	TS3X2X1/8 STORM BAR	6061-T6 OR 6005-T5 ALUMINUM
9	OPEN	
10	TS5X2X1/8 STORM BAR	6061-T6 OR 6005-T5 ALUMINUM
11	L2XMINIMUM1.5X1/8 CONT. BASE ANGLE	6063-T5 ALUMINUM; SECURES SHUTTERS CLOSED
12A	L3X2X1/4 STORM BAR END CONNECTOR	6063-T5 ALUMINUM; 2" LONG; USED WITH-OUT BUILD-OUT
12B	L3X2X1/4 STORM BAR END CONNECTOR	6063-T5 ALUMINUM; 4" LONG; USED WITH-OUT BUILD-OUT
13A	L4X2X1/4 STORM BAR END CONNECTOR	6063-T5 ALUMINUM; 2" LONG; USED WITH BUILD-OUT
13B	L4X2X1/4 STORM BAR END CONNECTOR	6063-T5 ALUMINUM; 4" LONG; USED WITH BUILD-OUT
14	FEMALE TOP HINGE	6061-T6 ALUMINUM; FULL WIDTH OF SHUTTER
15	MALE TOP HINGE	6061-T6 ALUMINUM; FULL WIDTH OF SHUTTER
16	SHUTTER ARM SUPPORT BRACKET	6063-T6 ALUMINUM; ARM TO SHUTTER BRACKET
17	SHUTTER ARM SUPPORT BRACKET	6063-T6 ALUMINUM; ARM TO WALL BRACKET
18	OPEN	

NO.	DESCRIPTION	NOTES
19	L2XMINIMUM1.5X1/8 BASE ANGLE 5" LONG	6063-T5 ALUMINUM; 1 AT EA. VERTICAL SHUTTER MEMBER
20	OUTER PORTION OF SHUTTER ARM	6063-T6 ALUMINUM
21	INNER PORTION OF SHUTTER ARM	6063-T6 ALUMINUM
22	0.050" THICK ALUMINUM HURRICANE SHEET	3003-H14 ALUM.; MIN. SEAM OVERLAPS = 2" @ MULLIONS
23	1/4" STL BOLT OR THREADED ROD W/WING NUT	STORM BAR TO SHUTTER MULLIONS
24	1/4" MOLLY JACK NUT OR 6061-T6 RIVNUT	FOR SETTING OF NO. 23 ABOVE INTO MULLIONS
25	1/4-20 S/STL BOLTS & 6061-T6 RIVNUTS	AT FRAME CORNERS & 12" MAX. O.C. (SHEET TO SHUTTER)
26	3/16" 5052 ALUMINUM POP RIVETS	1" FROM HINGE ENDS & 6" MAX. O.C. (TOP HINGE TO SHUTTER)
27	3/16" 5052 ALUMINUM POP RIVETS	1" FROM ANGLE ENDS & 6" MAX. O.C. (BASE ANGLE TO SHUTTER)
28	1/4-20 S/STL BOLTS & 6061-T6 RIVNUTS	1" FROM ENDS & 12" MAX. O.C. (BASE ANGLE TO SHUTTER)
29A	NO. 6 X 5/8" S/STL P.H. SMS	SECURES Z-BLADE END TO FRAME CAP (2 PER BLADE END)
29B	NO. 8 X 5/8" S/STL P.H. SMS	SECURES HOLLOW BLADE END TO FRAME CAP (2 PER BLADE END)
30	NO. 8 X 3" S/STL F.H. SMS	2 PER MULLION END THROUGH FRAME
31	NO. 6 X 1 3/4" S/STL F.H. SMS	2 PER FRAME CORNER INTO CORNER KEY
32	NO. 6 X 5/8" S/STL F.H. SMS	1 PER FRAME CORNER INTO FRAME SCREW BOSS
33	1/4" X MIN. 3" STL. BOLT W/WING NUT	1 PER STORM BAR END THROUGH END ANGLES & BAR
34A	1/4-20 RAWL CAULK-IN	EMBED FULL ANCHOR BODY INTO BLOCK/CONCR.
34B	1/4-20 MALE OR FEMALE PANEL MATE	EMBED 1 1/2" INTO WOOD & MIN. 1 1/4" INTO BLOCK
35	1/4" STL BOLT OR THREADED ROD W/ WINGNUT	ANCHORS STORM BAR ENDS TO WALL ANCHORS
36	1/4-20 STEEL BOLT	ANCHORS STORM BAR END CLIPS TO WALL ANCHORS
37	1/4-20 S/STL BOLTS & 6061-T6 RIVNUTS	2 PER BASE CLIP INTO SHUTTER FRAME

APPROVED AS COMPLYING WITH THE SOUTH FLORIDA BUILDING CODE
DATE 03/08/2001
BY [signature]
PRODUCT CONTROL DIVISION
BUILDING CODE COMPLIANCE OFFICE
ACCEPTANCE NO. 00-0411.08

DRAWN BY: W.W.S.	CHECKED BY: W.W.S.
PLOT: 1=2	DATE: 11/17/00

NO.	REVISION DESCRIPTION	BY	DATE

(DADE)

DRAWING TITLE
IMPACT BAHAMA SHUTTERS

MANUFACTURER
FLORIDA SHUTTERS, INC.
1125 COMMERCE AVENUE
VERO BEACH, FL 32960
(561)569-2200

CONSULTANTS
W. W. SCHAEFER ENGINEERING & CONSULTING, P.A.
600 SANDTREE DRIVE; SUITE 203B
PALM BEACH GARDENS, FL 33403
PHONE: 561-775-4902 FAX: 561-775-4903

CERTIFICATION
NOV 20 2000
WARREN W. SCHAEFER, P.E.
P.E. NO. 44135

DRAWING NO. 1001A
REV.

SHEET NO. 8 OF 10

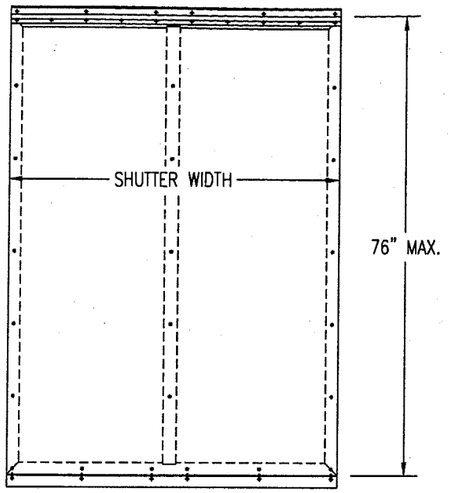

NO BARS
(SINGLE SPAN SHUTTER)

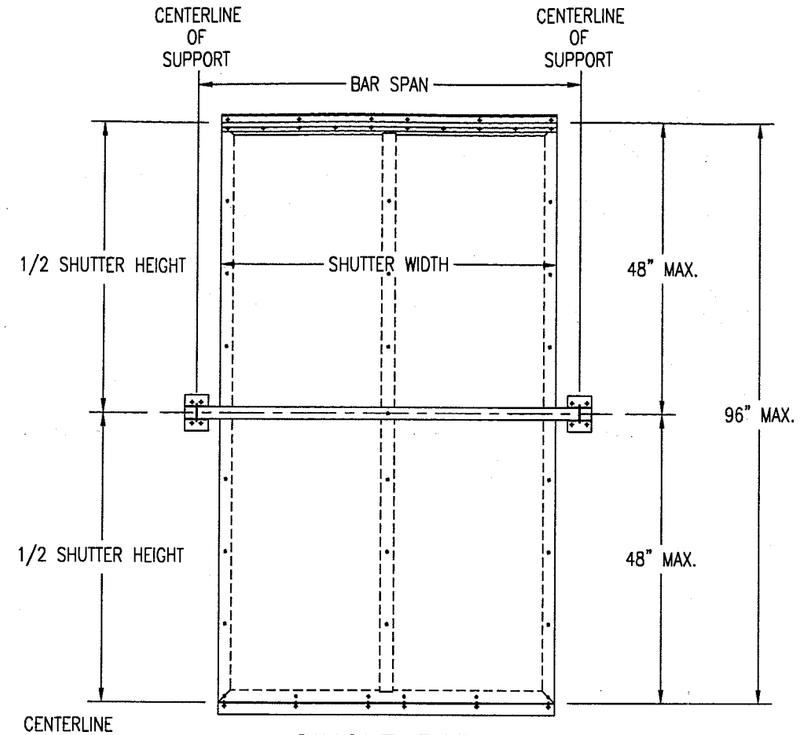

SINGLE BAR
(TWO SPAN SHUTTER)

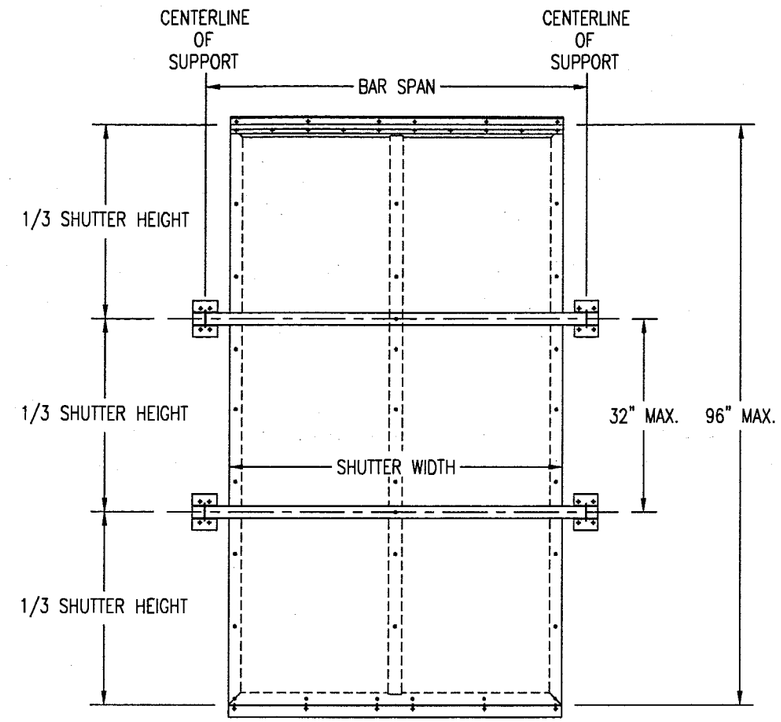

TWO BARS
(THREE SPAN SHUTTER)

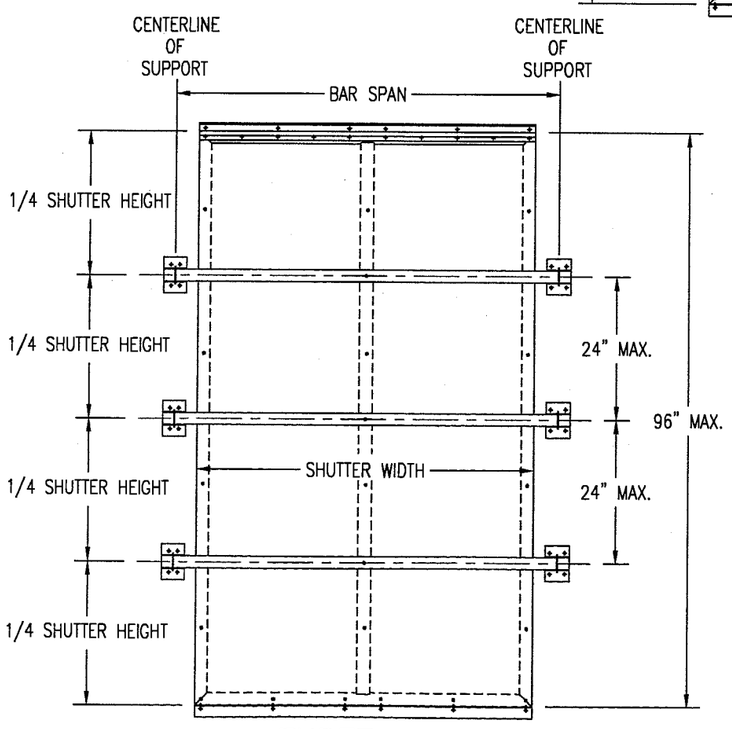

THREE BARS
(FOUR SPAN SHUTTER)

ALLOWABLE PRESSURE TABLE FOR SINGLE SPAN SHUTTERS

SHUTTER HEIGHT	PRESSURE (PSF)	
	POS	NEG
60" & LESS	80.0	80.0
62"	73.0	76.2
64"	64.3	71.7
66"	56.9	67.4
68"	50.5	63.5
70"	44.9	58.8
72"	40.1	52.5
74"	36.0	46.3
76"	32.3	40.0

NOTE:
1. ALL SHUTTERS MUST BE PLACED A MIN. DISTANCE OF 2.25" AWAY FROM THE GLASS.

APPROVED AS COMPLYING WITH THE
SOUTH FLORIDA BUILDING CODE
DATE 03/08/2001
BY [signature]
PRODUCT CONTROL DIVISION
BUILDING CODE COMPLIANCE OFFICE
ACCEPTANCE NO. 00-0411.08

DRAWN BY: W.W.S.	CHECKED BY: W.W.S.
PLOT: 1=24	DATE: 11/17/00

NO.	REVISION DESCRIPTION	BY	DATE

DRAWING TITLE: IMPACT BAHAMA SHUTTERS (DADE)

MANUFACTURER: FLORIDA SHUTTERS, INC.
1125 COMMERCE AVENUE
VERO BEACH, FL 32960
(561)569-2200

CONSULTANTS: W. W. SCHAEFER ENGINEERING & CONSULTING, P.A.
600 SANDTREE DRIVE, SUITE 203B
PALM BEACH GARDENS, FL 33403
PHONE: 561-775-4902 FAX: 561-775-4903

CERTIFICATION: NOV 20 2000
WARREN W. SCHAEFER, P.E.
P.E. NO. 44135

DRAWING NO. 1001A | REV.

SHEET NO. 9 OF 10

PRESSURE LOAD TABLE FOR STORM BARS & BAR END CONNECTIONS

SHUTTER WIDTH (IN)	BAR SPACING (IN)	ALLOWABLE PRESSURES (PSF) AS CONTROLLED BY BARS			ALLOWABLE PRESSURE (PSF) AS CONTROLLED BY CONNECTIONS		
					CONN "A"	CONN "B" & "C"	
		TS2X2X1/8	TS3X2X1/8	TS5X2X1/8	WOOD/CONC./BLOCK	WOOD	BLOCK/CONC
36	42	80	80	80	80	80	80
	48	80	80	80	80	80	70
42	36	80	80	80	80	80	80
	42	80	80	80	80	80	69
	48	80	80	80	80	80	60
48	30	80	80	80	80	80	80
	36	80	80	80	80	80	70
	42	80	80	80	80	80	60
	48	70	80	80	80	70	53
54	30	80	80	80	80	80	75
	36	71	80	80	80	80	62
	42	61	80	80	80	71	53
	48	54	80	80	80	62	47
60	24	75	80	80	80	80	80
	30	60	80	80	80	80	67
	36	50	80	80	80	75	56
	42	43	80	80	80	64	48
	48	37	80	80	80	56	42
66	24	54	80	80	80	80	77
	30	33	80	80	80	80	61
	36	36	80	80	80	68	51
	42	31	80	80	80	58	44
	48	27	73	80	79	51	38
72	24	40	80	80	80	80	70
	30	32	80	80	80	75	56
	36	27	72	80	80	62	47
	42	–	61	80	80	53	40
	48	–	54	80	73	47	35
78	24	30	80	80	80	80	65
	30	–	65	80	80	69	52
	36	–	54	80	80	57	43
	42	–	46	80	77	49	37
	48	–	41	80	67	43	32
84	24	–	62	80	80	80	60
	30	–	50	80	80	64	48
	36	–	42	80	80	53	40
	42	–	36	80	71	46	34
	48	–	31	80	62	40	30
90	24	–	49	80	80	75	56
	30	–	39	80	80	60	45
	36	–	32	80	77	50	37
	42	–	28	80	66	43	32
	48	–	–	80	58	37	28

1. ALL PRESSURES ARE FOR BOTH POSITIVE & NEGATIVE AND ARE PSF.
2. REF. SHEET 7 FOR CONNECTION TYPES.

PRESSURE LOAD TABLE FOR STORM BARS & BAR END CONNECTIONS

SHUTTER WIDTH (IN)	BAR SPACING (IN)	ALLOWABLE PRESSURES (PSF) AS CONTROLLED BY BARS			ALLOWABLE PRESSURE (PSF) AS CONTROLLED BY CONNECTIONS		
					CONN "A"	CONN "B" & "C"	
		TS2X2X1/8	TS3X2X1/8	TS5X2X1/8	WOOD/CONC./BLOCK	WOOD	BLOCK/CONC
96	24	–	39	80	80	70	53
	30	–	31	80	80	56	42
	36	–	26	80	73	47	35
	42	–	–	80	62	40	30
	48	–	–	70	54	35	26
102	24	–	31	80	80	66	50
	30	–	25	80	80	53	40
	36	–	–	75	68	44	33
	42	–	–	64	59	38	28
	48	–	–	56	51	33	–
108	24	–	–	80	80	62	47
	30	–	–	73	77	50	37
	36	–	–	61	64	41	31
	42	–	–	52	55	36	27
	48	–	–	46	48	31	–
112	24	–	–	80	80	60	45
	30	–	–	64	75	48	36
	36	–	–	53	62	40	30
	42	–	–	46	53	34	26
	48	–	–	40	47	30	–

LOAD TABLE INSTRUCTIONS:

1. SELECT AN OVERALL SHUTTER SIZE (TOTAL WIDTH & HEIGHT).
2. DETERMINE THE REQUIRED DESIGN WIND PRESSURE FOR THE SHUTTER (OBTAIN FROM A FLORIDA REGISTERED ENGINEER).
3. IF THE SHUTTER HEIGHT IS LESS THAN OR EQUAL TO 76", GO TO "PRESSURE TABLE FOR SINGLE SPAN SHUTTERS" ON SHEET 9 AND COMPARE THE REQUIRED DESIGN PRESSURE TO THE ALLOWABLE PRESSURES IN THE TABLE. IF ALLOWABLE PRESSURE IS EQUAL TO OR GREATER THAN THAT REQUIRED, NO BAR IS REQUIRED & YOU ARE FINISHED. IF ALLOWABLE PRESSURE IS LESS THAN REQUIRED, STORM BAR(S) ARE NEEDED, SO CONTINUE TO NUMBER 4 BELOW.
4. IF BARS ARE REQUIRED, GO TO LOAD TABLES ON THIS SHEET.
5. GO TO APPLICABLE SHUTTER WIDTH IN TABLE AND CHOOSE THE DESIRED BAR SPACING.
6. GO ACROSS THE TABLE AND CHOOSE THE BAR AND CONNECTION WHO'S ALLOWABLE PRESSURE IS GREATER THAN OR EQUAL TO THE REQUIRED PRESSURE. IF THE DESIRED BAR AND/OR CONNECTION TYPE DOES NOT MEET THE REQUIRED SHUTTER DESIGN PRESSURE, CHOOSE ANOTHER BAR SPACING AND CHECK THE BAR TYPE & CONNECTION AGAIN. REPEAT UNTIL DESIRED & CORRECT BAR & CONNECTION TYPE ARE DETERMINED (NOTE THAT THE LESSER PRESSURE OF THE BAR, CONNECTION TYPE, OR MAXIMUM ALLOWABLE OF +/-80 PSF SHALL CONTROL THE SHUTTER).

APPROVED AS COMPLYING WITH THE
SOUTH FLORIDA BUILDING CODE
DATE 03/08/2001
BY Helmy A. Mahr
PRODUCT CONTROL DIVISION
BUILDING CODE COMPLIANCE OFFICE
ACCEPTANCE NO. 00-0411.08

DRAWN BY: W.W.S.	CHECKED BY: W.W.S.
PLOT: 1=1	DATE: 11/17/00

NO.	REVISION DESCRIPTION	BY	DATE

DRAWING TITLE
IMPACT BAHAMA SHUTTERS
(DADE)

MANUFACTURER
FLORIDA SHUTTERS, INC.
1125 COMMERCE AVENUE
VERO BEACH, FL 32960
(561)569-2200

CONSULTANTS
W. W. SCHAEFER ENGINEERING & CONSULTING, P.A.
600 SANDTREE DRIVE; SUITE 203B
PALM BEACH GARDENS, FL 33403
PHONE: 561-775-4902 FAX: 561-775-4903

CERTIFICATION
NOV 20 2000
WARREN W. SCHAEFER, P.E.
P.E. NO. 44135

DRAWING NO. 1001A
REV.
SHEET NO. 10 OF 10