MIAMI-DADE COUNTY, FLORIDA
METRO-DADE FLAGLER BUILDING

BUILDING CODE COMPLIANCE OFFICE
METRO-DADE FLAGLER BUILDING
140 WEST FLAGLER STREET, SUITE 1603
MIAMI, FLORIDA 33130-1563
(305) 375-2901 FAX (305) 375-2908

CONTRACTOR LICENSING SECTION
(305) 375-2527 FAX (305) 375-2558

CONTRACTOR ENFORCEMENT SECTION
(305) 375-2966 FAX (305) 375-2908

PRODUCT CONTROL DIVISION
(305) 375-2902 FAX (305) 372-6339

PRODUCT CONTROL NOTICE OF ACCEPTANCE

Pino-Windows Corporation
6860 N.W. 75 Street
Medley FL 33166

Your application for Product Approval of:
"Colonial" Aluminum Single Hung Window w/True Muntin
under Chapter 8 of the Code of Miami-Dade County governing the use of Alternate Materials and Types of Construction, and completely described herein, has been recommended for acceptance by the Miami-Dade County Building Code Compliance Office (BCCO) under the conditions specified herein.

This approval shall not be valid after the expiration date stated below. BCCO reserves the right to secure this product or material at anytime from a jobsite or manufacturer's plant for quality control testing.
If this product or material fails to perform in the approved manner, BCCO may revoke, modify, or suspend the use of such product or material immediately. BCCO reserves the right to revoke this approval, if it is determined BCCO that this product or material fails to meet the requirements of the South Florida Building Code.

The expense of such testing will be incurred by the manufacturer.

Acceptance No.: 00-0417.06 **(Revises No.: 97-0910.02)**

Expires: 06/26/2003

Raul Rodriguez
Chief Product Control Division

THIS IS THE COVERSHEET, SEE ADDITIONAL PAGES FOR SPECIFIC AND GENERAL CONDITIONS

BUILDING CODE & PRODUCT REVIEW COMMITTEE

This application for Product Approval has been reviewed by the BCCO and approved by the Building Code and Product Review Committee to be used in Dade County, Florida under the conditions set forth above.

Francisco J. Quintana, R.A.
Director
Miami-Dade County
Building Code Compliance Office

Approved: 07/20/2000

Internet mail address: postmaster@buildingcodeonline.com **Homepage: http://www.buildingcodeonline.com**

Pino Windows Corporation

ACCEPTANCE No.: **00-0417.06**

APPROVED : JUL 2 0 2000

EXPIRES : **June 26, 2003**

NOTICE OF ACCEPTANCE: SPECIFIC CONDITIONS

1. SCOPE

1.1 This **revises and renews** the Notice of Acceptance No. 97-0910.02, which was issued on August 02, 1997. It approves an aluminum single hung window as described in Section 2 of this Notice of Acceptance, designed to comply with the South Florida Building Code (SFBC), 1994 Edition for Miami-Dade County, for the locations where the pressure requirements, as determined by SFBC Chapter 23, do not exceed the Design Pressure Rating values indicated in the approved drawings.

2. PRODUCT DESCRIPTION

2.1 The **"Colonial" Aluminum Single Hung Window w/True Muntin** and its components shall be constructed in strict compliance with the following documents: Drawing No **W00-21**, titled "Colonial Alum Single Hung Window", Sheets 1 through 3 of 3, dated 05/19/00, signed and sealed by Humayoun Farooq, P.E., bearing the Miami-Dade County Product Control approval stamp with the Notice of Acceptance number and approval date by the Miami-Dade County Product Control Division. These documents shall hereinafter be referred to as the approved drawings.

3. LIMITATIONS

3.1 This approval applies to single unit applications only, as shown in approved drawings.

3.2 For Design Pressure Rating vs. Window Size, see Design Load Capacity Table in approved drawings.

3.3 Use only the Heavy Duty top rail (Part # PDH-508) with a reinforced lever handle at vent top rail.

4. INSTALLATION

4.1 The aluminum single hung window and its components shall be installed in strict compliance with the approved drawings.

4.2 Hurricane protection system (shutters): the installation of this unit **will require** a hurricane protection system.

5. LABELING

5.1 Each unit shall bear a permanent label with the manufacturer's name or logo, city, state and following statement: "Miami-Dade County Product Control Approved".

6. BUILDING PERMIT REQUIREMENTS

6.1 Application for building permit shall be accompanied by copies of the following:

6.1.1 This Notice of Acceptance

6.1.2 Duplicate copies of the approved drawings, as identified in Section 2 of this Notice of Acceptance, clearly marked to show the components selected for the proposed installation.

6.1.3 Any other documents required by the Building Official or the South Florida Building Code (SFBC) in order to properly evaluate the installation of this system.

Manuel Perez

Manuel Perez, P.E. Product Control Examiner
Product Control Division

Pino Windows Corporation

ACCEPTANCE No.: 00-0417.06

APPROVED : JUL 2 0 2000

EXPIRES : June 26, 2003

NOTICE OF ACCEPTANCE: STANDARD CONDITIONS

1. Renewal of this Acceptance (approval) shall be considered after a renewal application has been filed and the original submitted documentation, including test supporting data, engineering documents, are no older than eight (8) years.

2. Any and all approved products shall be permanently labeled with the manufacturer's name, city, state, and the following statement: "Miami-Dade County Product Control Approved", or as specifically stated in the specific conditions of this Acceptance.

3. Renewals of Acceptance will not be considered if:
   a) There has been a change in the South Florida Building Code affecting the evaluation of this product and the product is not in compliance with the code changes;
   b) The product is no longer the same product (identical) as the one originally approved;
   c) If the Acceptance holder has not complied with all the requirements of this acceptance, including the correct installation of the product;
   d) The engineer who originally prepared, signed and sealed the required documentation initially submitted is no longer practicing the engineering profession.

4. Any revision or change in the materials, use, and/or manufacture of the product or process shall automatically be cause for termination of this Acceptance, unless prior written approval has been requested (through the filing of a revision application with appropriate fee) and granted by this office.

5. Any of the following shall also be grounds for removal of this Acceptance:
   a) Unsatisfactory performance of this product or process.
   b) Misuse of this Acceptance as an endorsement of any product, for sales, advertising or any other purpose.

6. The Notice of Acceptance number preceded by the words Miami-Dade County, Florida, and followed by the expiration date may be displayed in advertising literature. If any portion of the Notice of Acceptance is displayed, then it shall be done in its entirety.

7. A copy of this Acceptance as well as approved drawings and other documents, where it applies, shall be provided to the user by the manufacturer or its distributors and shall be available for inspection at the job site at all time. The engineer need not reseal the copies.

8. Failure to comply with any section of this Acceptance shall be cause for termination and removal of Acceptance.

9. This Notice of Acceptance consists of pages 1, 2 and this last page 3.

Manuel Perez, P. E., Product Control Examiner
Product Control Division

END OF THIS ACCEPTANCE

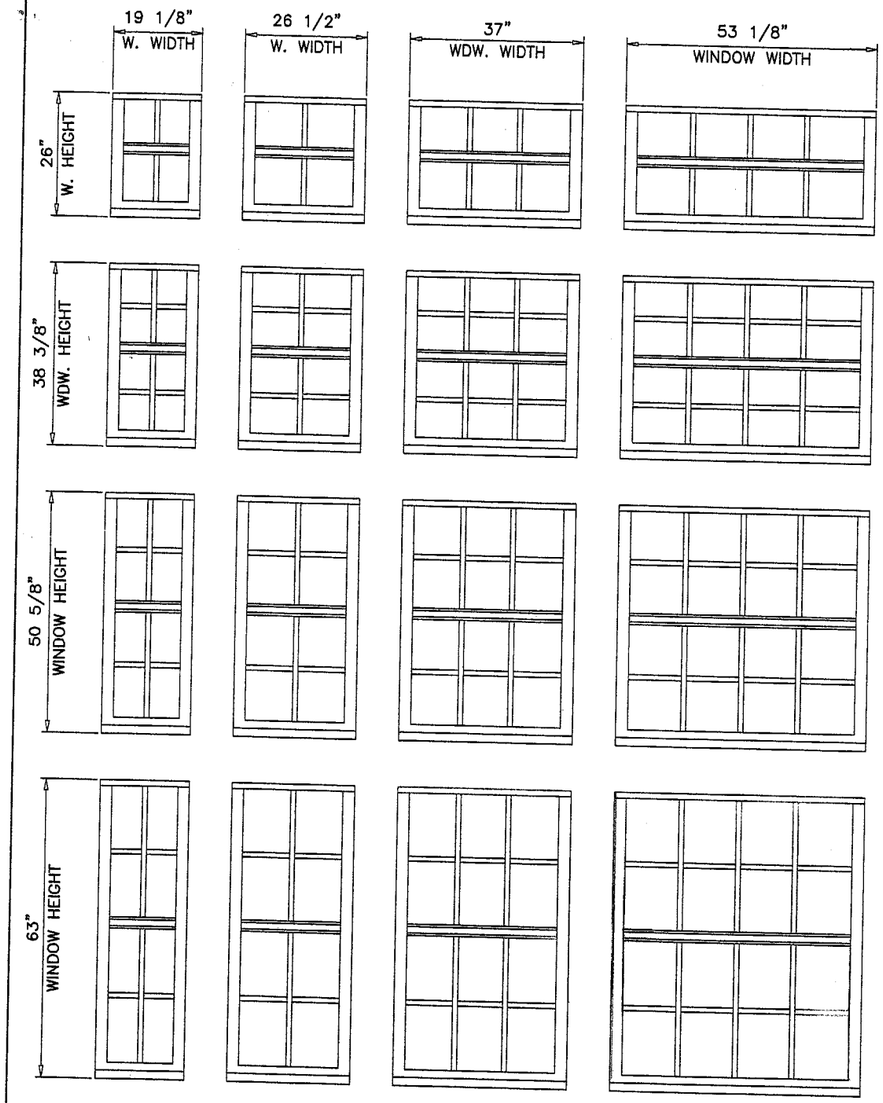

MUNTIN CONFIGURATIONS FOR STANDARD SIZES

DESIGN LOAD CAPACITY – PSF
MIAMI DADE COUNTY APPROVED IMPACT RESISTANT SHUTTERS REQUIRED

WINDOW DIMS.		DSB-ANNEALED GLASS			
		ANCHORS 'A'		ANCHORS 'B'	
WIDTH	HEIGHT	EXT. (+)	INT. (–)	EXT. (+)	INT. (–)
19–1/8"	26" (4)	46.7	68.0	46.7	68.0
26–1/2"		46.7	68.0	46.7	68.0
37"		46.7	68.0	46.7	68.0
53–1/8		46.7	54.9	46.7	54.9
19–1/8"	38–3/8" (4)	46.7	68.0	46.7	68.0
26–1/2"		46.7	68.0	46.7	68.0
37"		46.7	67.3	46.7	68.0
53–1/8		46.7	46.9	46.7	68.0
19–1/8"	50–5/8" (4)	46.7	68.0	46.7	68.0
26–1/2"		46.7	68.0	46.7	68.0
37"		46.7	51.0	46.7	68.0
53–1/8		46.7	35.6	46.7	56.2
19–1/8"	63" (6)	46.7	68.0	46.7	68.0
26–1/2"		46.7	68.0	46.7	68.0
37"		46.7	61.5	46.7	68.0
53–1/8		46.7	42.9	46.7	46.7

* NO. IN PARENTHESIS INDICATE NO. OF ANCHORS PER JAMB.

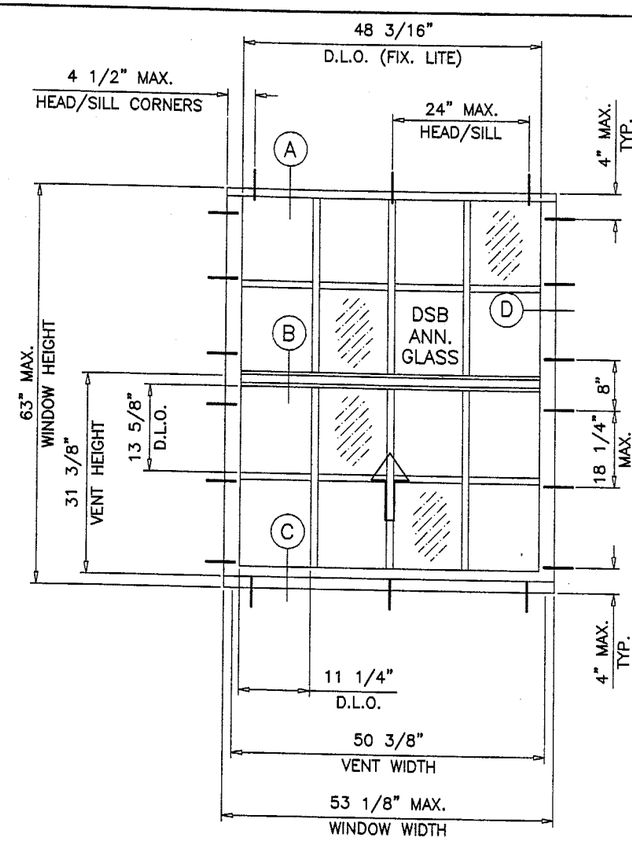

TYPICAL ELEVATION
TESTED UNIT

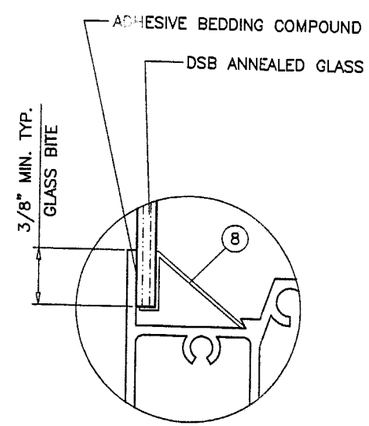

GLAZING DETAIL

NOTES:

1. THIS STRUCTURE IS DESIGNED AS PER THE SOUTH FLORIDA BUILDING CODE 1994 EDITION FOR DADE COUNTY. ALSO FOR WIND LOADS AS PER ASCE 7–88 USING CORRESPONDING LOADS.
2. WOOD BUCKS BY OTHERS, MUST BE ANCHORED PROPERLY TO TRANSFER LOADS TO THE STRUCTURE.
3. ANCHORS SHALL BE AS LISTED, SPACED AS SHOWN ON DETAILS. ANCHOR EMBEDMENT TO BASE MATERIAL SHALL BE BEYOND WALL DRESSING OR STUCCO.

Engr: DR. HUMAYOUN FAROOQ
STRUCTURES
FLA. PE # 16557
JUN 26 2000

APPROVED AS COMPLYING WITH THE SOUTH FLORIDA BUILDING CODE
DATE July 20, 2000
BY Manuel Perez
PRODUCT CONTROL DIVISION
BUILDING CODE COMPLIANCE OFFICE
ACCEPTANCE NO. 00-0417.06

AL-FAROOQ CORPORATION
ENGINEERS, PLANNERS & PRODUCT DESIGN
1235 SW 87 AVE
MIAMI, FLORIDA 33174
TEL. (305) 264-8100 FAX. (305) 262-6978
COMP-ANL\WOO-21PW

COLONIAL ALUMINUM SINGLE HUNG WINDOW

PINO WINDOWS CORPORATION
6860 N.W. 75TH STREET
MEDLEY, FL. 33166
TEL. (305) 888-9946 FAX (305) 888-8079

revisions:

no	date	by	description

date: 05-19-00
scale: 1/2" = 1"
dr. by: HAMID
chk. by:

drawing no.
WOO-21

sheet 1 of 3

WOOD BUCKS NOT BY PINO WINDOWS, MUST SUSTAIN LOADS IMPOSED BY GLAZING SYSTEM AND TRANSFER THEM TO THE BUILDING STRUCTURE.

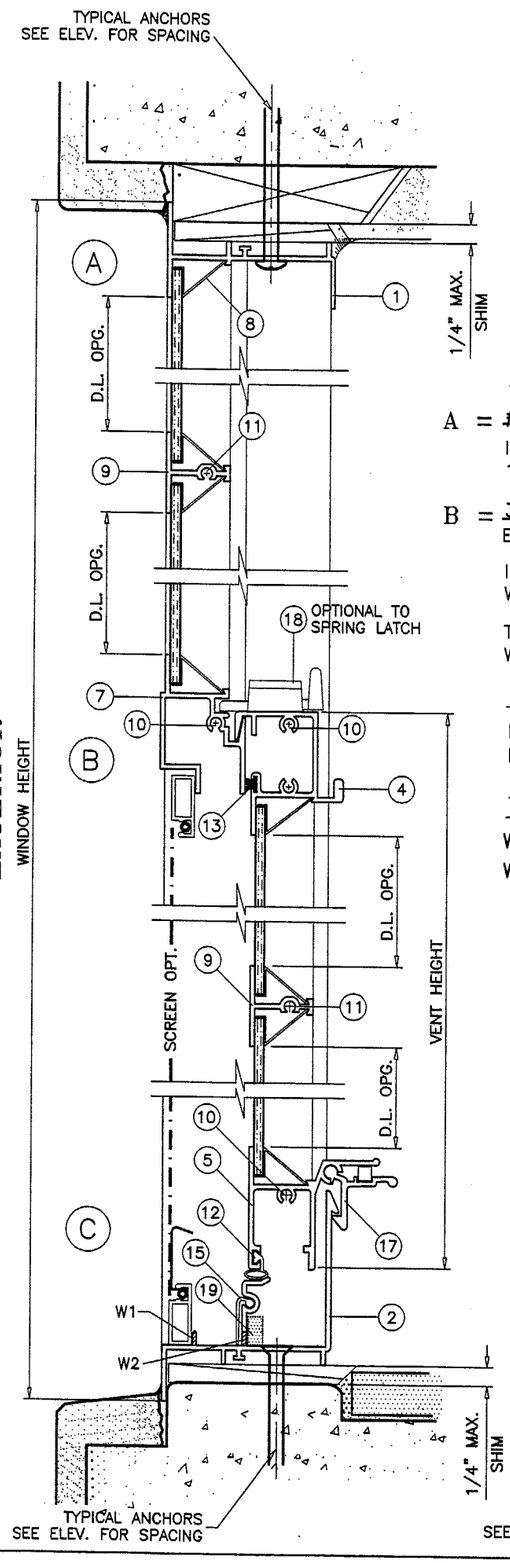

TYPICAL ANCHORS:

A = # 10 SMS

INTO 2BY WOOD BUCKS OR WOOD STRUCTURE
1" MIN. PENETRATION INTO WOOD

B = 3/16" TAPCONS (BY ELCO) OR
EQUIV. CONC. ANCHOR HOLDING CURRENT NOTICE OF ACCEPTANCE.

INTO 2BY WOOD BUCKS OR WOOD STRUCTURE
WITH 1-3/8" MIN. PENETRATION INTO WOOD

THRU WOOD BUCKS INTO MASONRY OR DIRECTLY INTO MASONRY
WITH 1-1/4" MIN. EMBED INTO CONC. OR MASONRY

SEALANTS:

FRAME AND VENT CORNER SEAMS, FIXED MEETING RAIL ENDS, MUNTIN SEAMS AND INSTALLATION SCREWS SEALED WITH SEALANT.

WEEPHOLES:

W1 = 1" NOTCH AT EACH END

W2 = 1-1/2" X 3/16" WEEP HOLE AT EACH END
WITH RIGID PLASTIC FLAP VALVE

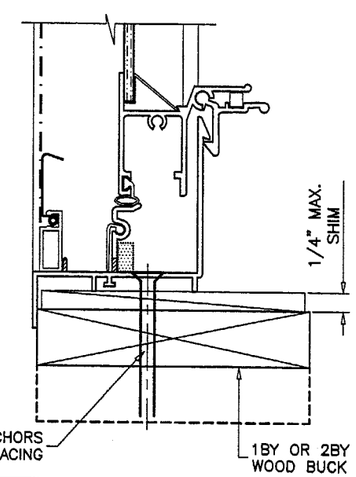

ITEM NO.	PART NUMBER	QUANTITY	DESCRIPTION	MATERIAL	MANF./SUPPLIER/REMARKS
1	PDH-501	1	FRAME HEAD	6063-T5	-
2	PDH-529	1	FRAME SILL	6063-T5	-
3	PDH-503	2	FRAME JAMB	6063-T5	-
4	PDH-508	1	VENT TOP	6063-T5	-
5	PDH-526	1	VENT BOTTOM	6063-T5	-
6	PDH-507	2	VENT SIDE	6063-T5	-
7	PDH-504	1	FIXED MEETING RAIL	6063-T5	-
8	PDH-524	AS REQD.	ROLL FORMED GLAZING BEAD	ALUMINUM	-
9	PDH-512	AS REQD.	MUNTIN	6063-T5	-
10	-	AS REQD.	FRAME & VENT ASSEMBLY SCREW	-	#8 X 3/4" PHPH SMS
11	-	AS REQD.	MUNTIN ASSEMBLY SCREW	-	#8 X 1" PHPH SMS
12	-	AS REQD.	BULB W'STRIPPING	VINYL	-
13	PB-8320-187	AS REQD.	PILE W'STRIPPING	-	WITH INTEGRAL PLASTIC FIN
14	PB-8316-187	AS REQD.	PILE W'STRIPPING	-	WITH INTEGRAL PLASTIC FIN
15	-	2	FLAP VALVE	PLASTIC	-
16	-	2	SPRING AND PULLEY BALANCE	-	-
17	PDH-518	2	SNAP LATCH 4" LONG W/ SPRING	6063-T5	AT EACH END
18	-	2	CAM LOACK AT 12-1/2" FROM ENDS	-	-
19	-	2	2-3/8" X 3/8" FOAM PAD	-	ADHESIVE BACK

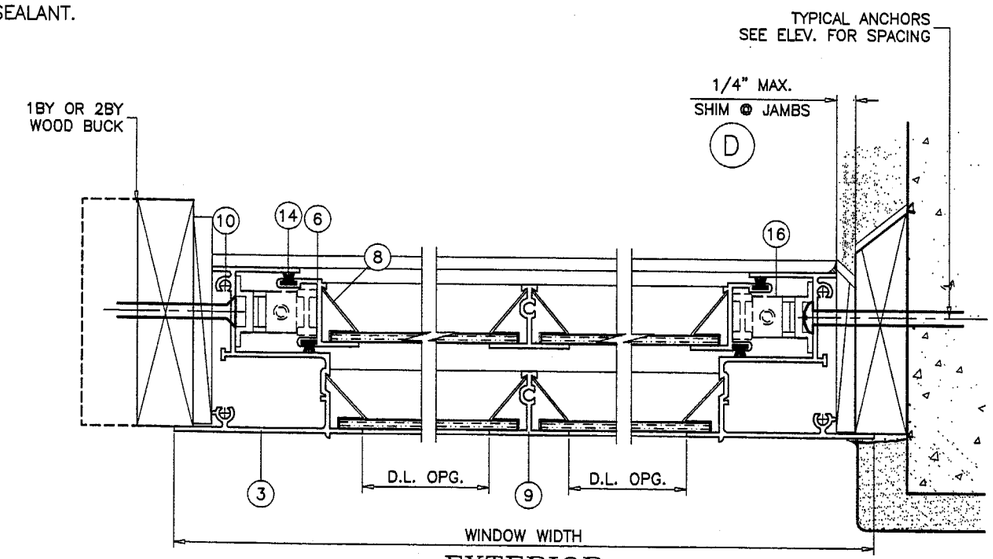

EXTERIOR

Engr: DR. HUMAYOUN FAROOQ
STRUCTURES
FLA. PE # 16557

JUN/16 2000

APPROVED AS COMPLYING WITH THE
SOUTH FLORIDA BUILDING CODE
DATE July 20, 2000
BY Manuel Perez
PRODUCT CONTROL DIVISION
BUILDING CODE COMPLIANCE OFFICE
ACCEPTANCE NO. 00-0417.06

AL-FAROOQ CORPORATION
ENGINEERS, PLANNERS & PRODUCT DESIGN
1235 SW 87 AVE
MIAMI, FLORIDA 33174
TEL. (305) 264-8100 FAX. (305) 262-6978

COMP-ANL\WOO-21PW

COLONIAL ALUMINUM SINGLE HUNG WINDOW

PINO WINDOWS CORPORATION
6860 N.W. 75TH STREET
MEDLEY, FL. 33166
TEL. (305) 888-9946 FAX (305) 888-8079

revisions:		
no	date	by description

date: 05-19-00
scale: 1/2" = 1"
dr. by: HAMID
chk. by:

drawing no.
WOO-21

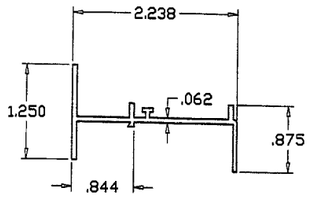

FRAME HEAD

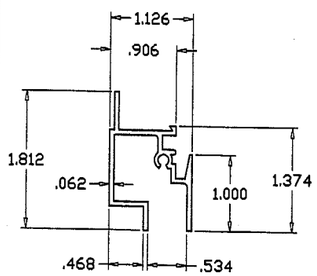

FIXED MEETING RAIL

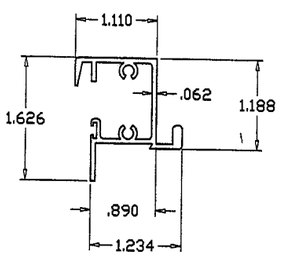

VENT TOP RAIL

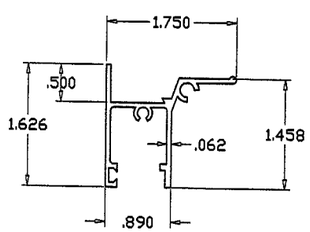

VENT BOTTOM RAIL

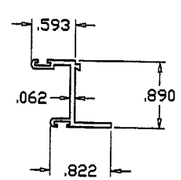

VENT SIDE RAIL

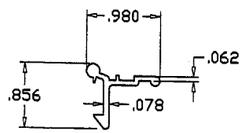

SNAP LATCH

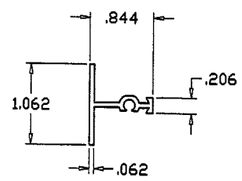

MUNTIN

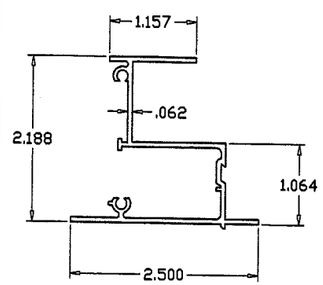

FRAME JAMB

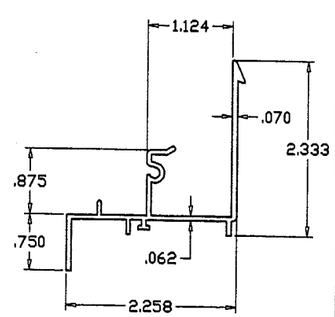

FRAME SILL

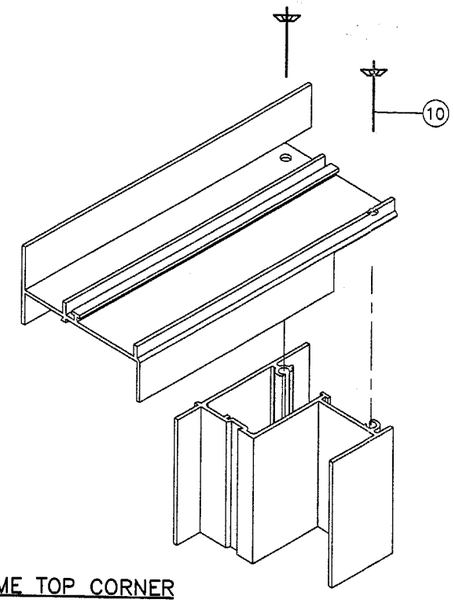

FRAME TOP CORNER

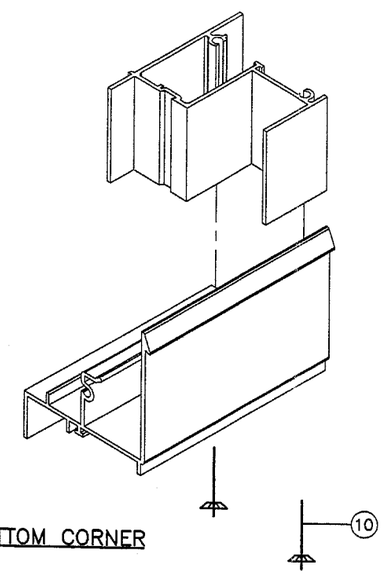

FRAME BOTTOM CORNER

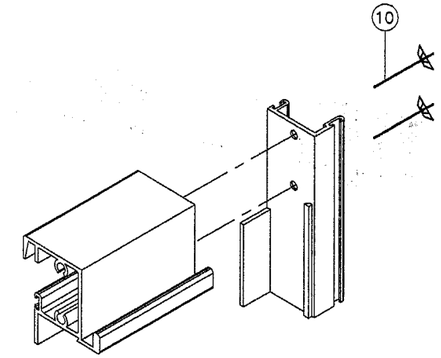

VENT TOP CORNER

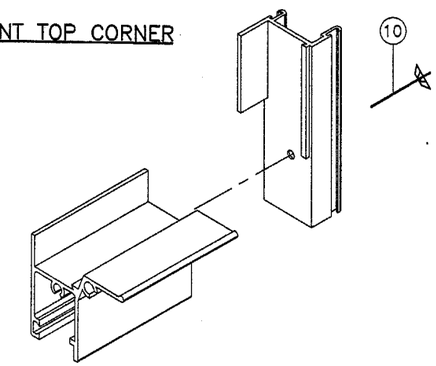

VENT BOTTOM CORNER

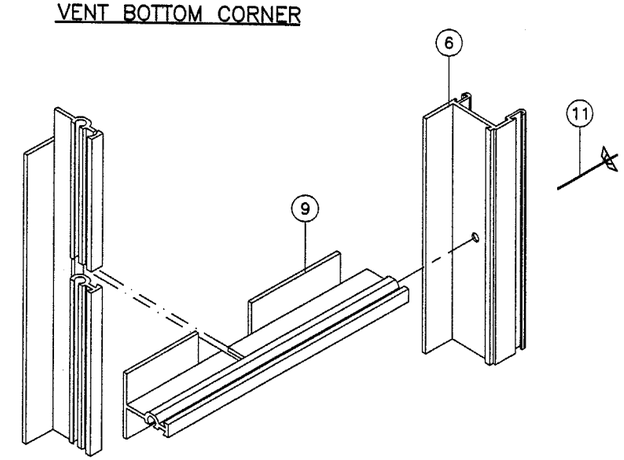

MUNTIN COPING

Engr: DR. HUMAYOUN FAROOQ
STRUCTURES
FLA. PE # 16557

~~JUN 16 2000~~

APPROVED AS COMPLYING WITH THE
SOUTH FLORIDA BUILDING CODE
DATE July 20 2000
BY Manuel Perez
PRODUCT CONTROL DIVISION
BUILDING CODE COMPLIANCE OFFICE
ACCEPTANCE NO. 00-0417.06

AL-FAROOQ CORPORATION
ENGINEERS, PLANNERS & PRODUCT DESIGN
1235 SW 87 AVE
MIAMI, FLORIDA 33174
TEL. (305) 264-8100 FAX. (305) 262-6978

COMP-ANL\WOO-21PW

COLONIAL ALUMINUM SINGLE HUNG WINDOW

PINO WINDOWS CORPORATION
6860 N.W. 75TH STREET
MEDLEY, FL. 33166
TEL. (305) 888-9946 FAX (305) 888-8079

revisions:

no	date	by	description

date: 05-19-00
scale: 1/2" = 1"
dr. by: HAMID
chk. by:

drawing no.
WOO-21

sheet 3 of 3