MIAMI-DADE

MIAMI-DADE COUNTY, FLORIDA
METRO-DADE FLAGLER BUILDING

BUILDING CODE COMPLIANCE OFFICE
METRO-DADE FLAGLER BUILDING
140 WEST FLAGLER STREET, SUITE 1603
MIAMI, FLORIDA 33130-1563
(305) 375-2901 FAX (305) 375-2908

CONTRACTOR LICENSING SECTION
(305) 375-2527 FAX (305) 375-2558

CONTRACTOR ENFORCEMENT DIVISION
(305) 375-2966 FAX (305) 375-2908

PRODUCT CONTROL DIVISION
(305) 375-2902 FAX (305) 372-6339

PRODUCT CONTROL NOTICE OF ACCEPTANCE

Hurst Awning Co., Inc.
5795 N.W. 36 Avenue
Miami ,FL 33142

Your application for Notice of Acceptance (NOA) of:
Roll-Up Shutter
under Chapter 8 of the Code of Miami-Dade County governing the use of Alternate Materials and Types of Construction, and completely described herein, has been recommended for acceptance by the Miami-Dade County Building Code Compliance Office (BCCO) under the conditions specified herein.

This NOA shall not be valid after the expiration date stated below. BCCO reserves the right to secure this product or material at any time from a jobsite or manufacturer's plant for quality control testing. If this product or material fails to perform in the approved manner, BCCO may revoke, modify, or suspend the use of such product or material immediately. BCCO reserves the right to revoke this approval, if it is determined by BCCO that this product or material fails to meet the requirements of the South Florida Building Code.

The expense of such testing will be incurred by the manufacturer.

ACCEPTANCE NO.: 00-0424.04
EXPIRES: 04/25/2006

Raul Rodriguez
Chief Product Control Division

THIS IS THE COVERSHEET, SEE ADDITIONAL PAGES FOR SPECIFIC AND GENERAL CONDITIONS
BUILDING CODE & PRODUCT REVIEW COMMITTEE

This application for Product Approval has been reviewed by the BCCO and approved by the Building Code and Product Review Committee to be used in Miami-Dade County, Florida under the conditions set forth above.

Francisco J. Quintana, R.A.
Director
Miami-Dade County
Building Code Compliance Office

APPROVED: 12/28/2000

Hurst Awning Company, Inc.

ACCEPTANCE No. : **00-0424.04**

APPROVED : DEC 2 8 2000

EXPIRES : **04/25/2006**

NOTICE OF ACCEPTANCE: SPECIFIC CONDITIONS

1. SCOPE

This renews and revises the Notice of Acceptance No. 00-0327.05, which was issued on 05/12/00. It approves an Extruded Aluminum Roll-Up Shutter, as described in Section 2 of this Notice of Acceptance, designed to comply with the South Florida Building Code, 1994 Edition for Miami-Dade County, for the locations where the pressure requirements, as determined by SFBC Chapter 23, do not exceed the Design Pressure Rating values indicated in the approved drawings.

2. PRODUCT DESCRIPTION

This Extruded Aluminum Roll-Up Shutter and its components shall be constructed in strict compliance with the following documents: Drawing No. 96-380, titled "Roll-Up Shutter", prepared by Knezevich & Associates, Inc., dated 08/22/96, last revision #4 dated 10/27/00, sheets 1 through 8 of 8, bearing the Miami-Dade County Product Control Approval and Renewal stamps with the Notice of Acceptance numbers and approval dates by the Miami-Dade County Product Control Division. These documents shall hereinafter be referred to as the approved drawings.

3. LIMITATIONS

All permanent set components, included but not limited to embedded anchor bolts, threaded cones, metal shields, headers and sills, must be protected against corrosion, contamination and damage at all times.

4. INSTALLATION

This Extruded Aluminum Roll-Up Shutter and its components shall be installed in strict compliance with the approved drawings.

5. LABELING

Each unit shall bear a permanent label with the manufacturer's name or logo, city, state and the following statement: "Miami-Dade County Product Control Approved".

6. BUILDING PERMIT REQUIREMENTS

6.1 Application for building permit shall be accompanied by copies of the following:

6.1.1 This Notice of Acceptance.

6.1.2 Duplicate copies of the approved drawings, as identified in Section 2 of this Notice of Acceptance, clearly marked to show the components selected for the proposed installation.

6.1.3 Any other documents required by the Building Official or the South Florida Building Code (SFBC) in order to properly evaluate the installation of this system.

Manuel Perez

Manuel Perez, P.E. - Product Control Examiner
Product Control Division

Hurst Awning Company, Inc.

ACCEPTANCE No. : 00-0424.04

APPROVED : DEC 28 2000

EXPIRES : 04/25/2006

NOTICE OF ACCEPTANCE: STANDARD CONDITIONS

1 Renewal of this Acceptance (approval) shall be considered after a renewal application has been filed and the original submitted documents, including test-supporting data, engineering documents, are no older than eight (8) years.

2. Any and all approved products shall be permanently labeled with the manufacturer's name, city, state, and the following statement: "Miami-Dade County Product Control Approved", or as specifically stated in the specific conditions of this Acceptance.

3. Renewals of Acceptance will not be considered if:
   a. There has been a change in the South Florida Building Code affecting the evaluation of this product and the product is not in compliance with the code changes.
   b. The product is no longer the same product (identical) as the one originally approved.
   c. If the Acceptance holder has not complied with all the requirements of this acceptance, including the correct installation of the product.
   d. The engineer, who originally prepared, signed and sealed the required documentation initially submitted, is no longer practicing the engineering profession.

4. Any revision or change in the materials, use, and/or manufacture of the product or process shall automatically be cause for termination of this Acceptance, unless prior written approval has been requested (through the filing of a revision application with appropriate fee) and granted by this office.

5. Any of the following shall also be grounds for removal of this Acceptance:
   a. Unsatisfactory performance of this product or process.
   b. Misuse of this Acceptance as an endorsement of any product, for sales, advertising or any other purposes.

6. The Notice of Acceptance number preceded by the words Miami-Dade County, Florida, and followed by the expiration date may be displayed in advertising literature. If any portion of the Notice of Acceptance is displayed, then it shall be done in its entirety.

7. A copy of this Acceptance as well as approved drawings and other documents, where it applies, shall be provided to the user by the manufacturer or its distributors and shall be available for inspection at the job site at all time. The engineer needs not reseal the copies.

8. Failure to comply with any section of this Acceptance shall be cause for termination and removal of Acceptance.

9. This Notice of Acceptance consists of pages 1, 2 and this last page 3.

END OF THIS ACCEPTANCE

Manuel Perez

Manuel Perez, P.E. - Product Control Examiner
Product Control Division

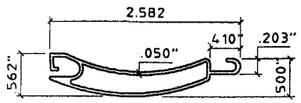

1 ROLL-UP SLAT

HALF SIZE
6063-T6 ALUMINUM ALLOY

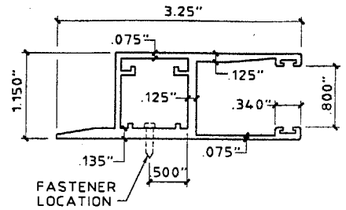

2a ALT. SIDE RAIL

HALF SIZE
6063-T6 ALUMINUM ALLOY

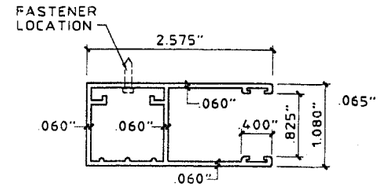

2b ALT. SIDE RAIL

HALF SIZE
6063-T6 ALUMINUM ALLOY
MAX. DESIGN LOAD = + 80 P.S.F.
- 135 P.S.F.

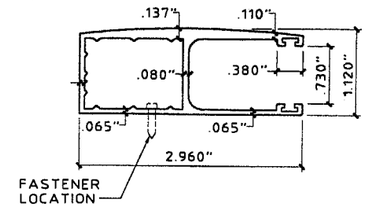

2c ALT. SIDE RAIL

HALF SIZE
6063-T6 ALUMINUM ALLOY

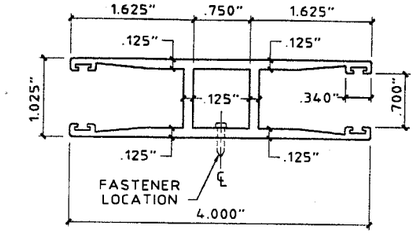

3 SIDE RAIL

HALF SIZE
6063-T6 ALUMINUM ALLOY

INSTRUCTIONS:

DETERMINE ASCE 7-88 WIND LOAD ON OPENING TO BE COVERED WITH ~~A ROLL~~ UP SHUTTER.

DETERMINE THE SLAT SPAN THAT YOU WILL NEED TO COVER THE OPENING.

DETERMINE IF YOU WILL NEED A SINGLE SPAN, DOUBLE SPAN OR THREE OR MORE SPANS TO COVER THE OPENING.

SINGLE SLAT SPANS
FOR A SINGLE SPAN, SEE SCHEDULE "B", ALLOWABLE SLAT SPANS ON PAGE 4. LOCATE THE DESIGN WIND LOAD, AND THEN READ THE ALLOWABLE SLAT SPAN.

STORM BARS
FOR MULTIPLE SPANS, UTILIZING STORM BARS, SEE SCHEDULES F, G & H ON PAGE 6 FOR POSITIVE & NEGATIVE DESIGN WIND LOADS AND STORM BARS. THE LAST ROW OF EACH DESIGN LOAD INDICATES THE MAX. ALLOWABLE SLAT SPAN. UTILIZING THAT OR A LESSER SLAT SPAN, READ SCHEDULE HORIZONTALLY FROM LEFT TO RIGHT, UNTIL YOU FIND A STORM BAR SIZE AND HEIGHT THAT FITS THE OPENING.

MULLIONS
FOR ALLOWABLE SLAT SPANS, UTILIZING A PERMANENT MULLION, SEE SCHEDULE "J" ON PAGE 7. SELECT YOUR DESIGN WIND LOAD. THE LAST ROW OF EACH DESIGN LOAD INDICATES THE MAX. ALLOWABLE SLAT SPAN. UTILIZING THAT DR A LESSER SPAN, READ FROM LEFT TO RIGHT AND SELECT THE PERMANENT MULLION THAT HAS SUFFICIENT HEIGHT FOR YOUR OPENING.

CONNECTIONS
FOR PROPER CONNECTIONS AT THE TOP AND BOTTOM OF STORM BARS AND MULLIONS, SEE SCHEDULE "C" OR "D", PAGE 5. EACH STORM BAR AND MULLION SCHEDULE HAS REACTION LOADS INDICATED ON THE SCHEDULE TO THE RIGHT OF THE ALLOWABLE SPAN. TAKE THAT NUMBER AND ENTER SCHEDULE "C" FOR A TENSION CONNECTION OR SCHEDULE "D" FOR A SHEAR CONNECTION TO DETERMINE THE TYPE AND SIZE OF ANCHOR AS WELL AS THE EMBEDMENT INTO CONCRETE, CONCRETE BLOCK OR WOOD. THIS SCHEDULE WILL ALSO GIVE YOU THE SIZE AND THICKNESS OF THE ALUMINUM ANGLES TO BE USED AS WELL AS THE TEK SCREW ATTACHMENT OF THE ANGLE TO THE STORM BAR.

HEADERS
HEADERS FOR STORM BARS CAN BE FOUND IN SCHEDULE "K" ON PAGE 8. SELECT THE DESIGN WIND LOAD AND ENTER SCHEDULE "K". NOTE THAT THE MAX. ALLOWABLE OPENING HEIGHT IS SHOWN AT THE TOP OF THE SCHEDULE. READ ACROSS FROM LEFT TO RIGHT FROM YOUR DESIGN WIND LOAD UNTIL YOU INTERSECT THE COLUMN THAT SHOWS A HEIGHT EQUAL TO OR GREATER THAN YOUR SELECTED OPENING HEIGHT. SEVERAL HEADER SIZES ARE IN THE SCHEDULE. YOU MAY CHOOSE FROM THE COLUMN THAT BEST MEETS YOUR REQUIREMENTS.

CONNECTIONS FOR HEADERS MAY ALSO BE FOUND IN SCHEDULES "C" AND "D" (SEE REACTIONS FOR HEADERS IN HEADER REACTION SCHEDULE E, PAGE 5.

DEFLECTION
TOTAL DEFLECTION OF THE SLAT WAS CALCULATED AND IT CANNOT EXCEED 2" AND L/30 THE DEFLECTION OF EACH COMPONENT CONTRIBUTES TO THE DEFLECTION OF THE SLAT.

INDEX

SHEET NO.	DESCRIPTION
1	GENERAL NOTES - COMPONENTS
2	SIDE RAIL CONNECTIONS & SECTIONS
3	TYPICAL ELEVATIONS & SECTIONS
4	SLAT SPAN SCHEDULE - HEADER - DRUM SUPPORT
5	ANCHOR SCHEDULE
6	NEGATIVE (EXTERIOR) STORM BAR SCHEDULE POSITIVE (INTERIOR) STORM BAR SCHEDULE
7	PERMANENT MULLION SCHEDULE
8	HEADER SCHEDULE (40 P.S.F. TO 230 P.S.F. DESIGN LOADS)

NOTES:

1. THIS ROLL-UP SHUTTER SYSTEM IS DESIGNED IN ACCORDANCE WITH THE SOUTH FLORIDA BUILDING CODE, 1994 EDITION.
2. POSITIVE AND NEGATIVE DESIGN PRESSURE CALCULATIONS SHALL BE PERFORMED IN ACCORDANCE WITH ASCE 7-88 "MINIMUM DESIGN LOADS FOR BUILDINGS AND OTHER STRUCTURES".
3. ALUMINUM EXTRUSIONS SHALL BE 6063-T6 ALUMINUM ALLOY, U.O.N.
4. EACH SHUTTER ASSEMBLY SHALL BE PERMANENTLY LABELED ON HOOD OR GUIDE RAIL AS FOLLOWS:
   HURST AWNING COMPANY INC.
   MIAMI, FLORIDA
   MIAMI-DADE COUNTY PROD. APPRD.
5. ALL BOLTS AND WASHERS SHALL BE GALVANIZED OR STAINLESS STEEL W/ A MIN. Fy = 33 KSI. POP RIVETS SHALL BE 3/16"Φ 5052 ALUM. ALLOY
6. MATERIAL SPECIFICATIONS NOTED HEREIN ARE THE MANUFACTURER'S REPRESENTATION OF MATERIALS TO BE USED IN PRODUCT TESTING.
7. THE DETAILS AND SPECIFICATIONS SHOWN HEREIN REPRESENT THE PRODUCTS TESTED FOR IMPACT, CYCLIC AND UNIFORM STATIC AIR PRESSURE IN CONFORMANCE W/ MIAMI-DADE COUNTY PROTOCOLS PA 201, 202, AND 203.

   DESIGN IS BASED ON H.E.T.I. TEST REPORTS No. 94-392a AND No. 94-389a.
8. DESIGN CRITERIA FOR MULTIPLE SPANS:
   a. MAXIMUM DEFLECTION OF OUTSIDE HEADERS = L/30
   b. MAXIMUM DEFLECTION OF POSITIVE (INSIDE) STORM BARS = L/30 OR 1" (OPTIONAL) L/30 OR 0.5"
   c. MAXIMUM DEFLECTION OF NEGATIVE (OUTSIDE) STORM BARS = L/30
   d. MAXIMUM DEFLECTION OF SLATS = L/30 OR 2"
   e. MAXIMUM DEFLECTION OF MULLIONS = L/180

STORM BAR, HEADER, MULLION, BUILD-OUT AND ANGLE MEMBER - SCHEDULE A

MEMBER MARK	MEMBER TYPE	W (INCHES)	L (INCHES)	Tf (INCHES)	Tw (INCHES)	2" x 1/8" AL. STRAP REQUIRED
4	A	2	2	.125	.125	
5	A	2	3	.125	.125	
6	B	2	3	.125	.125	YES *
7	A	2	4	.125	.125	
8	B	2	4	.125	.125	YES *
10	A	2	5	.125	.125	
11	B	2	5	.125	.125	YES *
12	A	2	6	.125	.125	
13	B	2	6	.125	.125	YES *
14	A	2	8	.125	.125	
15	B	2	8	.125	.125	YES *
17	ANGLE	2 MIN.	2 MIN.	.125	.125	
18	ANGLE	2 MIN.	2 MIN.	.250	.250	

* ONE CONTINUOUS STRAP REQUIRED ON THE OUTSIDE SURFACE OF OUTSIDE STORM BAR ONLY.

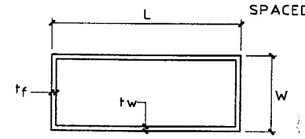

BOX BEAM (TYPE A)

4 5 7 10 12 14

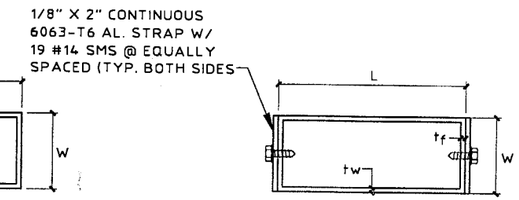

BOX BEAM W/ STRAP (TYPE B)

6 8 11 13 15

A MEMBER SCHEDULE

SCALE: 3" = 1'-0"
6063-T6 ALUMINUM ALLOY

APPROVED AS COMPLYING WITH THE SOUTH FLORIDA BUILDING CODE
DATE Manuel Sirez
BY December 28, 2000
PRODUCT CONTROL DIVISION
BUILDING CODE COMPLIANCE OFFICE
ACCEPTANCE NO. 00-0424.04

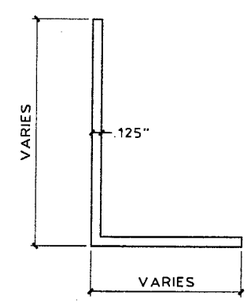

17 ANGLE

HALF SIZE
6063-T6 ALUMINUM ALLOY

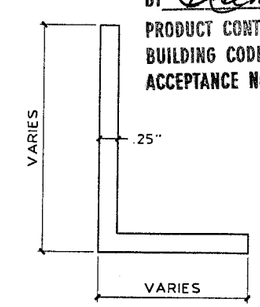

18 ANGLE

HALF SIZE
6063-T6 ALUMINUM ALLOY

KNEZEVICH & ASSOCIATES, INC.
CONSULTING ENGINEERS • PRODUCT TESTING
1260 N. UNIVERSITY DRIVE, SUITE 180 • FORT LAUDERDALE, FL 33322
TEL: (954) 382-2800 • FAX: (954) 382-2989 • FLORIDA COA #3205
WEBSITE: WWW.KNEZEVICH.COM • E-MAIL: KA@KNEZEVICH.COM

COPYRIGHT © 2000 KNEZEVICH & ASSOCIATES, INC.

ROLL-UP SHUTTER

HURST AWNING COMPANY, INC.
MANUFACTURERS OF HURRICANE & SECURITY PROTECTION PRODUCTS
"QUALITY SERVICE SINCE 1957"
4665 N.W. 37 AVENUE
MIAMI, FLORIDA 33142
PH: (305) 635-0900 / (800) 327-0905 FAX: (305) 634-9078

revisions

no	date	by	description
1	08/22/96		RENEWAL OF 95-51
2	08/01/97	GG	REV. DETAIL A & B PG4
3	03/29/00	RD	GENERAL REVISIONS
4	10/27/00	ZS	BCCO COMMENTS

V.J. KNEZEVICH
PROFESSIONAL ENGINEER
FL License No: PE 0010283

NOV 10 2000

date 08/22/96	
scale AS NOTED	drawn by GG
design by VJK	checked by VJK

drawing no.
96-380

sheet 1 of 8

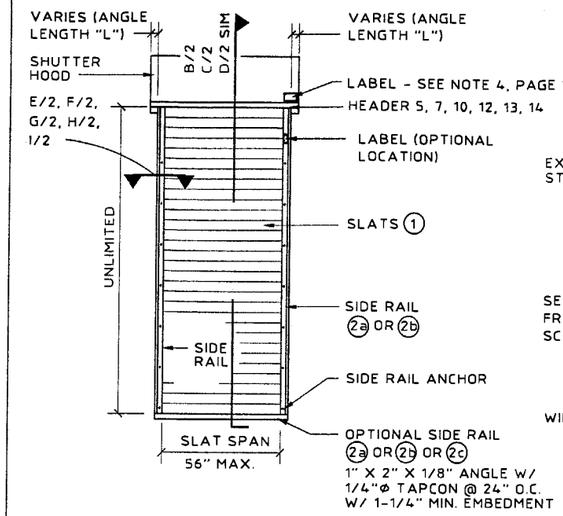

(A) ELEVATION OF SINGLE SPAN CONDITION
N.T.S.

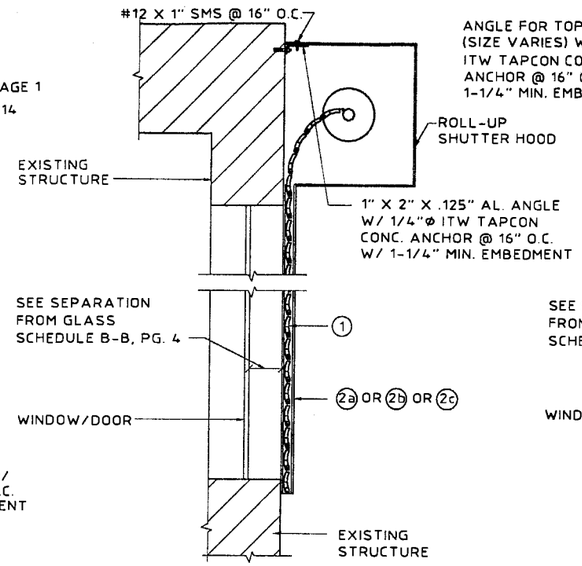

(B) WALL MOUNT SECTION
SCALE : 3/4" = 1'-0"

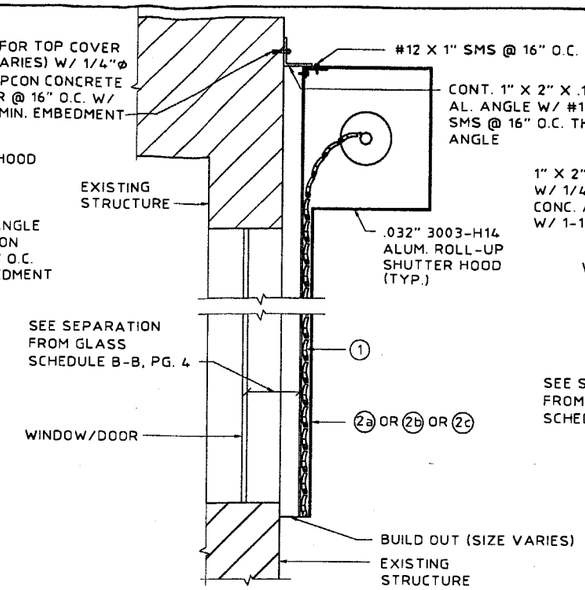

(C) BUILD OUT SECTION
SCALE : 3/4" = 1'-0"

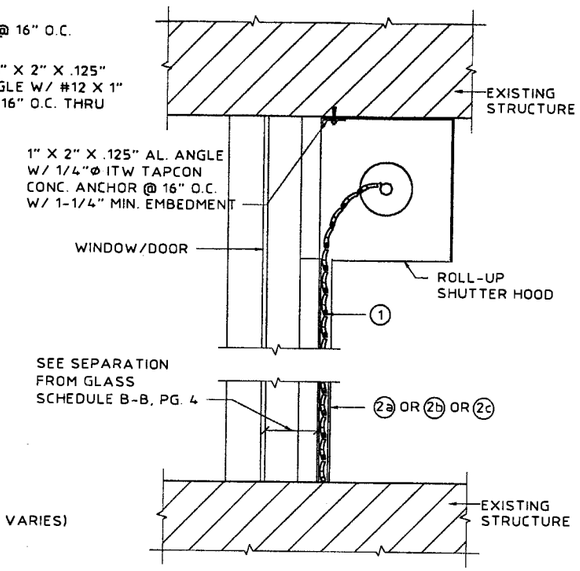

(D) INSIDE MOUNT SECTION
SCALE : 3/4" = 1'-0"

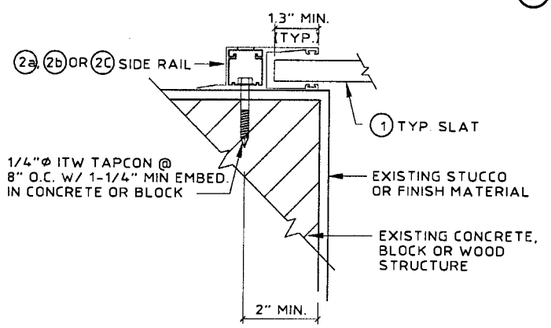

(E) WALL MOUNT (PLAN)
SCALE : 3" = 1'-0"

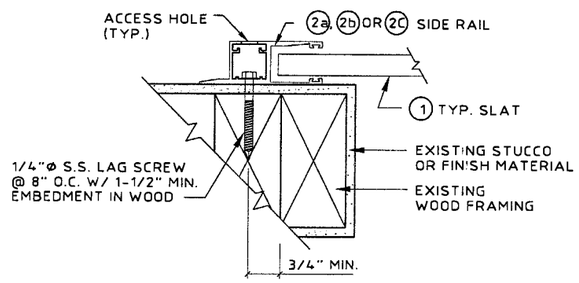

(F) WOOD FRAME WALL MOUNT (PLAN)
SCALE : 3" = 1'-0"

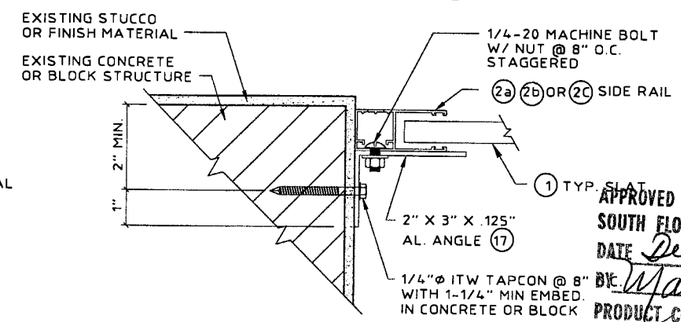

(G) INSIDE MOUNT (PLAN)
SCALE : 3" = 1'-0"

APPROVED AS COMPLYING WITH THE SOUTH FLORIDA BUILDING CODE
DATE December 28, 2000
BY: Manuel Perez
PRODUCT CONTROL DIVISION
BUILDING CODE COMPLIANCE OFFICE
ACCEPTANCE NO. 00-0424.04

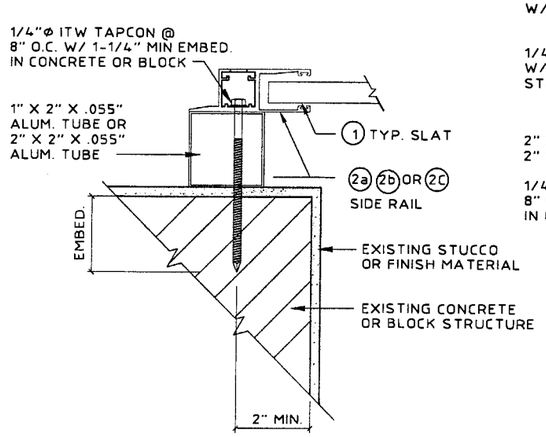

(H) BUILD-OUT MOUNT (PLAN)
SCALE : 3" = 1'-0"

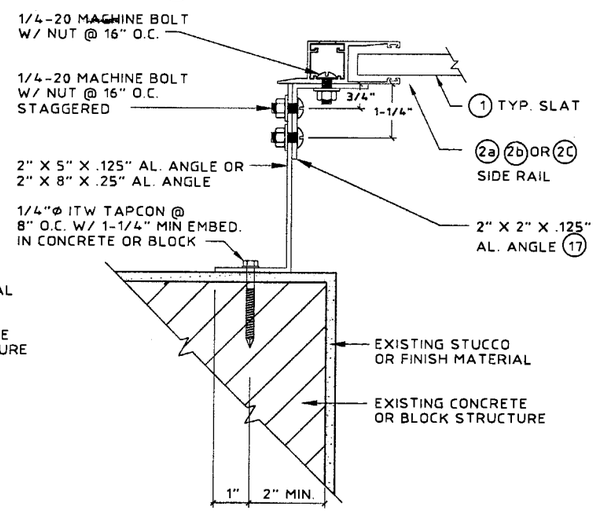

(I) BUILD-OUT MOUNT (PLAN)
SCALE : 3" = 1'-0"

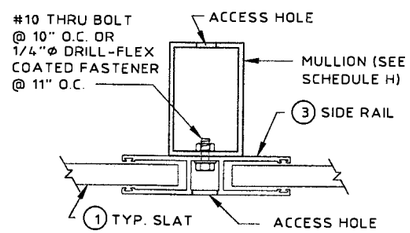

(J)

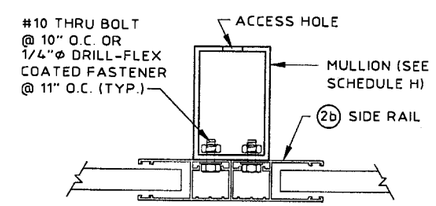

(K)

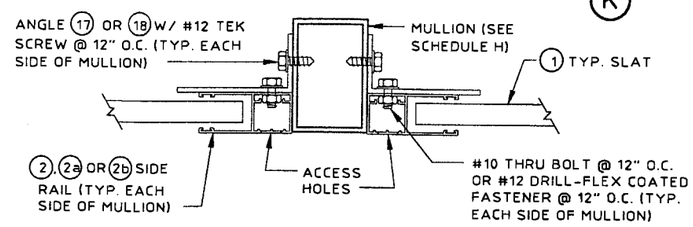

(L) SIDE RAIL TO MULLION DETAILS
SCALE : 3" = 1'-0"

KNEZEVICH & ASSOCIATES, INC.
CONSULTING ENGINEERS • PRODUCT TESTING
1260 N. UNIVERSITY DRIVE, SUITE 180 • FORT LAUDERDALE, FL 33322
TEL: (954) 382-2800 • FAX: (954) 382-2989 • FLORIDA COA #3205
WEBSITE: WWW.KNEZEVICH.COM • E-MAIL: KA@KNEZEVICH.COM

COPYRIGHT © 2000 KNEZEVICH & ASSOCIATES, INC.

ROLL-UP SHUTTER

HURST
"QUALITY SERVICE SINCE 1957"
MANUFACTURERS OF HURRICANE & SECURITY PROTECTION PRODUCTS
6865 NW 36th AVENUE
MIAMI, FLORIDA 33147
PH: (305) 635-0900 • (800) 327-0005 • FAX: (305) 634-9078

revisions

no	date	by	description
1	08/22/96		RENEWAL OF 95-51
2	08/01/97	GG	REV. DETAIL A & B PG4
3	03/29/00	MD	GENERAL REVISIONS
4	10/27/00	ZS	BCCO COMMENTS

V.J. KNEZEVICH
PROFESSIONAL ENGINEER
FL License No: PE 0070983

NOV 10 2000

date 08/22/96	
scale AS NOTED	drawn by GG
design by VJK	checked by VJK

drawing no. 96-380

sheet 2 of 8

10/27/00 13:00

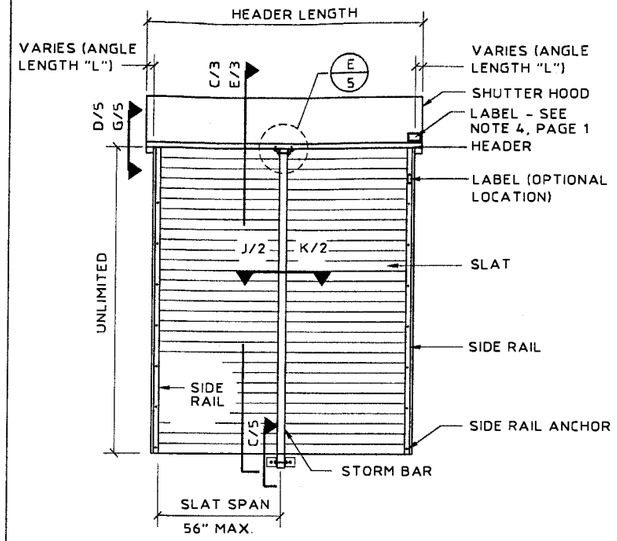

Ⓐ WALL MOUNT & BUILD OUT ELEVATION

N.T.S.

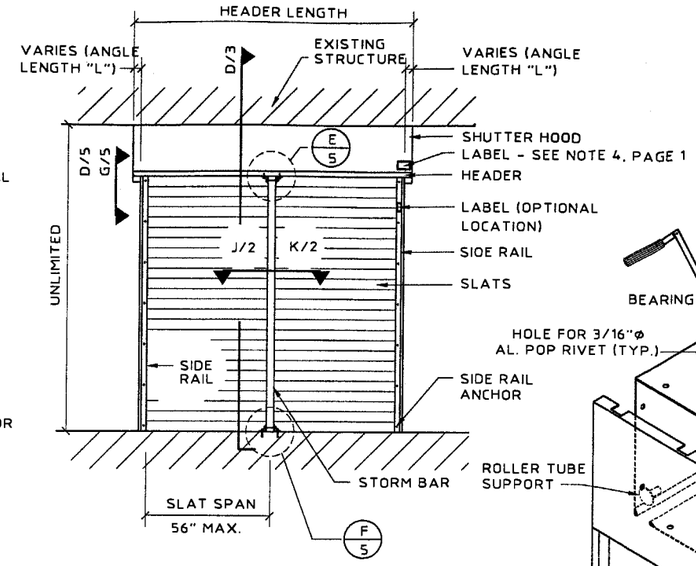

Ⓑ INSIDE MOUNT ELEVATION

N.T.S.

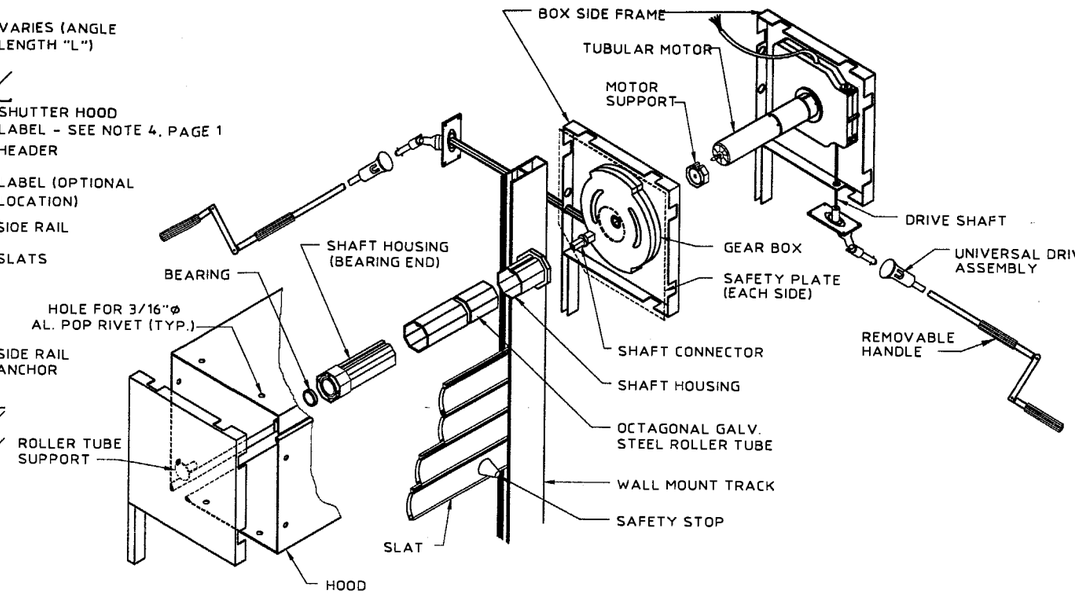

ISOMETRIC OF CAST HEADER ASSEMBLY

N.T.S.

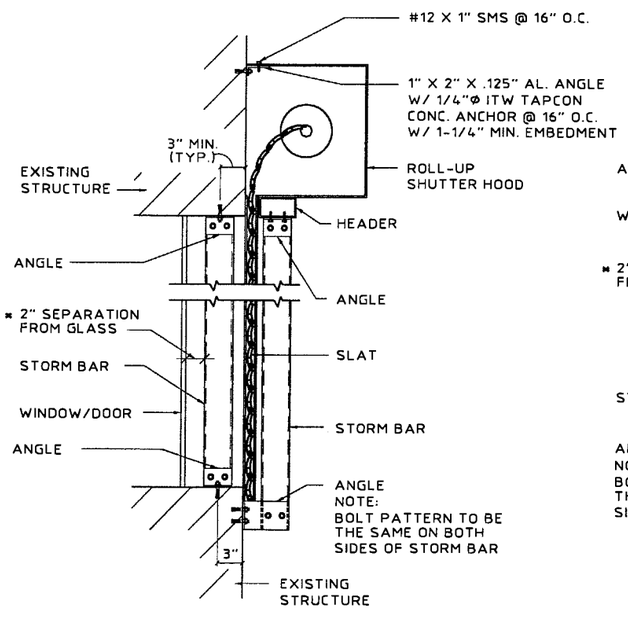

Ⓒ WALL MOUNT SECTION W/ STORM BAR

SCALE : 3/4" = 1'-0"

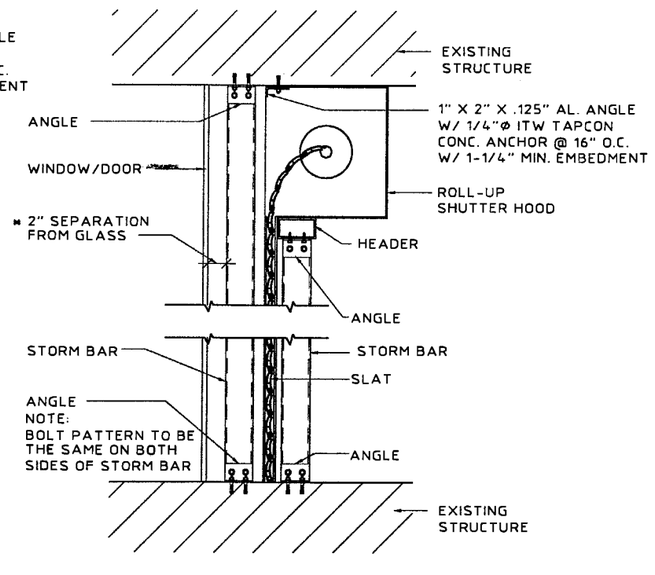

Ⓓ INSIDE MOUNT SECTION W/ STORM BAR

SCALE : 3/4" = 1'-0"

* 1-1/2" SEPARATION MAY BE USED WHEN POSITIVE LOADED STORM BARS FROM SCHEDULE G ARE USED

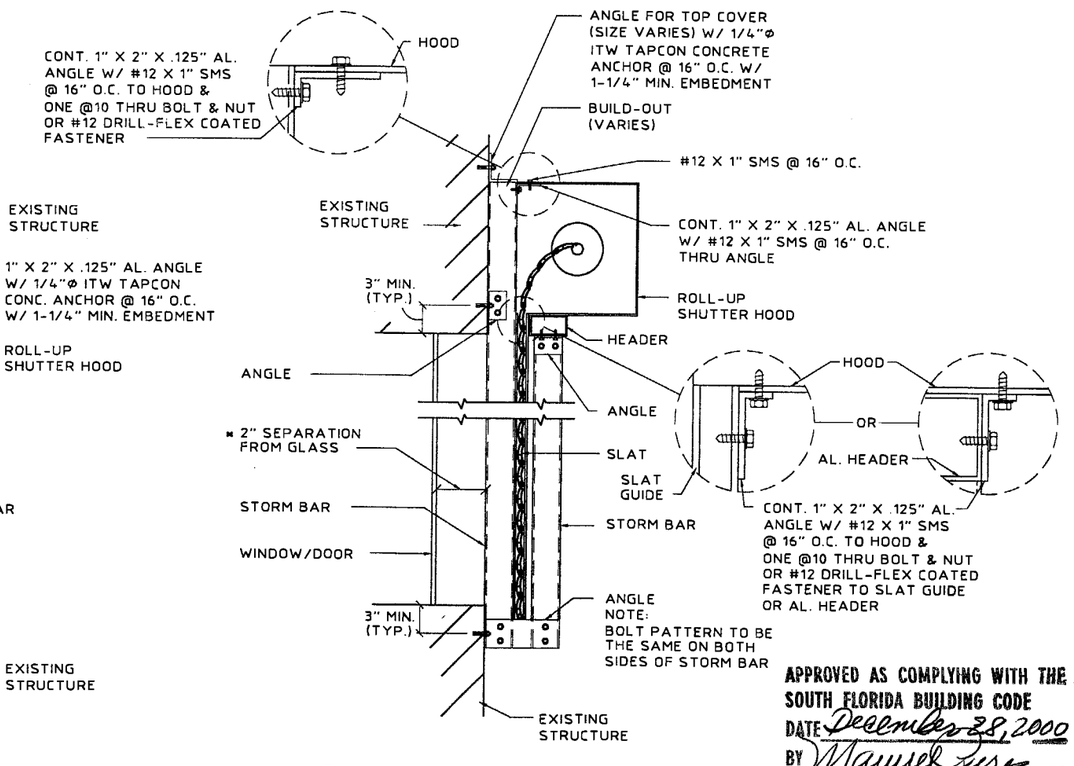

Ⓔ BUILD-OUT SECTION W/ STORM BAR

SCALE : 3/4" = 1'-0"

APPROVED AS COMPLYING WITH THE SOUTH FLORIDA BUILDING CODE
DATE December 28, 2000
BY Manuel Sirio
PRODUCT CONTROL DIVISION
BUILDING CODE COMPLIANCE OFFICE
ACCEPTANCE NO. 00-0424.04

KNEZEVICH & ASSOCIATES, INC.
CONSULTING ENGINEERS • PRODUCT TESTING
1260 N. UNIVERSITY DRIVE, SUITE 180 • FORT LAUDERDALE, FL 33322
TEL: (954) 382-2800 • FAX: (954) 382-2989 • FLORIDA COA #3205
WEBSITE: WWW.KNEZEVICH.COM • E-MAIL: KA@KNEZEVICH.COM

COPYRIGHT © 2000 KNEZEVICH & ASSOCIATES, INC.

ROLL-UP SHUTTER

HURRICANE ALUMINUM AWNING COMPANY, INC.
"QUALITY SERVICE SINCE 1957"
MANUFACTURERS OF HURRICANE & SECURITY PROTECTION PRODUCTS
6865 NW 36th AVENUE
MIAMI, FLORIDA 33147
PH: (305) 635-0900 / (800) 327-0005 FAX: (305) 634-9078

revisions

no	date	by	description
1	08/22/96		RENEWAL OF 95-51
2	08/01/97	GG	REV. DETAIL A & B PG4
3	03/29/00	MD	GENERAL REVISIONS
4	10/27/00	ZS	BCCO COMMENTS

V.J. KNEZEVICH
PROFESSIONAL ENGINEER
FL License No: PE 0010983

NOV 1 0 2000

date 08/22/95	
scale AS NOTED	drawn by GG
design by VJK	checked by VJK

drawing no. 96-380

sheet 3 of 8

10/27/00 13:01

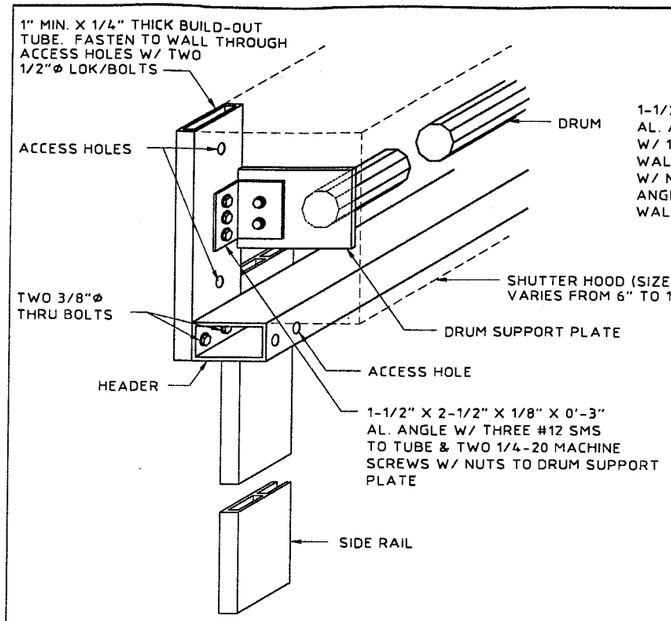

Ⓐ DRUM SUPPORT & HEADER TO BUILD-OUT DETAIL

SCALE : 1-1/2" = 1'-0"

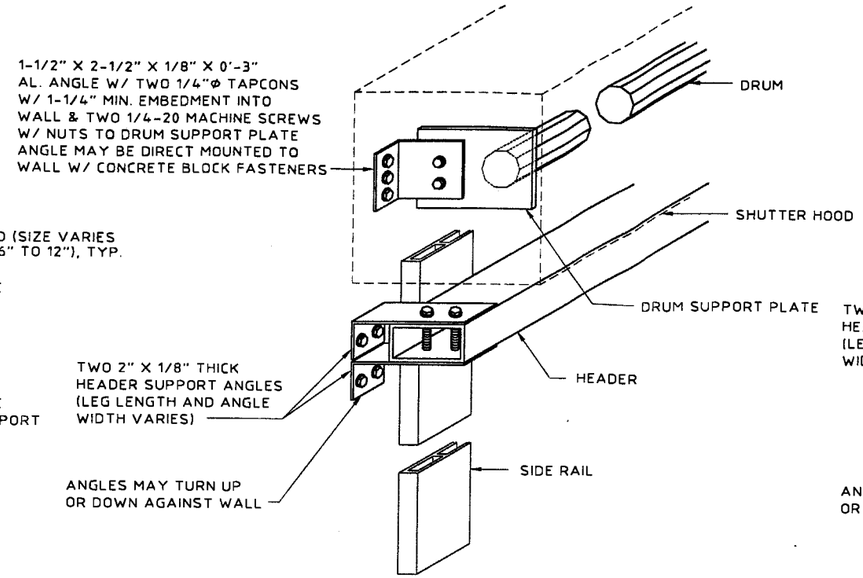

Ⓑ ALT. DRUM SUPPORT & HEADER TO WALL DETAIL

SCALE : 1-1/2" = 1'-0"

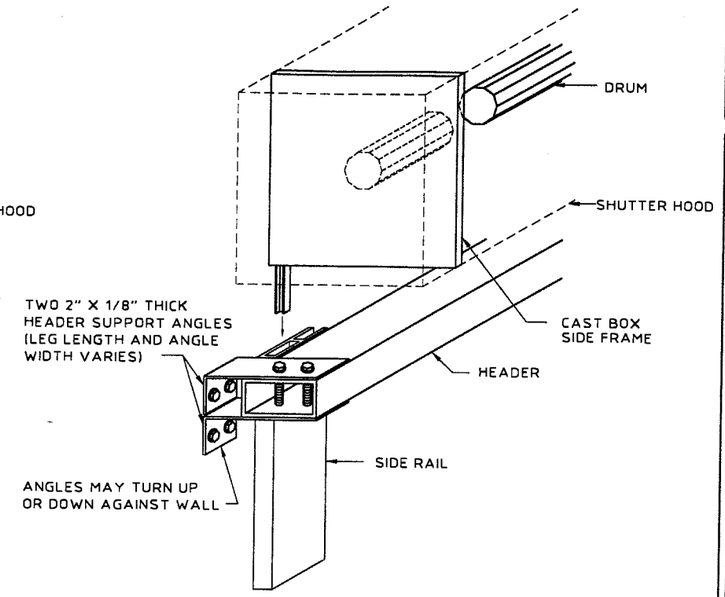

Ⓒ CAST DRUM SUPPORT & HEADER DETAIL

SCALE : 1-1/2" = 1'-0"

SLAT SPAN - SCHEDULE B

✱ FOR INSTALLATIONS ≤ 30'-0" ABOVE GRADE FOR SLAT SPANS < 42" SEPARATION FROM GLASS SHALL BE 3" MIN.
FOR SLAT_SPANS > 42" < 56" SEPARATION FROM GLASS SHALL BE 3.25" MIN.

FOR INSTALLATIONS > 30'-0" ABOVE GRADE USE MIN. SEPARATION FROM GLASS INDICATED IN SCHEDULE BELOW.

NEGATIVE DESIGN LOAD (P.S.F.)	SINGLE SPAN	MIN. SEPARATION FROM GLASS > 30'	TWO (2) SPANS	MIN. SEPARATION FROM GLASS > 30'	THREE (3) OR MORE SPANS	MIN. SEPARATION FROM GLASS > 30'
	TOTAL SLAT SPAN (FT-IN)		TOTAL SLAT SPAN (FT-IN)		TOTAL SLAT SPAN (FT-IN)	
60.0	4 - 8	✱	4 - 8	✱	4 - 8	✱
70.0	4 - 6	✱	4 - 8	✱	4 - 8	✱
80.0	4 - 3	✱	4 - 5	✱	4 - 8	✱
90.0	4 - 1	2.96	4 - 2	1.93	4 - 6	2.47
100.0	4 - 0	2.78	4 - 0	1.86	4 - 3	2.34
110.0	3 - 9	2.64	3 - 9	1.80	4 - 1	2.24
120.0	3 - 7	2.52	3 - 7	1.75	3 - 11	2.15
130.0	3 - 6	2.42	3 - 6	1.70	3 - 9	2.08
140.0	3 - 4	2.33	3 - 4	1.67	3 - 7	2.01
150.0	3 - 3	2.25	3 - 3	1.64	3 - 6	1.96
160.0	3 - 2	2.19	3 - 2	1.61	3 - 5	1.91
170.0	3 - 0	2.13	3 - 0	1.59	3 - 3	1.87
180.0	2 - 11	2.08	2 - 11	1.56	3 - 2	1.83
190.0	2 - 10	2.03	2 - 10	1.55	3 - 1	1.80
200.0	2 - 9	1.99	2 - 9	1.53	3 - 0	1.77
210.0	2 - 9	1.95	2 - 9	1.51	2 - 11	1.74
220.0	2 - 8	1.92	2 - 8	1.50	2 - 11	1.72
230.0	2 - 7	1.89	2 - 7	1.49	2 - 10	1.70

NOTE: INTERPOLATE FOR SLAT SPANS AND DEFLECTION BETWEEN THOSE SHOWN.

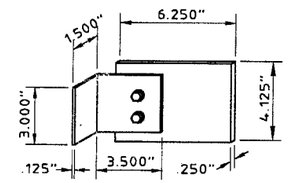

DRUM SUPPORT PLATE DETAIL

SCALE : 1-1/2" = 1'-0"

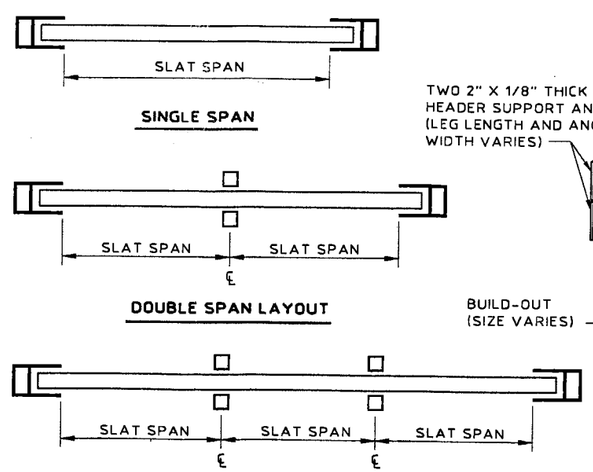

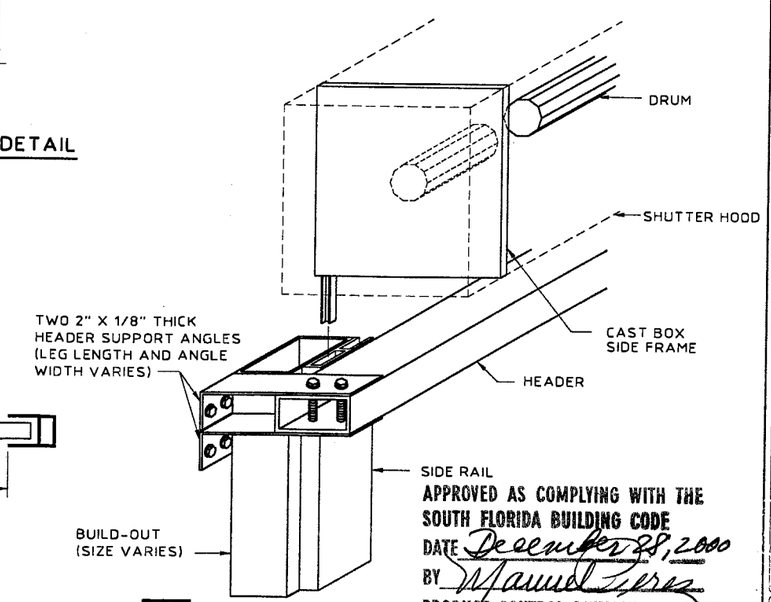

APPROVED AS COMPLYING WITH THE SOUTH FLORIDA BUILDING CODE
DATE December 28, 2000
BY Manuel Perez
PRODUCT CONTROL DIVISION
BUILDING CODE COMPLIANCE OFFICE
ACCEPTANCE NO. 00-0424.04

Ⓓ CAST DRUM SUPPORT & HEADER DETAIL W/ BUILD-OUT

SCALE : 1-1/2" = 1'-0"

KNEZEVICH & ASSOCIATES, INC.
CONSULTING ENGINEERS • PRODUCT TESTING
1260 N. UNIVERSITY DRIVE, SUITE 180 • FORT LAUDERDALE, FL 33322
TEL: (954) 382-2800 • FAX: (954) 382-2989 • FLORIDA COA #3205
WEBSITE: WWW.KNEZEVICH.COM • E-MAIL: KA@KNEZEVICH.COM

COPYRIGHT © 2000 KNEZEVICH & ASSOCIATES, INC.

ROLL-UP SHUTTER

HURST
ALUMINUM CORPORATION
"QUALITY SERVICE SINCE 1957"
MANUFACTURERS OF HURRICANE & SECURITY PROTECTION PRODUCTS
6865 NW 36th AVENUE
MIAMI, FLORIDA 33147
PH: (305) 635-0900 / (800) 327-9903 FAX: (305) 634-9078

revisions

no	date	by	description
1	08/22/96		RENEWAL OF 95-51
2	08/01/97	GG	REV. DETAIL A & B PG4
3	03/29/00	MD	GENERAL REVISIONS
4	10/27/00	ZS	BCCO COMMENTS

V.J. KNEZEVICH
PROFESSIONAL ENGINEER
FL License No: PE 0016983

NOV 10 2000

date 08/22/96	
scale AS NOTED	drawn by GG
design by VJK	checked by VJK

drawing no. 96-380

sheet 4 of 8

10/27/00 13:01

Block B
Concrete C

ANCHOR AND FASTENER - SCHEDULE C

POWERS/RAWL LOK/BOLT -**TENSION** IN CONCRETE OR BLOCK
POWERS/RAWL CALK-IN - **TENSION** IN CONCRETE OR BLOCK

ANCHOR TYPE	MATERIAL TYPE	STORM BAR & MULLION REACTION (POUNDS)	WALL MOUNT				ANGLE DIMENSIONS		STORM BAR, MULLION OR HEADER TO ANGLES	
			DIAMETER (INCHES)	EMBEDMENT DISTANCE (INCHES)	QUANTITY OF FASTENERS PER ANGLE	CONCRETE OR BLOCK EDGE DISTANCE (INCHES)	THICKNESS OF TWO (2) ANGLES (INCHES)	MIN. (L) LENGTH OF EACH ANGLE (INCHES)	NO. OF TEK SCREWS EA. LEG EACH ANGLE	SIZE OF TEK SCREWS
LOK/BOLT	B	600	0.250	1.125	1	3.0	0.125	3.00	2	#12
CALK-IN	B	850	0.375	1.250	1	4.5	0.125	4.08	3	#12
LOK/BOLT	B	1200	0.250	1.125	2	3.0	0.125	5.76	3	#12
LOK/BOLT	B	1200	0.250	1.125	2	3.0	0.250	4.00	3	#12
CALK-IN	B	1700	0.375	1.250	2	4.5	0.250	5.25	3	#12
LOK/BOLT	C	2700	0.375	1.625	2	4.5	0.250	5.25	4	#14
CALK-IN	C	4810	0.375	1.250	2	4.5	0.250	11.50	6	#14
LOK/BOLT	C	5015	0.500	2.250	2	6.0	0.250	11.50	7	#14

Block B
Concrete C

ANCHOR AND FASTENER - SCHEDULE D

POWERS/RAWL LOK/BOLT - **SHEAR** IN CONCRETE OR BLOCK
POWERS/RAWL CALK-IN - **SHEAR** IN CONCRETE OR BLOCK

ANCHOR TYPE	MATERIAL TYPE	STORM BAR & MULLION REACTION (POUNDS)	WALL MOUNT				ANGLE DIMENSIONS		STORM BAR, MULLION OR HEADER TO ANGLES	
			DIAMETER (INCHES)	EMBEDMENT DISTANCE (INCHES)	QUANTITY OF FASTENERS PER ANGLE	CONCRETE OR BLOCK EDGE DISTANCE (INCHES)	THICKNESS OF TWO (2) ANGLES (INCHES)	MIN. (L) LENGTH OF EACH ANGLE (INCHES)	NO. OF TEK SCREWS EA. LEG EACH ANGLE	SIZE OF TEK SCREWS
LOK/BOLT	B	318	0.250	1.125	2	1.25	0.125	SEE DETAIL (B) SHEET 5 of 8 FOR L	2	#12
LOK/BOLT	B	635	0.250	1.125	4	1.25	0.125		3	#12
LOK/BOLT	B	1270	0.250	1.125	2	3.00	0.125		3	#12
LOK/BOLT	C	1625	0.375	1.625	1	4.50	0.125		3	#12
CALK-IN	C	1800	0.375	.875	2	3.00	0.125		3	#12
LOK/BOLT	C	3250	0.375	1.625	2	4.50	0.125		5	#14
CALK-IN	C	4220	0.375	1.250	2	4.50	0.125		6	#14
LOK/BOLT	C	5800	0.375	1.625	4	4.50	0.125		8	#14

NUMBER OF STORM BARS	HEADER REACTION DETERMINATION SCHEDULE E HEADER REACTION EACH END (POUNDS)
1	0.5 X ONE STORM BAR END REACTION
2	1.0 X ONE STORM BAR END REACTION
3 OR MORE	1.5 X ONE STORM BAR END REACTION

SEE SCHEDULE C & D ABOVE FOR ANGLE, ANCHOR AND FASTENER QUANTITY AND SIZE.

WOOD FASTENING NOTES:

GALVANIZED STEEL OR 410 STAINLESS STEEL W/ FLUOROCARBON COATING LAG SCREW FOR WOOD, MAY BE USED AT LOADS, QUANTITY & EMBEDMENT INDICATED FOR BLOCK OR CONCRETE. EMBEDMENT SHALL BE AT THE CENTER OF A PRIMARY FRAMING MATERIAL SUCH AS A 2 X WOOD STUD OR A 2 X WOOD HEADER OR SILL PLATE.

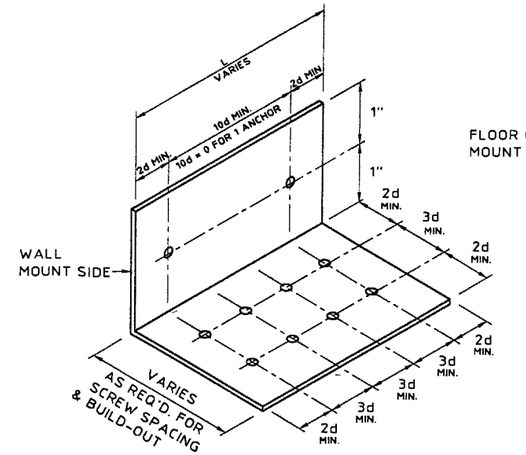

(A) TENSION CONNECTION TO WALL FOR STORM BAR, HEADER, OR MULLION

N.T.S.

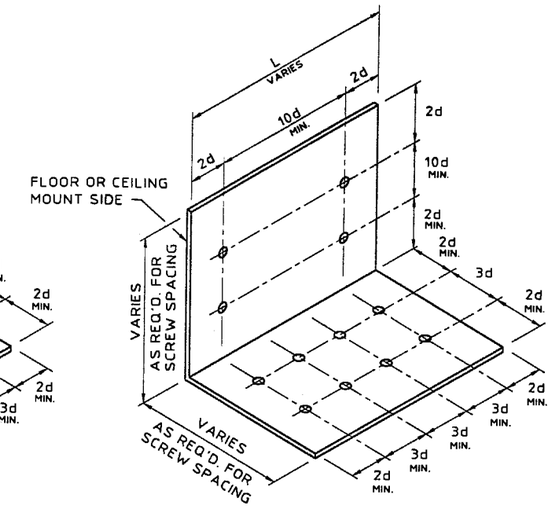

(B) SHEAR CONNECTION TO FLOOR OR CEILING FOR STORM BAR, HEADER, OR MULLION

N.T.S.

NOTE:
ANGLE ISOMETRIC DEPICTS MAXIMUM NUMBER OF ANCHOR BOLTS & TEK SCREWS, AND THEIR ARRANGEMENT. FOR LESS ANCHORS OR TEK SCREWS, ANY 3d OR 10d DIMENSIONS MAY BE = 0.

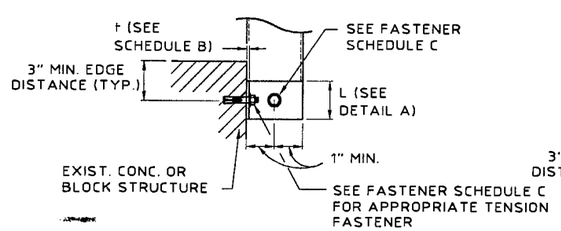

(C) STORM BAR/MULLION TO WALL SECTION

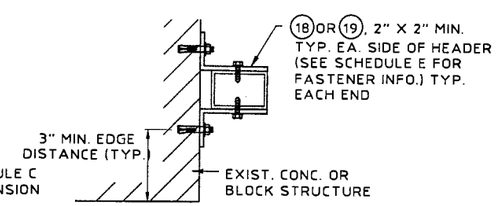

(D) HEADER TO WALL SECTION

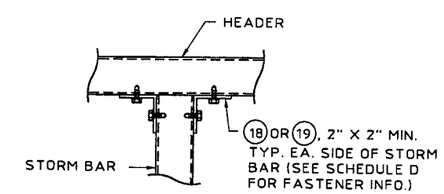

(E) HEADER TO STORM BAR DETAIL

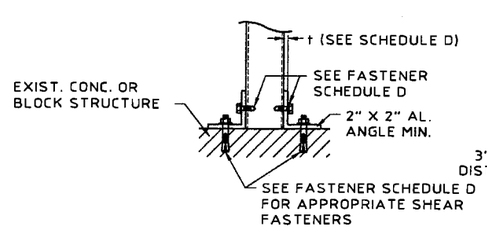

(F) STORM BAR/MULLION TO FLOOR/CEILING DETAIL

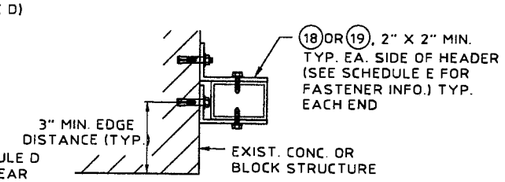

(G) HEADER TO WALL SECTION

APPROVED AS COMPLYING WITH THE SOUTH FLORIDA BUILDING CODE
DATE December 28, 2000
BY Manuel Perez
PRODUCT CONTROL DIVISION
BUILDING CODE COMPLIANCE OFFICE
ACCEPTANCE NO. 00-0424.04

STORM BAR/HEADER CONNECTION DETAILS

SCALE : 1-1/2" = 1'-0"

KNEZEVICH & ASSOCIATES, INC.
CONSULTING ENGINEERS • PRODUCT TESTING
1260 N. UNIVERSITY DRIVE, SUITE 180 • FORT LAUDERDALE, FL 33322
TEL: (954) 382-2800 • FAX: (954) 382-2989 • FLORIDA COA #3205
WEBSITE: WWW.KNEZEVICH.COM • E-MAIL: KA@KNEZEVICH.COM

COPYRIGHT © 2000 KNEZEVICH & ASSOCIATES, INC.

ROLL-UP SHUTTER

HURST
"QUALITY SERVICE SINCE 1957"
MANUFACTURERS OF HURRICANE & SECURITY PRODUCTS
AWNING COMPANY, INC.
6865 NW 36th AVENUE
MIAMI, FLORIDA 33147
PH: (305) 633-0900 / (800) 327-0905 FAX: (305) 634-9078

revisions

no	date	by	description
1	08/22/96		RENEWAL OF 96-51
2	08/01/97	GG	REV DETAIL A & B PG4
3	03/29/00	MD	GENERAL REVISIONS
4	10/27/00	ZS	BCCO COMMENTS

V.J. KNEZEVICH
PROFESSIONAL ENGINEER
FL License No: PE 0010983

NOV 1 0 2000

date 08/22/96	
scale AS NOTED	drawn by GG
design by VJK	checked by VJK

drawing no. 96-380

sheet 5 of 8

10/27/00 13:02

INTERIOR STORM BAR SPAN SCHEDULE (F) - MULTIPLE SPAN CONDITION (2 SPANS)

STORM BARS - MAX. LENGTH (INCHES) — SEPARATION FROM GLASS = 2"

STORM BAR TYPE — DEFLECTION LIMIT 1" & L/30

POSITIVE DESIGN LOAD (P.S.F.)	SLAT SPAN OR STORM BAR SPACING (IN)	(4) 2" x 2"	(4) END REACTION (POUNDS)	(5) 2" x 3"	(5) END REACTION (POUNDS)	(7) 2" x 4"	(7) END REACTION (POUNDS)	(10) 2" x 5"	(10) END REACTION (POUNDS)	(12) 2" x 6"	(12) END REACTION (POUNDS)
40	40	74	516	95	659	113	787	130	905	146	1016
	46	72	573	92	732	109	874	126	1005	141	1128
	52	70	629	89	803	106	958	122	1102	137	1237
	56	66	667	86	871	103	1040	119	1196	133	1343
50	32	74	516	95	659	113	787	130	904	146	1016
	38	71	587	91	750	109	895	125	1029	140	1155
	44	68	649	88	837	105	999	120	1148	135	1290
	50	64	692	85	921	101	1099	116	1264	131	1419
	56	60	732	80	975	98	1197	113	1376	127	1545
60	26	75	507	95	648	114	773	131	889	147	999
	32	71	593	91	757	108	903	124	1039	140	1167
	38	67	662	87	861	104	1027	119	1181	134	1327
	44	62	712	83	948	100	1147	115	1318	129	1481
	50	58	759	77	1010	96	1246	111	1451	125	1629
	56	55	803	73	1069	90	1319	106	1549	121	1768
70	21	75	492	96	629	115	750	132	863	149	969
	27	71	592	91	756	108	903	124	1038	140	1166
	33	66	670	86	877	103	1047	118	1204	133	1352
	39	61	728	81	969	99	1185	114	1362	128	1530
	45	57	781	75	1040	93	1282	109	1505	123	1701
	51	53	831	71	1106	87	1364	103	1604	117	1832
	56	50	878	67	1169	83	1442	97	1698	111	1939
100	12	80	418	102	534	122	637	140	733	157	823
	18	72	566	92	722	110	862	126	991	142	1113
	24	65	679	86	896	102	1069	118	1229	132	1380
	30	58	759	77	1011	95	1247	111	1452	125	1631
	36	53	831	71	1107	87	1365	103	1606	117	1833
	42	49	898	65	1195	81	1475	95	1738	109	1985
	48	46	960	61	1278	76	1576	89	1861	102	2126
110	22	65	679	86	894	102	1067	118	1227	132	1378
	26	60	738	80	983	98	1211	113	1392	127	1563
	30	56	793	74	1056	91	1302	107	1529	122	1741
	34	52	845	70	1124	86	1387	101	1632	115	1863
	38	49	893	66	1189	81	1467	96	1728	109	1974
	42	47	939	63	1250	77	1542	91	1820	104	2079
	46	45	983	60	1309	74	1614	87	1908	100	2179

INTERIOR STORM BAR SPAN SCHEDULE (G) - MULTIPLE SPAN CONDITION (2 SPANS)

STORM BARS - MAX. LENGTH (INCHES) — SEPARATION FROM GLASS = 1-1/2"

STORM BAR TYPE — DEFLECTION LIMIT 1/2" & L/30

POSITIVE DESIGN LOAD (P.S.F.)	SLAT SPAN OR STORM BAR SPACING (IN)	(4) 2" x 2"	(4) END REACTION (POUNDS)	(5) 2" x 3"	(5) END REACTION (POUNDS)	(7) 2" x 4"	(7) END REACTION (POUNDS)	(10) 2" x 5"	(10) END REACTION (POUNDS)	(12) 2" x 6"	(12) END REACTION (POUNDS)
40	40	62	434	80	554	95	662	110	761	123	855
	46	60	482	77	616	92	735	106	845	119	949
	52	59	529	75	675	89	806	103	926	115	1040
	56	57	574	73	733	87	874	100	1005	112	1129
50	32	62	434	80	554	95	661	110	761	123	854
	38	60	494	76	630	91	752	105	865	118	972
	44	58	551	74	704	88	840	101	966	114	1084
	50	56	607	71	775	85	924	98	1063	110	1194
	56	54	660	69	843	83	1006	95	1157	107	1300
60	26	63	427	80	545	96	650	110	748	124	840
	32	60	498	76	637	91	760	105	874	117	981
	38	57	567	73	724	87	864	100	993	113	1116
	44	55	633	70	808	84	964	97	1109	108	1245
	50	53	696	68	889	81	1061	94	1220	105	1370
	56	52	758	66	968	79	1155	91	1328	102	1491
70	21	63	414	81	529	97	631	111	726	125	815
	27	60	498	76	636	91	759	105	873	117	980
	33	57	578	73	738	87	880	100	1012	112	1137
	39	55	654	70	835	83	996	96	1146	107	1287
	45	53	727	67	928	80	1108	92	1274	104	1431
	51	51	798	65	1019	78	1216	89	1398	100	1570
	56	50	867	63	1107	76	1321	87	1519	98	1705

EXTERIOR STORM BAR SPAN SCHEDULE (H) - MULTIPLE SPAN CONDITION (2 SPANS)

STORM BARS - MAX. LENGTH (INCHES)

STORM BAR TYPE — DEFLECTION LIMIT 99" & L/30

NEGATIVE DESIGN LOAD (P.S.F.)	SLAT SPAN OR STORM BAR SPACING (IN)	(6) 2" x 3"	(6) END REACTION (POUNDS)	(8) 2" x 4"	(8) END REACTION (POUNDS)	(11) 2" x 5"	(11) END REACTION (POUNDS)	(13) 2" x 6"	(13) END REACTION (POUNDS)	(15) 2" x 8"	(15) END REACTION (POUNDS)
40	40	113	786	124	859	160	1114	182	1265	223	1550
	46	106	843	116	923	150	1198	170	1361	209	1668
	52	99	897	109	983	141	1277	161	1451	197	1780
	58	94	947	103	1040	134	1351	152	1536	187	1885
50	32	113	786	124	859	160	1114	182	1265	223	1549
	38	104	857	114	938	148	1218	168	1384	206	1696
	44	97	922	106	1012	138	1314	156	1494	192	1833
	50	91	983	100	1081	129	1404	147	1597	181	1960
	56	86	1040	94	1146	123	1489	139	1694	171	2081
60	26	114	777	125	849	162	1101	184	1250	225	1531
	32	103	862	113	945	147	1226	167	1393	204	1708
	38	95	940	104	1032	135	1340	154	1523	189	1869
	44	88	1011	97	1113	126	1446	143	1644	176	2019
	50	83	1078	91	1188	118	1545	135	1757	166	2159
	56	78	1140	86	1257	112	1638	128	1863	157	2291
70	21	117	761	127	831	165	1078	188	1224	230	1499
	27	103	862	113	944	147	1226	167	1393	205	1707
	33	94	952	103	1045	134	1358	152	1544	186	1895
	39	86	1033	95	1138	123	1479	140	1682	172	2066
	45	80	1109	88	1222	115	1591	131	1810	161	2225
	51	75	1180	83	1301	108	1697	123	1931	152	2375
	56	71	1247	79	1374	103	1796	117	2044	144	2515
100	12	130	680	142	743	184	962	208	1092	255	1335
	18	107	836	117	915	151	1187	172	1349	211	1653
	24	92	965	101	1060	132	1378	150	1566	184	1922
	30	83	1078	91	1188	118	1546	135	1758	165	2160
	36	75	1181	83	1301	108	1698	123	1932	152	2376
	42	70	1275	77	1406	101	1838	115	2092	141	2575
	48	65	1363	72	1502	94	1969	107	2242	132	2761
110	22	92	964	102	1059	132	1376	150	1564	184	1920
	26	85	1048	94	1155	122	1501	138	1707	170	2097
	30	79	1126	87	1241	113	1617	129	1840	159	2262
	34	74	1199	82	1322	107	1726	122	1964	149	2416
	38	70	1268	77	1398	101	1828	115	2081	142	2561
	42	67	1334	74	1470	96	1925	110	2192	135	2699
	46	64	1396	70	1539	92	2018	105	2298	129	2830
150	15	95	941	104	1033	135	1342	154	1525	188	1871
	19	84	1057	93	1164	121	1514	137	1721	169	2115
	23	77	1161	85	1280	110	1669	125	1899	154	2335
	27	71	1257	78	1385	102	1811	116	2061	143	2537
	31	66	1346	73	1484	95	1943	109	2213	134	2725
	35	62	1430	69	1576	90	2068	103	2355	126	2902
	39	59	1509	65	1663	85	2185	97	2489	120	3069
200	10	101	879	111	964	144	1251	164	1421	201	1743
	14	86	1040	94	1146	123	1489	139	1694	171	2081
	18	75	1180	83	1300	109	1696	124	1930	152	2373
	22	68	1304	75	1437	98	1881	112	2141	138	2636
	26	63	1418	69	1562	91	2050	103	2334	127	2876
	30	58	1523	64	1678	85	2206	97	2514	119	3098
	34	55	1621	61	1787	80	2353	91	2681	112	3307
230	14	81	1104	89	1216	116	1583	132	1801	162	2214
	17	73	1219	81	1343	105	1754	120	1996	147	2456
	20	67	1323	74	1459	97	1910	111	2174	136	2677
	23	63	1421	69	1566	91	2054	103	2340	127	2882
	26	59	1512	65	1666	85	2190	97	2494	120	3075
	29	56	1597	61	1760	81	2318	92	2641	114	3257
	32	53	1679	58	1850	77	2436	88	2780	108	3429

NOTES:

1. INTERPOLATE FOR STORM BAR SPANS AND REACTIONS BETWEEN THOSE SHOWN ON THIS SHEET.
2. TO USE DOUBLE STORM BAR, ENTER CHART AT REQUIRED DESIGN LOAD AND CHOOSE THE DESIRED SLAT SPAN OR STORM BAR SPACING BASED ON HALF OF THE ACTUAL SLAT SPAN OR STORM BAR SPACING.

APPROVED AS CONFORMING WITH THE SOUTH FLORIDA BUILDING CODE
DATE December 28, 2000
BY Manuel Perez
PRODUCT CONTROL DIVISION
BUILDING CODE COMPLIANCE OFFICE
ACCEPTANCE NO. 00-0924.04

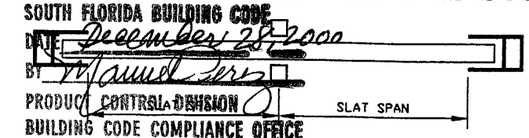

DOUBLE SPAN LAYOUT

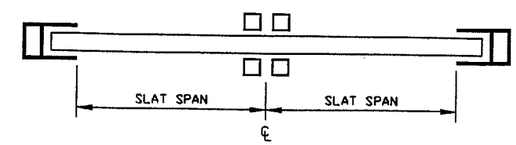

DOUBLE STORM BAR LAYOUT

KNEZEVICH & ASSOCIATES, INC.
CONSULTING ENGINEERS • PRODUCT TESTING
1260 N. UNIVERSITY DRIVE, SUITE 180 • FORT LAUDERDALE, FL 33322
TEL: (954) 382-2800 • FAX: (954) 382-2889 • FLORIDA COA #3205
WEBSITE: WWW.KNEZEVICH.COM • E-MAIL: KA@KNEZEVICH.COM
COPYRIGHT © 2000 KNEZEVICH & ASSOCIATES, INC.

ROLL-UP SHUTTER

HURST AWNING COMPANY, INC.
MANUFACTURERS OF HURRICANE & SECURITY PRODUCTS
6865 NW 36th AVENUE
MIAMI, FLORIDA 33147
PH: (305) 635-0900 / (800) 327-0905 FAX: (305) 634-9978

"QUALITY SERVICE SINCE 1957"

revisions

no	date	by	description
1	08/22/96		RENEWAL OF 95-51
2	08/01/97	GG	REV. DETAIL A & PGL.
3	03/29/00	MD	GENERAL REVISIONS
4	10/27/00	ZS	BCCO COMMENTS

V.J. KNEZEVICH
PROFESSIONAL ENGINEER
FL License No: PE 0010983

NOV 10 2000

date 08/22/96	
scale AS NOTED	drawn by GG
design by VJK	checked by VJK
drawing no. 96-380	
sheet 6 of 8	

10/27/00 13:02

PERMANENT MULLION SPAN SCHEDULE (J)

NEGATIVE DESIGN LOAD (P.S.F.)	SLAT SPAN (IN)	MULLION - MAX. LENGTH (INCHES)									
		MULLION TYPE							DEFLECTION LIMIT 99* & L/180		
		(5) 2" x 3"	(5) END REACTION (POUNDS)	(7) 2" x 4"	(7) END REACTION (POUNDS)	(10) 2" x 5"	(10) END REACTION (POUNDS)	(12) 2" x 6"	(12) END REACTION (POUNDS)	(14) 2" x 8"	(14) END REACTION (POUNDS)
40	28	85	433	108	548	130	660	152	768	194	985
	34	81	479	102	606	123	730	144	850	185	1091
	40	77	523	98	661	118	797	138	929	177	1191
	46	74	565	94	715	114	861	133	1004	170	1287
	52	72	605	91	766	110	923	128	1076	164	1380
	56	70	645	88	816	106	983	125	1123	161	1440
50	25	82	470	103	594	125	716	145	842	186	1080
	31	77	525	98	664	118	800	137	940	176	1205
	37	74	577	93	730	112	880	131	1033	168	1324
	43	71	627	89	794	108	956	125	1122	161	1438
	49	68	675	86	855	104	1030	121	1207	155	1548
	55	66	722	83	914	100	1101	117	1290	150	1654
	56	64	767	81	971	97	1169	116	1303	149	1671
60	21	80	493	101	625	121	752	142	874	182	1120
	27	75	558	95	706	114	851	134	988	171	1267
	33	71	618	90	783	108	943	127	1097	163	1407
	39	68	676	86	856	104	1032	121	1200	156	1539
	45	65	732	83	927	100	1116	117	1299	149	1666
	51	63	786	80	994	96	1198	113	1395	144	1788
	56	61	837	77	1060	93	1277	110	1472	140	1887
70	18	78	511	99	647	119	779	140	901	179	1156
	24	73	585	93	740	112	891	131	1033	168	1324
	30	69	654	88	827	106	997	124	1156	158	1483
	36	66	719	84	911	101	1097	118	1273	151	1633
	42	63	782	80	990	96	1193	113	1386	145	1777
	48	61	842	77	1066	93	1285	109	1493	139	1915
	54	59	901	75	1140	90	1374	105	1597	135	2048
80	16	77	525	98	665	118	801	137	935	176	1199
	22	72	608	91	770	109	927	128	1082	164	1388
	28	68	685	86	867	103	1045	120	1220	154	1564
	34	64	758	81	960	98	1157	114	1350	147	1731
	40	61	828	78	1048	94	1263	109	1474	140	1891
	46	59	895	75	1133	90	1365	105	1593	135	2043
	52	57	960	72	1215	87	1464	102	1708	130	2191
90	14	76	537	97	680	116	819	136	956	174	1225
	20	71	628	89	796	108	958	126	1119	161	1435
	26	66	714	84	904	101	1089	118	1271	151	1630
	32	63	794	79	1006	96	1212	112	1414	143	1813
	38	60	871	76	1103	91	1328	107	1551	137	1988
	44	58	944	73	1196	88	1440	102	1681	131	2156
	50	56	1015	70	1285	85	1548	99	1807	127	2317
100	12	76	543	96	687	116	828	135	966	173	1239
	18	70	644	88	815	106	982	124	1146	159	1469
	24	65	737	82	933	99	1124	116	1312	149	1683
	30	62	825	78	1045	94	1258	110	1469	141	1883
	36	59	909	74	1150	90	1386	104	1617	134	2074
	42	56	988	71	1251	86	1507	100	1759	128	2256
	48	54	1065	69	1348	83	1624	96	1896	124	2431
130	18	64	768	81	973	97	1172	114	1368	146	1754
	22	61	843	77	1068	93	1286	108	1501	139	1925
	26	58	915	74	1159	89	1396	104	1629	133	2089
	30	56	984	71	1246	86	1501	100	1752	129	2247
	34	55	1051	69	1331	83	1603	97	1871	125	2399
	38	53	1116	67	1412	81	1702	94	1986	121	2547
	42	52	1179	65	1492	79	1798	92	2098	118	2690
150	15	63	783	80	991	96	1194	113	1393	144	1786
	19	60	868	76	1099	92	1324	107	1545	137	1982
	23	57	950	73	1202	88	1448	102	1690	131	2168
	27	55	1028	70	1301	84	1567	98	1830	126	2346
	31	53	1103	67	1396	81	1682	95	1964	122	2518
	35	52	1176	65	1489	79	1793	92	2093	118	2684
	39	50	1246	63	1578	76	1901	89	2279	114	2845
170	13	63	793	80	1004	96	1209	112	1411	143	1810
	17	59	889	75	1125	90	1356	106	1582	135	2029
	21	57	980	72	1241	86	1495	101	1745	129	2237
	25	54	1067	69	1351	83	1627	96	1899	124	2436
	29	52	1151	66	1457	80	1755	93	2048	119	2627
	33	50	1231	64	1559	77	1878	90	2192	115	2811
	37	49	1310	62	1658	75	1997	87	2331	112	2989
230	14	56	995	71	1259	86	1517	100	1771	128	2271
	17	54	1082	68	1370	82	1651	96	1927	123	2471
	20	52	1167	66	1477	79	1779	92	2077	118	2663
	23	50	1248	63	1580	76	1903	89	2222	114	2849
	26	49	1327	61	1680	74	2023	86	2362	111	3029
	29	47	1403	60	1776	72	2140	84	2498	106	3164
	32	46	1478	58	1871	70	2254	82	2630	103	3294

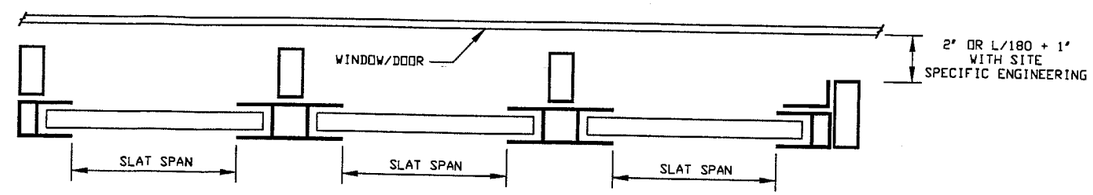

MULLION LAYOUT

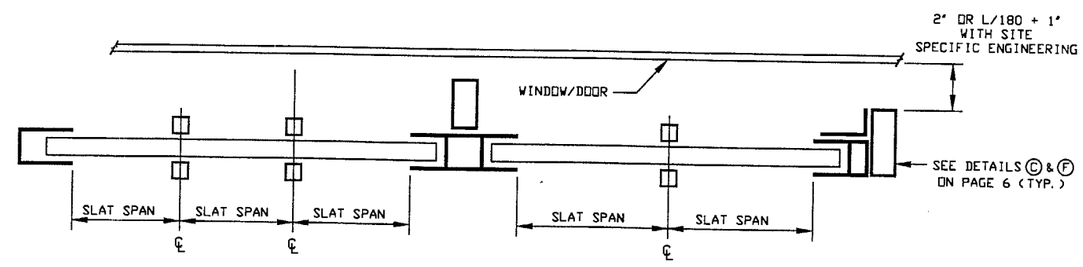

MULLION & STORM BAR LAYOUT

APPROVED AS COMPLYING WITH THE SOUTH FLORIDA BUILDING CODE
DATE December 28, 2000
BY Manuel Perez
PRODUCT CONTROL DIVISION
BUILDING CODE COMPLIANCE OFFICE
ACCEPTANCE NO. 00-0424.04

NOTES:

1. INTERPOLATE FOR MULLION SPANS AND REACTIONS BETWEEN THOSE SHOWN ON THIS SHEET.
2. TO USE DOUBLE MULLION, ENTER CHART AT REQUIRED DESIGN LOAD AND CHOOSE THE DESIRED MULLION BASED ON HALF OF THE ACTUAL SLAT SPAN.

KNEZEVICH & ASSOCIATES, INC.
CONSULTING ENGINEERS • PRODUCT TESTING
1280 N. UNIVERSITY DRIVE, SUITE 180 • FORT LAUDERDALE, FL 33322
TEL: (954) 382-2600 • FAX: (954) 382-2989 • FLORIDA COA #3205
WEBSITE: WWW.KNEZEVICH.COM • E-MAIL: KA@KNEZEVICH.COM

COPYRIGHT © 2000 KNEZEVICH & ASSOCIATES, INC.

ROLL-UP SHUTTER

HURRICANE SHUTTERS AWNING COMPANY, INC.
"QUALITY SERVICE SINCE 1957"
MANUFACTURERS OF HURRICANE & SECURITY PROTECTION PRODUCTS
6865 NW 36th AVENUE
MIAMI, FLORIDA 33147
PH: (305) 635-6900 / (800) 327-6965 FAX: (305) 634-9078

revisions

no	date	by	description
1	08/22/96		RENEWAL OF 95-51
2	08/01/97	GG	REV. DETAIL A & B PG4
3	03/29/00	MD	GENERAL REVISIONS
4	10/27/00	ZS	BCCO COMMENTS

V.J. KNEZEVICH
PROFESSIONAL ENGINEER
FL License No: PE 0010983
NOV 10 2000

date 08/22/96	
scale AS NOTED	drawn by GG
design by VJK	checked by VJK

drawing no. 96-380

sheet 7 of 8

HEADER LENGTH OR SHUTTER WIDTH SCHEDULE (K)

HEADER - MAX. LENGTH (INCHES)

HEADER TYPE — DEFLECTION LIMIT 99° & L/30

NEGATIVE DESIGN LOAD (P.S.F.)	MAXIMUM SLAT SPAN USED (IN)	(5) 2" x 3" STORM BAR HEIGHT						(7) 2" x 4" STORM BAR HEIGHT						(10) 2" x 5" STORM BAR HEIGHT						(12) 2" x 6" STORM BAR HEIGHT						(14) 2" x 8" STORM BAR HEIGHT					
		48	60	72	84	96	120	48	60	72	84	96	120	48	60	72	84	96	120	48	60	72	84	96	120	48	60	72	84	96	120
40	38	152	136	125	116	110	98	185	166	152	141	132	119	216	194	178	165	155	139	245	221	202	188	176	159	301	271	249	231	217	196
	44	152	136	126	117	110	98	185	166	152	141	132	120	216	194	178	165	155	139	245	221	202	188	176	159	301	271	249	231	217	196
	50	152	138	126	117	110	87	185	166	152	143	134	120	216	194	178	165	155	141	245	221	202	188	176	159	301	271	249	231	217	196
	56	154	138	126	117	97	87	185	168	154	143	134	120	216	194	178	167	157	141	245	221	202	188	176	160	301	271	249	231	217	196
50	40	136	122	113	105	98	88	166	149	137	127	120	108	194	174	160	148	139	125	221	198	182	169	159	142	271	244	224	208	196	176
	46	138	124	113	105	98	78	166	149	136	128	120	108	194	174	160	148	139	126	221	198	182	169	159	142	271	244	224	208	196	176
	52	138	124	113	93	87	78	166	151	138	128	120	108	194	174	160	150	141	126	221	198	182	169	159	144	271	244	224	208	196	176
	56	138	124	100	93	87	78	168	151	138	128	120	96	194	174	161	150	141	126	221	198	182	169	160	144	271	244	224	208	196	176
60	33	125	112	102	96	89	80	152	137	125	116	109	99	178	160	146	136	127	114	202	182	167	155	145	130	249	224	206	191	179	161
	39	125	113	103	96	89	80	152	137	125	117	110	99	178	160	146	136	127	116	202	182	167	155	145	130	249	224	206	191	179	161
	45	126	113	103	96	79	71	152	137	126	117	110	99	178	160	146	136	129	116	202	182	167	155	145	132	249	224	206	191	179	161
	51	126	113	103	85	79	71	154	138	126	117	110	87	178	160	148	137	129	116	202	182	167	155	147	132	249	224	206	191	179	161
	56	126	100	91	85	79	71	154	138	112	117	98	87	178	161	148	137	129	116	202	182	169	157	147	132	249	224	206	191	179	163
70	28	116	104	95	88	83	74	141	127	116	108	101	90	165	148	136	126	118	106	188	169	155	144	135	121	231	208	191	178	167	150
	34	116	104	96	89	83	74	141	127	116	108	102	91	165	148	136	126	118	106	188	169	155	144	135	121	231	208	191	178	167	150
	40	117	105	96	89	83	66	141	127	117	109	102	91	165	148	136	126	120	107	188	169	155	144	135	121	231	208	191	178	167	150
	46	117	105	96	78	73	66	141	128	117	109	102	81	165	148	137	127	120	107	188	169	155	144	136	122	231	208	191	178	167	151
	52	117	105	85	78	73	66	143	128	117	109	90	81	165	150	137	127	120	107	188	169	157	145	136	122	231	208	191	178	169	151
	56	117	93	85	78	73	66	143	128	117	97	90	81	167	150	137	127	120	95	188	169	157	145	136	109						
80	24	108	97	88	82	77	69	132	119	109	101	94	85	155	139	127	118	111	99	176	159	145	135	126	114	217	196	179	167	156	141
	30	108	97	89	83	77	69	132	119	109	101	94	85	155	139	127	118	111	99	176	159	145	135	126	114	217	196	179	167	156	141
	36	108	98	89	83	77	61	132	119	109	102	96	85	155	139	127	118	111	101	176	159	145	135	126	114	217	196	179	167	156	141
	42	110	98	89	73	69	61	132	120	110	102	96	85	155	139	127	120	112	101	176	159	145	135	126	115	217	196	179	167	156	141
	48	110	98	79	73	69	61	134	120	110	102	85	76	155	141	129	120	112	101	176	159	145	136	128	115	217	196	179	167	156	142
	54	110	87	79	73	69	61	134	120	110	90	85	76	157	141	129	120	112	89	176	160	147	136	128	102	217	196	179	167	158	142
	56	97	87	79	73	69	61	134	120	98	90	85	76	157	141	129	120	99	89	176	160	147	136	128	102	217	196	181	169	158	142
90	21	102	91	83	77	72	65	125	112	103	95	89	80	146	131	120	112	105	94	167	150	137	127	120	107	206	185	170	158	148	133
	27	102	91	83	78	73	65	125	112	103	95	89	81	146	131	120	112	105	94	167	150	137	127	120	107	206	185	170	158	148	133
	33	102	92	84	78	73	58	125	112	103	96	90	81	146	131	120	112	105	95	167	150	137	127	120	107	206	185	170	158	148	133
	39	103	92	84	78	65	58	125	113	104	96	90	71	146	131	120	113	106	95	167	150	137	127	120	108	206	185	170	158	148	133
	45	103	92	75	69	65	58	126	113	104	96	80	71	146	133	122	113	106	95	167	150	137	129	121	108	206	185	170	158	148	134
	51	103	82	75	69	65	58	126	113	104	85	80	71	148	133	122	113	106	84	167	151	139	129	121	96	206	185	170	158	149	134
	54	91	82	75	69	65	58	126	113	92	85	80	71	148	133	122	113	94	84	167	151	139	129	107	96	206	185	170	159	149	134
100	18	97	87	79	73	69	61	119	107	98	90	85	76	139	125	114	106	99	89	159	142	130	121	114	102	196	176	161	150	141	126
	24	97	87	79	73	69	62	119	107	98	90	85	76	139	125	114	106	99	89	159	142	130	121	114	102	196	176	161	150	141	126
	30	97	88	80	74	69	62	119	107	98	90	85	76	139	125	114	106	99	89	159	142	130	121	114	102	196	176	161	150	141	126
	36	98	88	80	74	61	55	119	107	99	91	85	76	139	125	114	106	99	90	159	142	130	121	114	103	196	176	161	150	141	126
	42	98	88	71	66	61	55	119	108	99	91	85	68	139	125	116	107	101	90	159	142	130	121	115	103	196	176	161	150	141	126
	48	98	78	71	66	61	55	120	108	99	91	76	68	139	126	116	107	101	80	159	142	132	122	115	103	196	176	161	150	141	128
	51	87	78	71	66	61	55	120	108	87	81	76	68	141	126	116	107	89	80	159	144	132	122	102	92	196	176	163	151	142	128
110	27	92	83	76	71	66	59	113	102	93	86	81	73	133	119	109	101	95	85	151	136	125	116	108	97	187	168	154	143	134	121
	31	93	84	76	71	66	52	113	102	93	87	81	73	133	119	109	101	95	86	151	136	125	116	108	97	187	168	154	143	134	121
	35	93	84	76	71	58	52	113	103	94	87	81	73	133	119	109	102	96	86	151	136	125	116	108	98	187	168	154	143	134	121
	39	93	84	67	62	58	52	115	103	94	87	81	64	133	119	110	102	96	86	151	136	125	117	110	98	187	168	154	143	134	121
	43	93	74	67	62	58	52	115	103	94	87	72	64	133	121	110	102	96	76	151	136	126	117	110	98	187	168	154	143	134	122
	47	83	74	67	62	58	52	115	103	83	77	72	64	134	121	110	102	96	76	151	138	126	117	110	87	187	168	154	143	136	122
	49	83	74	67	62	58	52	115	103	83	77	72	64	134	121	110	102	85	76	151	138	126	117	97	87	187	168	154	145	136	122
120	25	88	79	73	68	63	57	109	98	89	82	77	70	127	114	105	97	91	82	145	130	120	111	104	93	179	161	148	137	129	116
	29	88	80	73	68	63	50	109	98	89	83	78	70	127	114	105	97	91	83	145	130	120	111	104	93	179	161	148	137	129	116
	33	89	80	73	68	56	50	109	99	90	83	78	70	127	114	105	98	92	83	145	130	120	111	104	94	179	161	148	137	129	116
	37	89	80	65	60	56	50	110	99	90	83	78	62	127	114	106	98	92	83	145	130	120	111	105	94	179	161	148	137	129	116
	41	89	71	65	60	56	50	110	99	90	83	69	62	127	116	106	98	92	73	145	130	121	112	105	94	179	161	148	137	129	117
	45	79	71	65	60	56	50	110	99	80	74	69	62	129	116	106	98	92	73	145	132	121	112	105	84	179	161	148	137	130	117
	47	79	71	65	60	56	50	110	99	80	74	69	62	129	116	106	98	82	73	145	132	121	112	93	84	179	161	148	139	130	117
130	23	85	76	69	65	61	54	105	94	86	79	74	67	123	110	101	93	88	78	140	126	115	107	100	90	173	155	142	132	124	111
	27	85	77	70	65	61	54	105	94	86	80	75	67	123	110	101	93	88	79	140	126	115	107	100	90	173	155	142	132	124	111
	31	86	77	70	65	54	48	105	94	87	80	75	67	123	110	101	93	89	79	140	126	115	107	100	91	173	155	142	132	124	111
	35	86	77	62	57	54	48	105	95	87	80	75	59	123	110	102	94	89	79	140	126	115	107	101	91	173	155	142	132	124	111
	39	86	68	62	57	54	48	106	95	87	80	66	59	123	111	102	94	89	79	140	126	116	108	101	91	173	155	142	132	124	113
	43	76	68	62	57	54	48	106	95	87	71	66	59	124	111	102	94	89	70	140	127	116	108	101	81	173	155	142	132	125	113
	45	76	68	62	57	54	48	106	95	77	71	66	59	124	111	102	94	78	70	140	127	116	108	90	81	173	155	142	134	125	113
230	24	65	58	53	49	40	36	79	71	65	60	56	50	93	83	76	71	67	60	106	95	87	81	76	69	131	118	108	100	94	85
	30	82	74	68	63	59	52	101	90	82	76	72	65	118	106	97	90	84	76	106	95	88	82	77	69	131	118	108	100	94	85
	35	83	74	68	63	52	46	101	90	83	77	72	57	118	106	97	90	85	76	106	96	88	82	68	61	131	118	108	102	95	85

NOTE: INTERPOLATE FOR HEADER SPANS AND REACTIONS BETWEEN THOSE SHOWN ON THIS SHEET. FOR HEADER REACTION DETERMINATION AND END CONNECTION DETAILS/ANCHORS, SEE SCHEDULE E, SHEET 5 OF 8.

APPROVED AS COMPLYING WITH THE SOUTH FLORIDA BUILDING CODE
DATE December 28, 2000
BY Manuel Diaz
PRODUCT CONTROL DIVISION
BUILDING CODE COMPLIANCE OFFICE
ACCEPTANCE NO. 00-0424.04

10/27/00 13:04

KNEZEVICH & ASSOCIATES, INC.
CONSULTING ENGINEERS • PRODUCT TESTING
1260 N. UNIVERSITY DRIVE, SUITE 180 • FORT LAUDERDALE, FL 33322
TEL: (954) 382-2800 • FAX: (954) 382-2989 • FLORIDA COA #3205
WEBSITE: WWW.KNEZEVICH.COM • E-MAIL: KA@KNEZEVICH.COM

COPYRIGHT © 2000 KNEZEVICH & ASSOCIATES, INC.

ROLL-UP SHUTTER

THURSTON AWNING COMPANY, INC.
"QUALITY SERVICE SINCE 1957"
MANUFACTURERS OF HURRICANE & SECURITY PROTECTION PRODUCTS
6565 NW 36th AVENUE
MIAMI, FLORIDA 33147
PH: (305) 635-0990 / (800) 327-0005 FAX: (305) 634-9078

revisions

no	date	by	description
1	08/22/96		RENEWAL OF 95-51
2	08/01/97	GG	REV. DETAIL A & B PG4
3	03/29/00	MD	GENERAL REVISIONS
4	10/27/00	ZS	BCCO COMMENTS

V.J. KNEZEVICH
PROFESSIONAL ENGINEER
FL License No: PE 0010983

NOV 1 0 2000

date 08/22/96	
scale AS NOTED	drawn by GG
design by VJK	checked by VJK

drawing no. 96-380

sheet 8 of 8