MIAMI-DADE

**MIAMI-DADE** COUNTY, FLORIDA
METRO-DADE FLAGLER BUILDING

**BUILDING CODE COMPLIANCE OFFICE**
METRO-DADE FLAGLER BUILDING
140 WEST FLAGLER STREET, SUITE 1603
MIAMI, FLORIDA 33130-1563
(305) 375-2901 FAX (305) 375-2908

**CONTRACTOR LICENSING SECTION**
(305) 375-2527 FAX (305) 375-2558

**CONTRACTOR ENFORCEMENT SECTION**
(305) 375-2966 FAX (305) 375-2908

**PRODUCT CONTROL DIVISION**
(305) 375-2902 FAX (305) 372-6339

# PRODUCT CONTROL NOTICE OF ACCEPTANCE

**Ludowici-Celadon, Inc.**
**4757 Tile Plant Road**
**New Lexington OH 43764**

Your application for Product Approval of:
***Medium Profile (French)***
under Chapter 8 of the Code of Miami-Dade County governing the use of Alternate Materials and Types of Construction, and completely described herein, has been recommended for acceptance by the Miami-Dade County Building Code Compliance Office (BCCO) under the conditions specified herein.

This approval shall not be valid after the expiration date stated below. BCCO reserves the right to secure this product or material at anytime from a jobsite or manufacturer's plant for quality control testing.
If this product or material fails to perform in the approved manner, BCCO may revoke, modify, or suspend the use of such product or material immediately. BCCO reserves the right to revoke this approval, if it is determined BCCO that this product or material fails to meet the requirements of the South Florida Building Code.

The expense of such testing will be incurred by the manufacturer.

**Acceptance No.: 00-0426.03**

**Expires: 12/16/2002**

Raul Rodriguez
Chief Product Control Division

**THIS IS THE COVERSHEET, SEE ADDITIONAL PAGES FOR SPECIFIC AND GENERAL CONDITIONS**

**BUILDING CODE & PRODUCT REVIEW COMMITTEE**

This application for Product Approval has been reviewed by the BCCO and approved by the Building Code and Product Review Committee to be used in Dade County, Florida under the conditions set forth above.

Francisco J. Quintana, R.A.
Director
Miami-Dade County
Building Code Compliance Office

**Approved: 06/22/2000**



**Internet mail address: postmaster@buildingcodeonline.com** **Homepage: http://www.buildingcodeonline.com**

## NOTICE OF ACCEPTANCE: STANDARD CONDITIONS

### 1. SCOPE

This renews a roofing system using Ludowici **'French' Clay Roof Tile**, as manufactured Ludowici Roof Tile, Inc. described in Section 2 of this Notice of Acceptance, designed to comply with the South Florida Building Code, 1994 Edition for Miami-Dade County. For the locations where the pressure requirements, as determined by SFBC Chapter 23, do not exceed the design pressure values obtain by calculations in compliance with RAS 127 using the values listed in section 4 herein. The attachment calculations shall be done as a moment based system.

**Category:** Roofing
**Sub Category:** Tile / Flat Profile

### 2. PRODUCT DESCRIPTION

| Manufactured by Applicant | Dimensions | Test Specifications | Product Description |
|---|---|---|---|
| Ludowici French Roof Tile | l = 16 ¼ "<br>w = 9"<br>1" thick | ASTM C 1167 | Flat, interlocking, vitrified clay roof tile equipped with one nail hole. For direct deck or battened, nail-on, mortar set or adhesive set applications. |
| Trim Pieces | l = varies<br>w = varies<br>varying thickness | ASTM C 1167 | Accessory trim, clay roof pieces for use at hips, rakes, ridges and valley terminations. Manufactured for each tile profile. |

#### 2.1 Components or products manufactured by others

| Product | Dimensions | Test Specifications | Product Description | Manufacturer |
|---|---|---|---|---|
| Rainproof II | 30" x 75' roll<br>36" x 75' roll<br>or<br>60" x 75' roll | PA 104 | Single ply, nail-on underlayment with 2" self-adhering top edge. | Protect-O-Wrap, Inc. (with current NOA) |
| Ice and Water Shield | 36" x 75' roll | PA 103 | Self-adhering underlayment | W.R. Grace Co. (with current NOA) |

Frank Zuloaga, RRC
Roofing Product Control Examiner

## NOTICE OF ACCEPTANCE: STANDARD CONDITIONS

| Product | Dimensions | Test Specifications | Product Description | Manufacturer |
|---|---|---|---|---|
| Wood Battens | Vertical<br>Min. 1"x 4"<br>Horizontal<br>Min. 1"x 4" for use with vertical battens<br>or<br>Min. 1"x 2" for use alone | Wood Preservers Institute LP – 2 | Salt pressure treated or decay resistant lumber battens | generic |
| Tile Nails | Min. 10dx 3" | PA 114 Appendix E | Corrosion resistant screw or smooth shank nails | generic |
| Tile Screws | #8x 2 ½" long<br>0.335" head dia.<br>0.131" shank dia.<br>0.175" screw thread dia. | PA 114 Appendix E | Corrosion resistant, coated, square drive, galvanized, coarse thread wood screws | generic |
| Roof Tile Mortar ("TileTite™") | N/A | PA 123 | Prepared mortar mix designed for mortar set roof tile applications. | Bermuda Roof Company, Inc. with current NOA |
| Roof Tile Mortar ("Quikrete® Roof Tile Mortar #1140") | N/A | PA 123 | Prepared mortar mix designed for mortar set roof tile applications. | Quikrete Construction Products with Current NOA |
| Roof Tile Mortar ("BONSAL® Roof Tile Mortar Mix") | N/A | PA 123 | Prepared mortar mix designed for mortar set roof tile applications. | W. R. Bonsal Co. with current NOA |
| Roof Tile Adhesive ("Polypro® AH160") | N/A | See NOA | Two component polyurethane adhesive designed for adhesive set roof tile applications. | Polyfoam Products, Inc. |

Frank Zuloaga, RRC
Roofing Product Control Examiner

## NOTICE OF ACCEPTANCE: STANDARD CONDITIONS

| Product | Dimensions | Test Specifications | Product Description | Manufacturer |
|---|---|---|---|---|
| Tile-Bond | Factory premixed canisters | See NOA | Single component polyurethane foam roof tile adhesive | Flexible Products (with current NOA) |
| Hurricane Clip & Fasteners | Clips Min. ½" width Min. 0.060" thick Clip Fasteners Min. 8d x 1 ¼" | PA 114 Appendix E | Corrosion resistant clips with corrosion resistant nails. | Generic |

## 3. LIMITATIONS

3.1 Fire classification is not part of this acceptance.

3.2 For mortar or adhesive set tile applications, a static field uplift test shall be performed in accordance with RAS 106.

3.3 Applicant shall retain the services of a Miami-Dade County Certified Laboratory to perform quarterly test in accordance with PA 112, appendix 'A'. Such testing shall be submitted to the Building Code Compliance Office for review.

3.4 Minimum underlayments shall be in compliance with the applicable Roofing Applications Standards listed section 4.1 herein.

3.5 30/90 hot mopped underlayment applications may be installed perpendicular to the roof slope unless stated otherwise by the underlayment material manufacturers published literature.

3.6 This acceptance is for wood deck applications. Minimum deck requirements shall be in compliance with chapter 29 of the SFBC.

## 4. INSTALLATION

4.1.1 Ludowici 'French' Clay Roof Tile and its components shall be installed in strict compliance with Miami Dade County Roofing Application Standard RAS 118, RAS 119, and RAS 120.

4.2 Data For Attachment Calculations

**Table 1: Aerodynamic Multipliers - $\lambda$ ($ft^3$)**

| Tile Profile | $\lambda$ ($ft^3$) Batten Application | $\lambda$ ($ft^3$) Direct Deck Application |
|---|---|---|
| Ludowici French Flat Tile | 0.179 | 0.194 |

Frank Zuloaga, RRC
Roofing Product Control Examiner

| Table 2: Restoring Moments due to Gravity - $M_g$ (ft-lbf) | | | | | | | | | | |
|---|---|---|---|---|---|---|---|---|---|---|
| Tile Profile | 3":12" | | 4":12" | | 5":12" | | 6":12" | | 7":12"or greater | |
| | Battens | Direct Deck | Battens | Direct Deck | Battens | Direct Deck | Battens | Direct Deck | Battens | Direct Deck |
| Ludowici French Tile | 4.70 | 5.01 | 4.63 | 4.93 | 4.53 | 4.82 | 4.42 | 4.71 | 4.29 | 4.57 |

| Table 3: Attachment Resistance Expressed as a Moment - $M_f$ (ft-lbf) for Nail-On Systems | | | | |
|---|---|---|---|---|
| Tile Profile | Fastener Type | Direct Deck (min 15/32" plywood) | Direct Deck (min. 19/32" plywood) | Battens |
| Ludowici French Tile | 2-10d Ring Shank Nails | 30.9 | 38.1 | 17.2 |
| | 1-10d Smooth or Screw Shank Nail | 7.3 | 9.8 | 4.9 |
| | 2-10d Smooth or Screw Shank Nails | 14.0 | 18.8 | 7.4 |
| | 1 #8 Screw | 30.8 | 30.8 | 18.2 |
| | 2 #8 Screw | 51.7 | 51.7 | 24.4 |
| | 1-10d Smooth or Screw Shank Nail (Field Clip) | 24.3 | 24.3 | 24.2 |
| | 1-10d Smooth or Screw Shank Nail (Eave Clip) | 19.0 | 19.0 | 22.1 |
| | 2-10d Smooth or Screw Shank Nails (Field Clip) | 35.5 | 35.5 | 34.8 |
| | 2-10d Smooth or Screw Shank Nails (Eave Clip) | 31.9 | 31.9 | 32.2 |
| | | | | |
| | 2-10d Ring Shank Nails[1] | 50.3 | 65.5 | 48.3 |

1 Installation with a 4" tile headlap and fasterners are located a min. of 2½" from head of tile.

| Table 4: Attachment Resistance Expressed as a Moment $M_f$ (ft-lbf) for Two Patty Adhesive Set Systems | | |
|---|---|---|
| Tile Profile | Tile Application | Minimum Attachment Resistance |
| Ludowici French Tile | Adhesive | 31.3[3] |

2 See manufactures component approval for installation requirements.

3 Flexible Products Company TileBond Average weight per patty 13.9 grams.
Polyfoam Product, Inc. Average weight per patty 8 grams.

Frank Zuloaga, RRC
Roofing Product Control Examiner

| Table 4A: Attachment Resistance Expressed as a Moment - $M_f$ (ft-lbf) for Single Patty Adhesive Set Systems | | |
|---|---|---|
| **Tile Profile** | **Tile Application** | **Minimum Attachment Resistance** |
| Ludowici French Tile | PolyPro™ | 118.9[4] |
| | PolyPro™ | 40.4[5] |
| 4 Large paddy placement of 45 grams of PolyPro™. | | |
| 5 Medium paddy placement of 24 grams of PolyPro™. | | |

| Table 4B: Attachment Resistance Expressed as a Moment - $M_f$ (ft-lbf) for Mortar Set Systems | | |
|---|---|---|
| **Tile Profile** | **Tile Application** | **Attachment Resistance** |
| Ludowici French Tile | Mortar Set | 20.60 |

## 5. LABELING

All tiles shall bear the imprint or identifiable marking of the manufacturer's name or logo, or following statement: "Miami-Dade County Product Control Approved".

## 6. BUILDING PERMIT REQUIREMENTS

**6.1** Application for building permit shall be accompanied by copies of the following:

**6.1.1** This Notice of Acceptance.

**6.1.2** Any other documents required by the Building Official or the South Florida Building Code (SFBC) in order to properly evaluate the installation of this system.

Frank Zuloaga, RRC
Roofing Product Control Examiner

APPROVED: June 22, 2000
EXPIRES :December 16, 2002

NOTICE OF ACCEPTANCE: STANDARD CONDITIONS

## PROFILE DRAWING

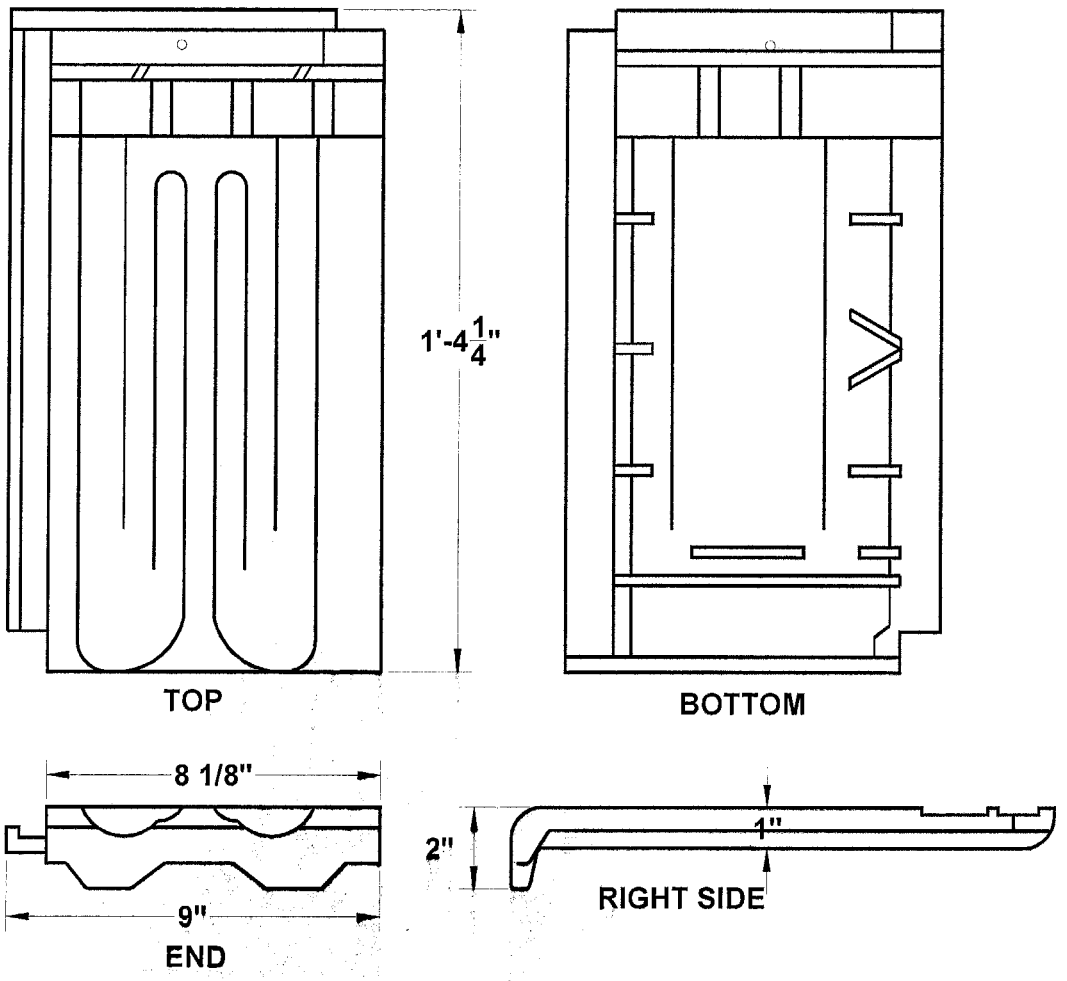


LUDOWICI "FRENCH" CLAY ROOF TILE

Frank Zuloaga, RRC
Roofing Product Control Examiner

**APPROVED: June 22, 2000**
**EXPIRES :December 16, 2002**

## NOTICE OF ACCEPTANCE: STANDARD CONDITIONS

1. Renewal of this Acceptance (approval) shall be considered after a renewal application has been filed and the original submitted documents, including test-supporting data, engineering documents, are no older than eight (8) years.

2. Any and all approved products shall be permanently labeled with the manufacturer's name, city, state, and the following statement: "Miami-Dade County Product Control Approval", or as specifically stated in the specific conditions of this Acceptance.

3. Renewals of Acceptance will not be considered if:
   a. There has been a change in the South Florida Building Code affecting the evaluation of this product and the product is not in compliance with the code changes.
   b. The product is no longer the same product (identical) as the one originally approved.
   c. If the Acceptance holder has not complied with all the requirements of this acceptance, including the correct installation of the product.
   d. The engineer who originally prepared, signed and sealed the required documentation initially submitted, is no longer practicing the engineering profession.

4. Any revision or change in the materials, use, and/or manufacture of the product or process shall automatically be cause for termination of this Acceptance, unless prior written approval has been requested (through the filing of a revision application with appropriate fee) and granted by this office.

5. Any of the following shall also be grounds for removal of this Acceptance:
   a. Unsatisfactory performance of this product or process.
   b. Misuse of this Acceptance as an endorsement of any product, for sales, advertising or any other purposes.

6. The Notice of Acceptance number preceded by the words Miami-Dade County, Florida, and followed by the expiration date may be displayed in advertising literature. If any portion of the Notice of Acceptance is displayed, then it shall be done in its entirety.

7. A copy of this Acceptance as well as approved drawings and other documents, where it applies, shall be provided to the user by the manufacturer or its distributors and shall be available for inspection at the job site at all time. The engineer need not reseal the copies.

8. Failure to comply with any section of this Acceptance shall be cause for termination and removal of Acceptance.

9. This Notice of Acceptance consists of pages 1 through 7 and this last page 8.

**END OF THIS ACCEPTANCE**

Frank Zuloaga, RRC
Roofing Product Control Examiner