MIAMI-DADE COUNTY, FLORIDA
METRO-DADE FLAGLER BUILDING

BUILDING CODE COMPLIANCE OFFICE
METRO-DADE FLAGLER BUILDING
140 WEST FLAGLER STREET, SUITE 1603
MIAMI, FLORIDA 33130-1563
(305) 375-2901 FAX (305) 375-2908

CONTRACTOR LICENSING SECTION
(305) 375-2527 FAX (305) 375-2558

CONTRACTOR ENFORCEMENT SECTION
(305) 375-2966 FAX (305) 375-2908

PRODUCT CONTROL DIVISION
(305) 375-2902 FAX (305) 372-6339

PRODUCT CONTROL NOTICE OF ACCEPTANCE

All Broward Hurricane Panel, Inc
450 West McNab Rd
Fort Lauderdale FL 33309

Your application for Product Approval of:
20 GA. Steel Storm Panel Shutter
under Chapter 8 of the Code of Miami-Dade County governing the use of Alternate Materials and Types of Construction, and completely described herein, has been recommended for acceptance by the Miami-Dade County Building Code Compliance Office (BCCO) under the conditions specified herein.

This approval shall not be valid after the expiration date stated below. BCCO reserves the right to secure this product or material at anytime from a jobsite or manufacturer's plant for quality control testing.
If this product or material fails to perform in the approved manner, BCCO may revoke, modify, or suspend the use of such product or material immediately. BCCO reserves the right to revoke this approval, if it is determined BCCO that this product or material fails to meet the requirements of the South Florida Building Code.

The expense of such testing will be incurred by the manufacturer.

Acceptance No.: 00-0426.06

Expires: 07/31/2003

Raul Rodriguez
Chief Product Control Division

THIS IS THE COVERSHEET, SEE ADDITIONAL PAGES FOR SPECIFIC AND GENERAL CONDITIONS

BUILDING CODE & PRODUCT REVIEW COMMITTEE

This application for Product Approval has been reviewed by the BCCO and approved by the Building Code and Product Review Committee to be used in Dade County, Florida under the conditions set forth above.

Francisco J. Quintana, R.A.
Director
Miami-Dade County
Building Code Compliance Office

Approved: 07/06/2000

Internet mail address: postmaster@buildingcodeonline.com **Homepage: http://www.buildingcodeonline.com**

All Broward Hurricane Panel, Inc.

ACCEPTANCE No. : 00-0426.06

APPROVED : JUL 0 6 2000

EXPIRES : July 31, 2003

NOTICE OF ACCEPTANCE: SPECIFIC CONDITIONS

1. SCOPE

This renews the Notice of Acceptance No. 98-0713.01, which was issued on November 26, 1998. It approves a 20 gauge galvanized steel storm panel shutter, as described in Section 2 of this Notice of Acceptance, designed to comply with the South Florida Building Code, 1994 Edition for Miami-Dade County, for the locations where the pressure requirements, as determined by SFBC Chapter 23, do not exceed the Design Pressure Rating values indicated in the approved drawings.

2. PRODUCT DESCRIPTION

This 20 gauge galvanized steel storm panel shutter and its components shall be constructed in strict compliance with the following documents: Drawing No. 98-128, titled "20 Ga. Steel Storm Panel", prepared by Knezevich & Associates, Inc., dated June 23, 1998, revision #2 dated October 20, 1998, sheets 1 through 7 of 7, signed and sealed by V. J. Knezevich, P.E., bearing the Miami-Dade County Product Control Approval and Renewal stamps with the Notice of Acceptance numbers and approval dates by the Miami-Dade County Product Control Division. These documents shall hereinafter be referred to as the approved drawings.

3. LIMITATIONS

All permanent set components, included but not limited to embedded anchor bolts, threaded cones, metal shields, headers and sills, must be protected against corrosion, contamination and damage at all times.

4. INSTALLATION

This 20 gauge galvanized steel storm panel shutter and its components shall be installed in strict compliance with the approved drawings.

5. LABELING

Each panel shall bear a permanent label with the manufacturer's name or logo, city, state and the following statement: "Miami-Dade County Product Control Approved".

6. BUILDING PERMIT REQUIREMENTS

6.1 Application for building permit shall be accompanied by copies of the following:

- **6.1.1** This Notice of Acceptance.
- **6.1.2** Duplicate copies of the approved drawings, as identified in Section 2 of this Notice of Acceptance, clearly marked to show the components selected for the proposed installation.
- **6.1.3** Any other documents required by the Building Official or the South Florida Building Code (SFBC) in order to properly evaluate the installation of this system.

Helmy A. Makar, P. E. - Product Control Examiner
Product Control Division

All Broward Hurricane Panel, Inc.

ACCEPTANCE No. : 00-0426.06

APPROVED : JUL 0 6 2000

EXPIRES : July 31, 2003

NOTICE OF ACCEPTANCE: STANDARD CONDITIONS

1 Renewal of this Acceptance (approval) shall be considered after a renewal application has been filed and the original submitted documents, including test-supporting data, engineering documents, are no older than eight (8) years.

2. Any and all approved products shall be permanently labeled with the manufacturer's name, city, state, and the following statement: "Miami-Dade County Product Control Approved", or as specifically stated in the specific conditions of this Acceptance.

3. Renewals of Acceptance will not be considered if:
   a. There has been a change in the South Florida Building Code affecting the evaluation of this product and the product is not in compliance with the code changes.
   b. The product is no longer the same product (identical) as the one originally approved.
   c. If the Acceptance holder has not complied with all the requirements of this acceptance, including the correct installation of the product.
   d. The engineer, who originally prepared, signed and sealed the required documentation initially submitted, is no longer practicing the engineering profession.

4. Any revision or change in the materials, use, and/or manufacture of the product or process shall automatically be cause for termination of this Acceptance, unless prior written approval has been requested (through the filing of a revision application with appropriate fee) and granted by this office.

5. Any of the following shall also be grounds for removal of this Acceptance:
   a. Unsatisfactory performance of this product or process.
   b. Misuse of this Acceptance as an endorsement of any product, for sales, advertising or any other purposes.

6. The Notice of Acceptance number preceded by the words Miami-Dade County, Florida, and followed by the expiration date may be displayed in advertising literature. If any portion of the Notice of Acceptance is displayed, then it shall be done in its entirety.

7. A copy of this Acceptance as well as approved drawings and other documents, where it applies, shall be provided to the user by the manufacturer or its distributors and shall be available for inspection at the job site at all time. The engineer need not reseal the copies.

8. Failure to comply with any section of this Acceptance shall be cause for termination and removal of Acceptance.

9. This Notice of Acceptance consists of pages 1, 2 and this last page 3.

END OF THIS ACCEPTANCE

Helmy A. Makar, P.E. -Product Control Examiner
Product Control Division

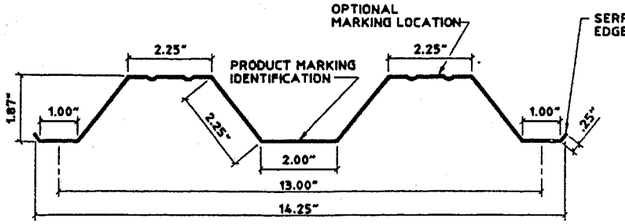

FULL PANEL

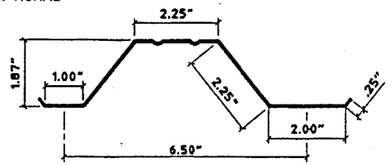

HALF PANEL

ONE HALF PANEL PER OPENING MAY BE USED AS REQUIRED TO COVER OPENING.

1 STORM PANEL

SCALE : 3" = 1'-0"

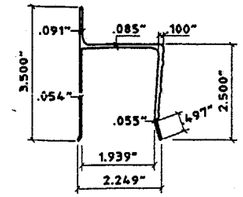

2 "h" HEADER

SCALE : 3" = 1'-0"

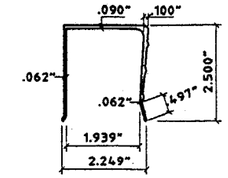

3 "U" HEADER

SCALE : 3" = 1'-0"

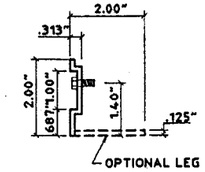

4 "SEA" ANGLE

SCALE : 3" = 1'-0"

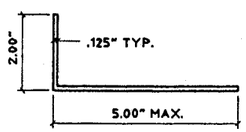

5 ANGLE

SCALE : 3" = 1'-0"

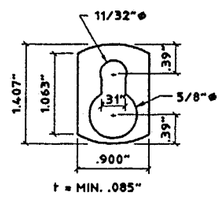

6 "KEYHOLE" WASHER

SCALE : 3" = 1'-0"
3003-H14 ALUMINUM ALLOY

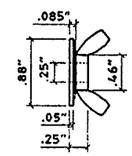

7 WINGNUT

SCALE : HALF SIZE

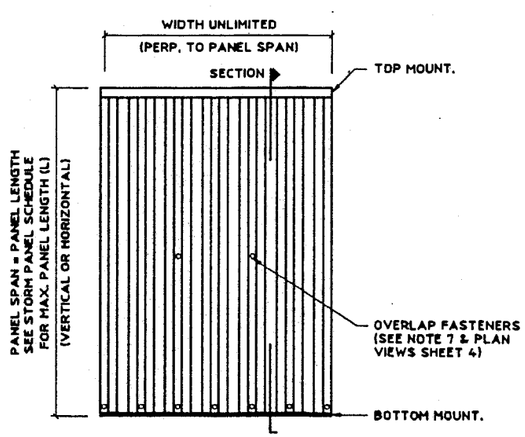

8 TYPICAL ELEVATION

FOR ALL INSTALLATIONS SEE TABLE 2, PAGE 4 OF 7 , FOR REQUIRED SEPARATION FROM GLASS.

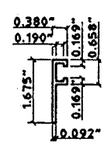

9 "F" - TRACK

SCALE : 3" = 1'-0"

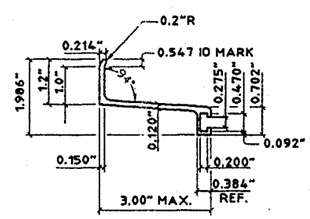

10 EXTENDED "F" - TRACK

SCALE : 3" = 1'-0"

GENERAL NOTES:

1. THIS SHUTTER SYSTEM IS DESIGNED IN ACCORDANCE WITH THE SOUTH FLORIDA BUILDING CODE, 1994 EDITION.
2. POSITIVE AND NEGATIVE DESIGN PRESSURE CALCULATIONS SHALL BE PERFORMED FOR SPECIFIC JOBS IN ACCORDANCE WITH ASCE 7-88 "MINIMUM DESIGN LOADS FOR BUILDINGS AND OTHER STRUCTURES." TABLES SHALL BE REFERENCED AT APPROPRIATE DESIGN LOADS.
3. STORM PANELS SHALL BE 20 GAUGE STEEL (t = .038") CONFORMING TO ASTM A653-94, HIGH STRENGTH LOW ALLOY, TYPE 2, GRADE 50, GALVANIZED IN ACCORDANCE WITH ASTM G60. EXTRUSIONS SHOWN SHALL BE 6063-T6 ALUMINUM, U.O.N.
4. PRODUCT MARKINGS SHALL BE WITHIN 12" OF ONE END OF THE PANEL WITH A MIN. OF ONE MARKING PER PANEL AND SHALL BE LABELED AS FOLLOWS:

   B H P C O
   FT. LAUDERDALE, FL.
   DADE COUNTY PROD. APPRD.
5. ALL BOLTS AND WASHERS SHALL BE GALVANIZED OR STAINLESS STEEL WITH A MINIMUM TENSILE STRENGTH OF 60 KSI.
6. TOP & BOTTOM DETAILS SHOWN MAY BE INTERCHANGED AS FIELD CONDITIONS DICTATE. PANELS MAY BE MOUNTED HORIZONTALLY WHERE APPLICABLE.
7. PANELS SHALL BE FASTENED AT MID SPAN W/ 1/4-20 x 1" BOLTS WITH DIE CAST ALUMINUM WASHERED WING NUTS OR JACK NUTS (SEE TYPICAL ELEVATION 8). FOR SPANS LESS THAN 33", OVERLAP FASTENERS ARE NOT REQUIRED.
8. THE DETAILS AND SPECIFICATIONS SHOWN HEREIN REPRESENT THE PRODUCTS TESTED FOR IMPACT, CYCLIC AND UNIFORM STATIC AIR PRESSURE LOADING IN CONFORMANCE WITH DADE COUNTY PROTOCOLS PA 201,202, AND 203. DESIGN IS BASED ON CTC TEST REPORTS No. 96-002, No. 96-029, No. 97-061 & No. 98-020.
9. AT LEAST ONE WARNING NOTE PER OPENING SHALL BE PLACED IN A CONSPICUOUS LOCATION ON ANY OF THE COMPONENTS OF THE STORM PANEL SYSTEM ADVISING THE HOME OWNER OR TENANT THAT THE STORM PANELS WILL NOT OFFER HURRICANE PROTECTION UNLESS ALL REINFORCING BOLTS ARE PROPERLY INSTALLED.

PRODUCT RENEWED

ACCEPTANCE No. 00-0426.06

EXPIRATION DATE July 31, 2003

By Helmy A. Meker

PRODUCT CONTROL DIVISION
BUILDING CODE COMPLIANCE OFFICE

APPROVED AS COMPLYING WITH THE SOUTH FLORIDA BUILDING CODE

DATE November 26 1998

BY Helmy A. Meker

PRODUCT CONTROL DIVISION
BUILDING CODE COMPLIANCE OFFICE

ACCEPTANCE NO. 98-0713.01

KNEZEVICH & ASSOCIATES, INC.
CONSULTING ENGINEERS • PRODUCT TESTING
641 MOKENA DRIVE•MIAMI SPRINGS, FLORIDA 33166
MIAMI (305) 883-9571 FT. LAUDERDALE (954) 677-9500
FAX: (305) 883-9572

COPYRIGHT 1998 KNEZEVICH & ASSOCIATES, INC.

20 GA STEEL STORM PANEL

ALL BROWARD HURRICANE PANEL, CO.
480 WEST McNAB ROAD
FORT LAUDERDALE, FL 33309
(954) 974-2300

revisions			
no	date	by	description
1	06/23/98		PREVIOUSLY KA 95-701
2	10/20/98	JWK	COUNTY COMMENTS

V.J. KNEZEVICH
PROFESSIONAL ENGINEER
FL License No: PE 0070983

OCT 20 1998

date 06/23/98	
scale AS NOTED	drawn by MC
design by VJK	checked by VJK
drawing no. 98-128	
sheet 1 of 7	

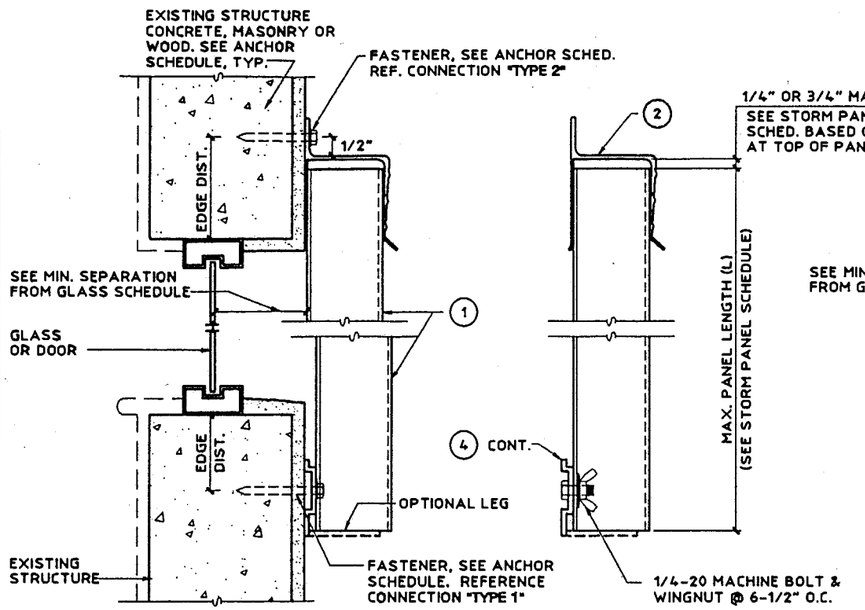

ANGLE TO WALL DETAIL

PANEL TO ANGLE DETAIL

(A) WALL MOUNT SECTION

SCALE : 3" = 1'-0"

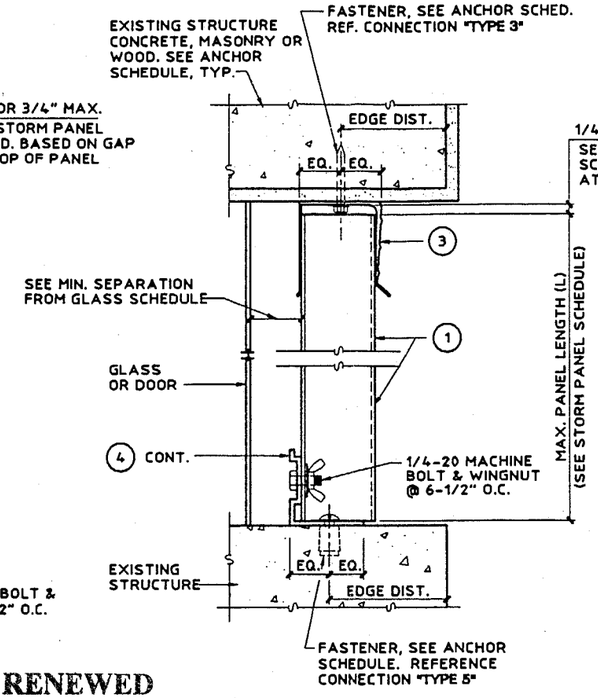

(B) CEILING/INSIDE MOUNT SECTION

SCALE : 3" = 1'-0"

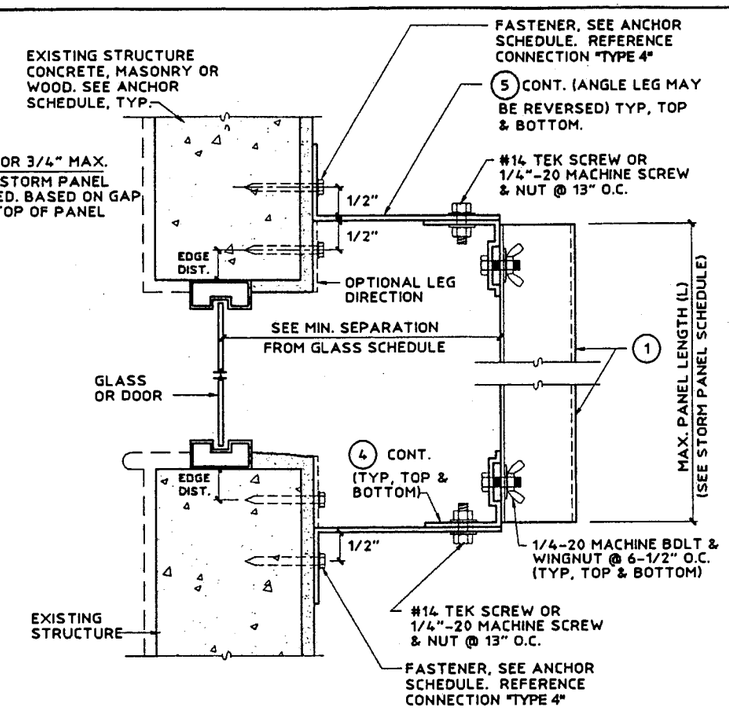

(C) BUILD-OUT MOUNT SECTION

SCALE : 3" = 1'-0"

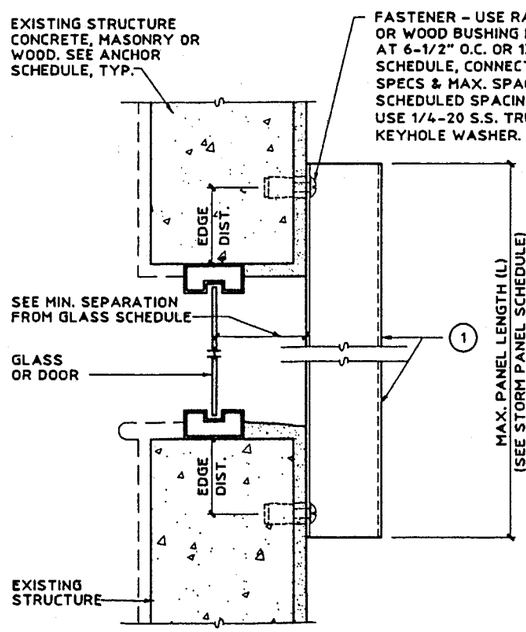

(D) DIRECT MOUNT SECTION

SCALE : 3" = 1'-0"

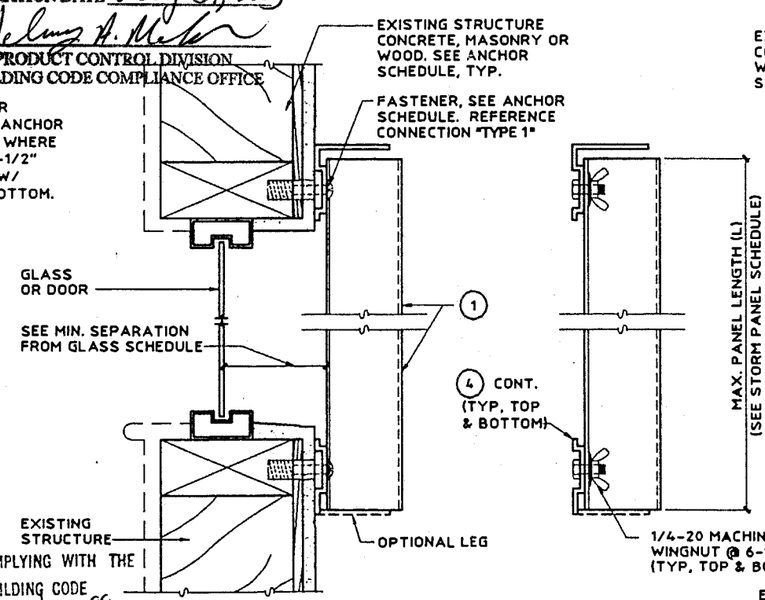

ANGLE TO WALL DETAIL

PANEL TO ANGLE DETAIL

(E) WALL MOUNT SECTION

SCALE : 3" = 1'-0"

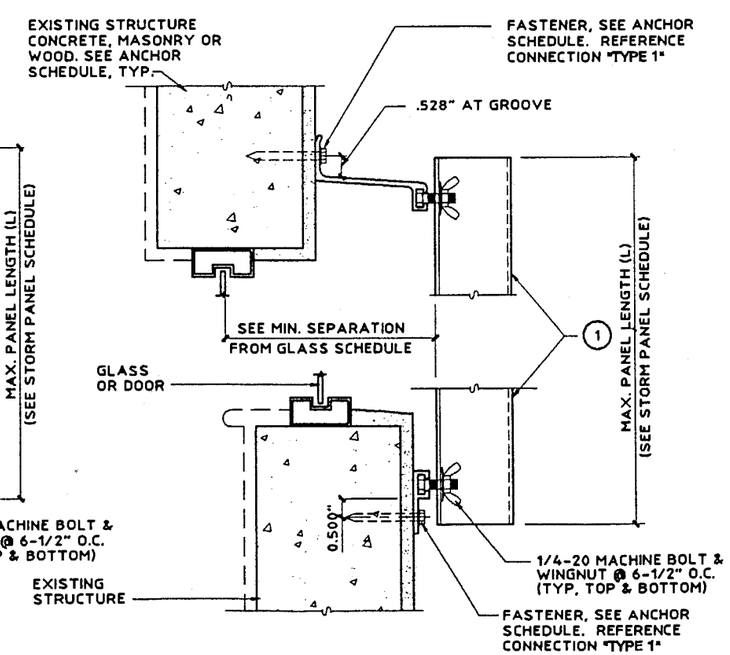

(V) WALL MOUNT SECTION

SCALE : 3" = 1'-0"

PRODUCT RENEWED

ACCEPTANCE No. 00-0426.06

EXPIRATION DATE July 31, 2003

By Helmy A. Maher

PRODUCT CONTROL DIVISION

BUILDING CODE COMPLIANCE OFFICE

APPROVED AS COMPLYING WITH THE SOUTH FLORIDA BUILDING CODE

DATE November 20 1998

BY Helmy A. Maher

PRODUCT CONTROL DIVISION

BUILDING CODE COMPLIANCE OFFICE

ACCEPTANCE NO. 98-0713.01

KNEZEVICH & ASSOCIATES, INC.
CONSULTING ENGINEERS • PRODUCT TESTING
641 MOKENA DRIVE•MIAMI SPRINGS, FLORIDA 33166
MIAMI (305) 883-9571 FT. LAUDERDALE (954) 677-9500
FAX: (305) 883-9572

COPYRIGHT 1998 KNEZEVICH & ASSOCIATES, INC.

20 GA STEEL STORM PANEL

ALL BROWARD HURRICANE PANE CO.
400 WEST MCNAB ROAD
FORT LAUDERDALE, FL 33309
(954) 974-6300

revisions			
no.	date	by	description
1	06/23/98		PREVIOUSLY KA 95-701
2	10/20/98	JWK	COUNTY COMMENTS

V.J. KNEZEVICH
PROFESSIONAL ENGINEER
FL License No: PE 0010983

OCT 20 1998

date 06/23/98	
scale AS NOTED	drawn by MC
design by VJK	checked by VJK

drawing no. 98-128

sheet 2 of 7

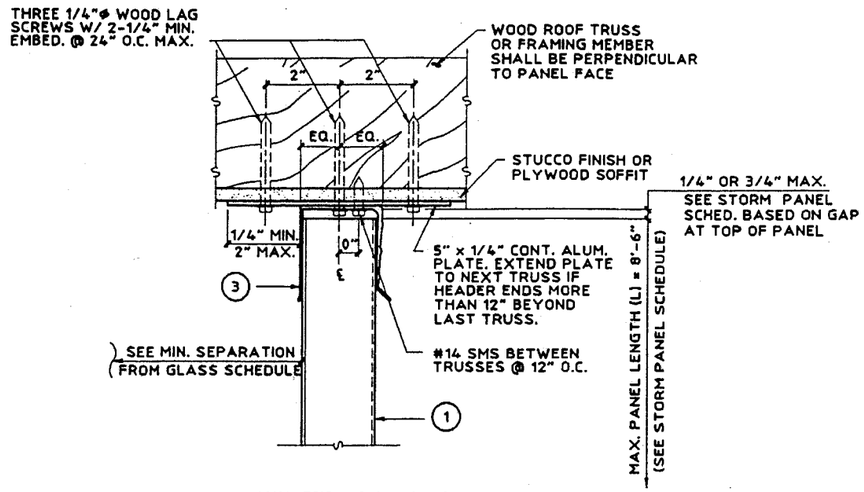

(MAX DESIGN LOAD ± 62 PSF)

(F) SOFFIT CONNECTION DETAIL

SCALE : 3" = 1'-0"

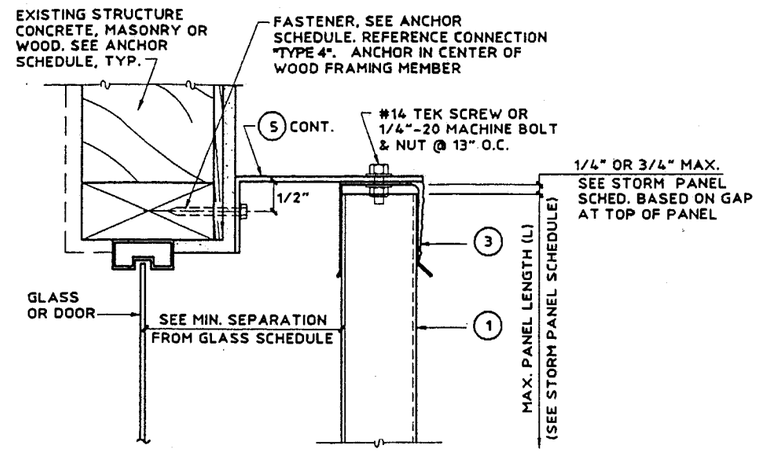

(G) BUILD-OUT SECTION

SCALE : 3" = 1'-0"

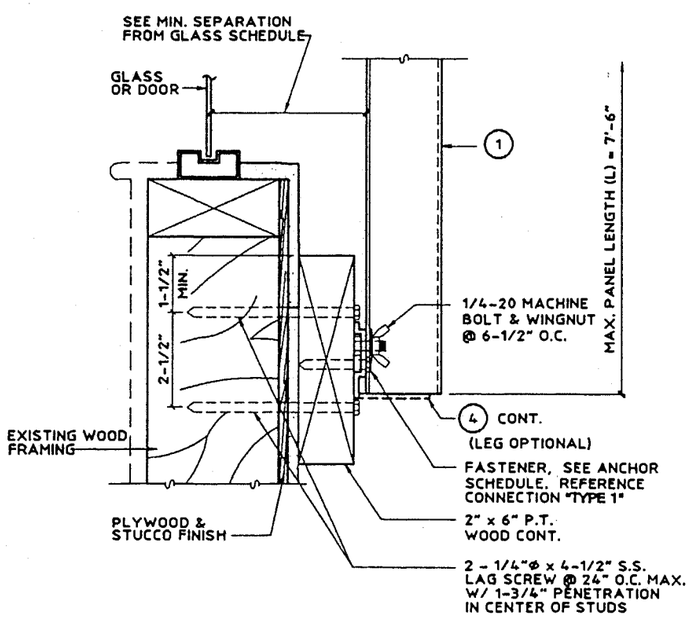

(MAX DESIGN LOAD ± 72 PSF)

(H) ALT. WALL MOUNT SECTION

SCALE : 3"= 1'- 0"

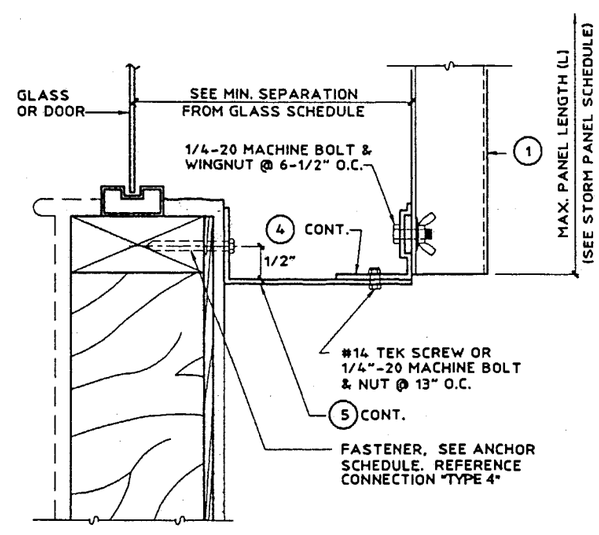

(I) BUILD-OUT SECTION

SCALE : 3" = 1'-0"

PRODUCT RENEWED

ACCEPTANCE No. 00-0426.06

EXPIRATION DATE July 31, 2003

By Helmy A. Maker

PRODUCT CONTROL DIVISION
BUILDING CODE COMPLIANCE OFFICE

APPROVED AS COMPLYING WITH THE SOUTH FLORIDA BUILDING CODE
DATE November 26, 1998
BY Helmy A. Maker
PRODUCT CONTROL DIVISION
BUILDING CODE COMPLIANCE OFFICE
ACCEPTANCE NO. 98-0713.01

KNEZEVICH & ASSOCIATES, INC.
CONSULTING ENGINEERS • PRODUCT TESTING
641 MOKENA DRIVE•MIAMI SPRINGS, FLORIDA 33166
MIAMI (305) 883-9571 FT. LAUDERDALE (954) 677-9500
FAX: (305) 883-9572

COPYRIGHT 1998 KNEZEVICH & ASSOCIATES, INC.

20 GA STEEL STORM PANEL

ALL BROWARD HURRICANE PANEL, CO.
450 WEST McNAB ROAD
FORT LAUDERDALE, FL 33309
(954) 974-3300

revisions

no	date	by	description
1	06/23/98		PREVIOUSLY KA 95-701
2	10/20/98	JWK	COUNTY COMMENTS

V.J. KNEZEVICH
PROFESSIONAL ENGINEER
FL License No: PE 0010983

OCT 20 1998

date 06/23/98
scale AS NOTED
drawn by MC
design by VJK
checked by VJK
drawing no. 98-128
sheet 3 of 7

TABLE 1 — STORM PANEL SCHEDULE

DESIGN LOAD W (PSF)	MOUNTINGS USING PIECE (4), (9) OR (10) TOP & BOTTOM — (A) L max. (FT-IN)		ANY MOUNTING CONDITIONS (MAX. 1/4" SPACE BETWEEN PANEL AND HEADER) — (B) L max. (FT-IN)	ANY MOUNTING CONDITIONS (MAX. 3/4" SPACE BETWEEN PANEL AND HEADER) — (C) L max. (FT-IN)
	POS. LOAD	NEG. LOAD	POS. LOAD NEG. LOAD	POS. LOAD NEG. LOAD
40.0	11 - 5	11 - 5	11 - 5	8 - 8
45.0	11 - 5	11 - 5	11 - 5	8 - 8
50.0	11 - 1	11 - 4	11 - 1	8 - 8
55.0	10 - 6	10 - 10	10 - 6	8 - 8
60.0	10 - 1	10 - 4	10 - 1	8 - 8
62.0	9 - 11	10 - 2	9 - 11	8 - 8
65.0	9 - 8	9 - 11	9 - 8	8 - 8
70.0	9 - 4	9 - 7	9 - 4	8 - 6
72.0	9 - 2	9 - 5	9 - 2	8 - 4
75.0	9 - 0	9 - 3	9 - 0	8 - 0
80.0	8 - 9	8 - 11	8 - 9	7 - 6
90.0	7 - 10	8 - 3	7 - 10	6 - 8
100.0	7 - 1	7 - 5	7 - 1	6 - 0
110.0	6 - 5	6 - 9	6 - 5	5 - 5
120.0	5 - 11	6 - 2	5 - 11	5 - 0
130.0	5 - 5	5 - 8	5 - 5	4 - 7
140.0	5 - 0	5 - 3	5 - 0	4 - 3
150.0	4 - 8	4 - 11	4 - 8	4 - 0
160.0	4 - 5	4 - 7	4 - 5	3 - 9
170.0	4 - 2	4 - 4	4 - 2	3 - 6
180.0	3' - 11	4 - 1	3' - 11	3 - 4
190.0	3 - 8	3 - 11	3 - 8	3 - 1
200.0	3 - 7	3 - 9	3 - 7	3 - 0
210.0	3 - 4	3 - 6	3 - 4	2 - 10

TABLE 2 — MIN. SEPARATION FROM GLASS SCHEDULE

POSITIVE DESIGN LOAD(W) (PSF)	ACTUAL SHUTTER SPAN (L) (FT - IN)	MINIMUM SEPARATION FOR INSTALLATIONS 30' OR LESS ABOVE GRADE (INCHES)	MINIMUM SEPARATION FOR INSTALLATIONS GREATER THAN 30' ABOVE GRADE (INCHES)
40.0	5 - 0	2-3/8	1-1/2
	8 - 8	2-3/8	1-3/4
	11 - 5	2-7/8	2-5/8
45.0	4 - 0	2-3/8	1-1/4
	8 - 8	2-3/8	1-3/4
	11 - 5	2-7/8	2-7/8
50.0	5 - 0	2-3/8	1-1/4
	8 - 8	2-3/8	1-7/8
	11 - 4	3	3
60.0	5 - 0	2-3/8	1-1/4
	8 - 8	2-3/8	1-7/8
	10 - 8	2-7/8	2-7/8
70.0	5 - 0	2-3/8	1-1/4
	8 - 8	2-3/8	2
	9 - 11	2-7/8	2-5/8
80.0	5 - 0	2-3/8	1-3/8
	8 - 8	2-3/8	2-1/8
	8 - 11	2-7/8	2-1/4
90.0	5 - 0	2-3/8	1-3/8
	8 - 3	2-3/8	2-1/8
100.0	5 - 0	2-3/8	1-3/8
	7 - 5	2-3/8	1-7/8
110.0	5 - 0	2-3/8	1-3/8
	6 - 9	2-3/8	1-3/4
120.0	5 - 0	2-3/8	1-3/8
	6 - 2	2-3/8	1-5/8
130.0	5 - 0	2-3/8	1-3/8
	5 - 8	2-3/8	1-1/2
150.0	4 - 11	2-3/8	1-3/8
170.0	4- 4	2-3/8	1-3/8
190.0	3 - 11	2-3/8	1-1/4
210.0	3 - 6	2-3/8	1-1/4

NOTES:

1. ENTER TABLE 1 WITH THE OPENING'S POSITIVE AND NEGATIVE DESIGN LOADS TO DETERMINE MAX. PANEL LENGTH.
   - FOR COLUMN (A) REFERENCE THE ALLOWABLE SPANS AT BOTH THE POSITIVE AND NEGATIVE LOADS, AND CHOOSE THE SMALLER OF THE OBTAINED VALUES.
   - FOR COLUMNS (B) & (C) REFERENCE THE ALLOWABLE SPANS BASED ON THE HIGHER OF THE POSITIVE AND NEGATIVE LOADS.
2. REFERENCE APPROPRIATE COLUMN IN STORM PANEL SCHEDULE BASED ON MOUNTING CONDITION IN FIELD.
   - COLUMN (A) MAY BE USED ONLY WHERE STUD ANGLE IS USED TOP AND BOTTOM.
   - COLUMN (B) MAY BE USED FOR ANY DETAILED CONDITIONS, INCLUDING DIRECT MOUNT. IF HEADER IS USED, MAX. GAP EQUALS 1/4".
   - COLUMN (C) MAY BE USED FOR ANY DETAILED CONDITIONS, IF HEADER IS USED, MAX. GAP EQUALS 3/4".
3. ENTER TABLE 2 WITH POSITIVE DESIGN LOAD TO DETERMINE MIN. SEPARATION FROM GLASS.
4. FOR DESIGN LOADS BETWEEN TABULATED VALUES, USE NEXT HIGHER LOAD OR LINEAR INTERPOLATION MAY BE USED TO DETERMINE ALLOWABLE PANEL LENGTH.

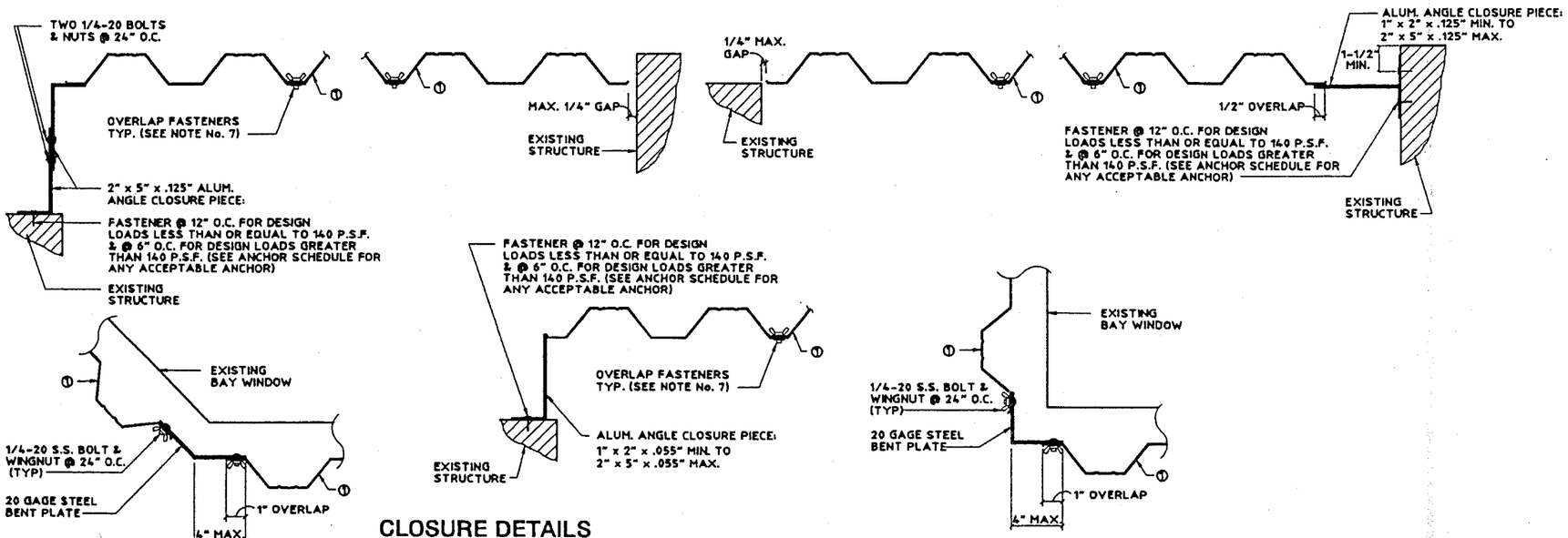

CLOSURE DETAILS

SCALE: 1-1/2" = 1'-0" (PLAN VIEWS)

PRODUCT RENEWED

ACCEPTANCE No. 00-0426.06

EXPIRATION DATE July 31, 2003

By Helmy A. Makar

PRODUCT CONTROL DIVISION
BUILDING CODE COMPLIANCE OFFICE

APPROVED AS COMPLYING WITH THE SOUTH FLORIDA BUILDING CODE

DATE November 26 19 98

BY Helmy A. Makar

PRODUCT CONTROL DIVISION
BUILDING CODE COMPLIANCE OFFICE

ACCEPTANCE NO. 98-0713.01

KNEZEVICH & ASSOCIATES, INC.
CONSULTING ENGINEERS • PRODUCT TESTING
641 MOKENA DRIVE • MIAMI SPRINGS, FLORIDA 33166
MIAMI (305) 883-9571 FT. LAUDERDALE (954) 677-9500
FAX: (305) 883-9572

COPYRIGHT 1998 KNEZEVICH & ASSOCIATES, INC.

20 GA STEEL STORM PANEL

ALL BROWARD HURRICANE PANEL, CO.
480 WEST McNAB ROAD
FORT LAUDERDALE, FL 33309
(954) 974-2300

revisions			
no.	date	by	description
1	06/23/98		PREVIOUSLY KA 95-701
2	10/20/98	JWK	COUNTY COMMENTS

V.J. KNEZEVICH
PROFESSIONAL ENGINEER
FL License No: PE 0010983

OCT 20 1998

date 06/23/98	
scale AS NOTED	drawn by MC
design by VJK	checked by VJK
drawing no. 98-128	
sheet 4 of 7	

10/20/98 16:47

ANCHOR SCHEDULE

FASTENER SPACING (INCHES) REQUIRED FOR VARIOUS DESIGN LOADS AND SPANS/PANEL LENGTHS

EXISTING STRUCTURE	ANCHOR TYPE	LOAD (W) PSF MAX. (SEE NOTE 1)	2" EDGE DISTANCE															3" EDGE DISTANCE													
			SPANS UP TO 6'-0" (SEE NOTE 1)					SPANS UP TO 8'-8" (SEE NOTE 1)					SPANS UP TO 11'-4" (SEE NOTE 1)					SPANS UP TO 6'-0" (SEE NOTE 1)					SPANS UP TO 8'-8" (SEE NOTE 1)					SPANS UP TO 11'-4" (SEE NOTE 1)				
			CONNECTION TYPE					CONNECTION TYPE					CONNECTION TYPE					CONNECTION TYPE					CONNECTION TYPE					CONNECTION TYPE				
			1	2	3	4	5	1	2	3	4	5	1	2	3	4	5	1	2	3	4	5	1	2	3	4	5	1	2	3	4	5
MIN. 3,000 PSI CONCRETE	1/4"ø ITW TAPCON W/ 1-3/4" MIN. EMBEDMENT	56	13	13	13	13	13	13	10	10	9	10	13	5	8	7	7	13	13	13	13	13	13	11	12	10	12	13	6.5	9	7	9
		62	13	13	13	12	13	13	8	9	8	9	13	5	7	6	7	13	13	13	13	13	13	9	11	9	10	13	5	8	7	8
		72	13	13	11	10	11	13	6	8	7	8	13	4	6.5	6	6.5	13	13	13	11	13	13	6.5	9	7	9	13	4	7	6.5	7
		105	13	6	8	7	7	13	4	6.5	6	6.5	13	4	6.5	6	6.5	13	6.5	9	7	9	13	4	7	6.5	7	13	4	7	6.5	7
		210	13	4	6.5	6	6.5	13	4	6.5	6	6.5	13	4	6.5	6	6.5	13	4	7	6.5	7	13	4	7	6.5	7	13	4	7	6.5	7
	1/4"ø RAWL CALK-IN W/ 7/8" EMBEDMENT & 1/4-20 SIDEWALK BOLT (3/4"ø HEAD)	56	13	13	12	13	12	13	10	8	9	8	13	5	6.5	7	6	13	13	13	13	13	13	13	13	11	13	13	7	10	8	10
		62	13	13	11	12	10	13	8	7	8	7	13	4	5	6	5	13	13	13	13	13	13	10	12	10	12	13	6	9	7	9
		72	13	13	9	10	9	13	6	6.5	7	6.5	13	4	5	6	5	13	13	13	12	13	13	7	10	8	10	13	5	8	7	8
		105	13	5	6.5	7	6.5	13	4	5	6	5	13	4	5	6	5	13	7	10	8	10	13	5	8	7	8	13	5	8	7	8
		210	13	4	5	6	5	13	4	5	6	5	13	4	5	6	5	13	5	8	7	8	13	5	8	7	8	13	5	8	7	8
	1/4"ø ELCO MALE/FEMALE "PANELMATE" W/ 1-1/4" MIN. EMBED. & 1/4-20 MACHINE SCREW/NUT	56	13	13	8	6	7	13	5	5	4	5	10		4	3	4	13	13	9	6.5	9	13	5	6	4	6	10		4	3	4
		62	13	12	7	5	7	12	3	5	4	5	9		3	3	3	13	12	8	5	8	12	4	5	4	5	9		4	3	4
		72	13	6.5	6	4	6	10		4	3	4	8		3		3	13	7	7	5	7	10	3	5	3	4	8		4	3	4
		105	10		4	3	4	8		3		3	8		3		3	10		5	3	4	8		4	3	4	8		4	3	4
		210	8		3		3	8		3		3	8		3		3	8		4	3	4	8		4	3	4	8		4	3	4

ANCHOR SCHEDULE

FASTENER SPACING (INCHES) REQUIRED FOR VARIOUS DESIGN LOADS AND SPANS/PANEL LENGTHS

EXISTING STRUCTURE	ANCHOR TYPE	LOAD (W) PSF MAX. (SEE NOTE 1)	3/4" EDGE DISTANCE														
			SPANS UP TO 6'-0" (SEE NOTE 1)					SPANS UP TO 8'-8" (SEE NOTE 1)					SPANS UP TO 11'-4" (SEE NOTE 1)				
			CONNECTION TYPE					CONNECTION TYPE					CONNECTION TYPE				
			1	2	3	4	5	1	2	3	4	5	1	2	3	4	5
WOOD	1/4"ø WOOD LAG W/ 1-3/4" MIN. THREAD EMBEDMENT SHEAR PARALLEL TO WOOD GRAIN (1-3/4" MIN.)	56	13	13	10	13	10	13	10	7	9	7	13	5	5	6.5	5
		62	13	13	9	11	9	13	8	6.5	8	6.5	13	4	5	6	5
		72	13	13	8	10	8	13	5	5	7	5	13	4	4	5	4
		105	13	5	5	7	5	13	4	4	5	4	13	4	4	5	4
		210	13	4	4	5	4	13	4	4	5	4	13	4	4	5	4
	1/4"ø WOOD LAG W/ 1-3/4" MIN. THREAD EMBEDMENT SHEAR PERPENDICULAR TO WOOD GRAIN (1-3/4" MIN.)	56	13	13	8	13	8	13	10	5	9	5	13	5	4	6.5	4
		62	13	13	7	11	7	13	8	5	8	5	13	4	4	6	4
		72	13	13	6.5	10	6.5	13	5	4	7	4	13	4	3	5	3
		105	13	5	4	7	4	13	4	3	5	3	13	4	3	5	3
		210	13	4	3	5	3	13	4	3	5	3	13	4	3	5	3
	BRASS WOOD BUSHING W/ 7/8" MIN. EMBED.	56	13	13	7	5	7	10	3	5	3	5	7		4		4
		62	13	9	7	4	6.5	9	3	4	3	4	7		3		3
		72	11	5	6	3	5	8		4		4	6.5		3		3
		105	8		4		4	6.5		3		3	6.5		3		3
		210	6.5		3		3	6.5		3		3	6.5		3		3
	1/4"ø ELCO MALE/FEMALE "PANELMATE" W/ 1-7/8" MIN. EMBEDMENT	56	13	13	13	13	13	13	13	13	13	13	13	8	10	10	10
		62	13	13	13	13	13	13	12	11	12	11	13	7	9	9	9
		72	13	13	13	13	13	13	8	10	10	10	13	6	8	8	8
		105	13	8	10	10	10	13	6	8	8	8	13	6	8	8	8
		210	13	6	8	8	8	13	6	8	8	8	13	6	8	8	8

ANCHOR SCHEDULE

FASTENER SPACING (INCHES) REQUIRED FOR VARIOUS DESIGN LOADS AND SPANS/PANEL LENGTHS

EXISTING STRUCTURE	ANCHOR TYPE	LOAD (W) PSF MAX. (SEE NOTE 1)	2" EDGE DISTANCE															3" EDGE DISTANCE													
			SPANS UP TO 6'-0" (SEE NOTE 1)					SPANS UP TO 8'-8" (SEE NOTE 1)					SPANS UP TO 11'-4" (SEE NOTE 1)					SPANS UP TO 6'-0" (SEE NOTE 1)					SPANS UP TO 8'-8" (SEE NOTE 1)					SPANS UP TO 11'-4" (SEE NOTE 1)				
			CONNECTION TYPE					CONNECTION TYPE					CONNECTION TYPE					CONNECTION TYPE					CONNECTION TYPE					CONNECTION TYPE				
			1	2	3	4	5	1	2	3	4	5	1	2	3	4	5	1	2	3	4	5	1	2	3	4	5	1	2	3	4	5
HOLLOW CONCRETE BLOCK	1/4"ø ITW TAPCON W/ 1-1/4" MIN. EMBEDMENT	56	13	13	6.5	4	6.5	9	3	4	3	4	7		3		3	13	13	7	4	7	10	3	5	3	5	7		4		3
		62	12	8	6	4	5	8		4		4	6		3		3	13	9	6.5	4	6.5	9	3	4	3	4	7		3		3
		72	10	4	5	3	5	7		3		3	6		3			11	5	5	3	5	7		4		4	6.5		3		3
		105	7		3		3	6		3			6		3			7		4		3	6.5		3		3	6.5		3		3
		210	6		3			6		3			6		3			6.5		3		3	6.5		3		3	6.5		3		3
	1/4"ø RAWL CALK-IN W/ 7/8" EMBEDMENT & 1/4-20 SIDEWALK BOLT (3/4"ø HEAD)	56	13	13	7	5	6.5	11	4	4	3	4	8		3		3	13	13	10	6.5	10	13	5	7	4	7	11	3	5	3	5
		62	13	10	6	5	6	10	3	4	3	4	8		3		3	13	13	9	6	9	13	4	6.5	4	6	10		5	3	4
		72	13	6	5	4	5	9		3	3	3	7		3		3	13	7	8	5	7	11	3	5	3	5	9		4	3	4
		105	8		3	3	3	7		3		3	7		3		3	11	3	5	3	5	9		4	3	4	9		4	3	4
		210	7		3		3	7		3		3	7		3		3	9		4	3	4	9		4	3	4	9		4	3	4
	1/4"ø ELCO MALE/FEMALE "PANELMATE" W/ 1-1/4" MIN. EMBED. & 1/4-20 MACHINE SCREW/NUT	56	13	13	8	6	7	13	5	5	4	5	10		4	3	4	13	13	9	6.5	9	13	5	6	4	6	10		4	3	4
		62	13	12	7	5	7	12	3	5	4	5	9		3	3	3	13	12	8	5	8	12	4	5	4	5	9		4	3	4
		72	13	6.5	6	4	6	10		4	3	4	8		3		3	13	7	7	5	7	10	3	5	3	4	8		4	3	4
		105	10		4	3	4	8		3		3	8		3		3	10		5	3	4	8		4	3	4	8		4	3	4
		210	8		3		3	8		3		3	8		3		3	8		4	3	4	8		4	3	4	8		4	3	4

ANCHOR NOTES:

1. PANEL LENGTHS & LOADS SHOWN HERE ARE FOR ANCHOR SPACING ONLY. ALLOWABLE PANEL LENGTHS FOR SPECIFIC LOADS MUST BE LIMITED TO THOSE SHOWN IN TABLE 1, SHEET 4.
2. ENTER TABLE BASED ON THE EXISTING STRUCTURE MATERIAL, ANCHOR TYPE AND EDGE DISTANCE.
3. CHOOSE DESIGN LOAD GREATER THAN OR EQUAL TO NEGATIVE DESIGN LOAD ON BUILDING AND CHOOSE SPAN GREATER THAN OR EQUAL TO SHUTTER SPAN.
4. REFERENCE SPACING FROM APPROPRIATE CONNECTION TYPE. SEE CONNECTION DETAILS FOR IDENTIFICATION OF CONNECTION TYPE.
5. MINIMUM EMBEDMENT AND EDGE DISTANCE EXCLUDES WALL FINISH OR STUCCO.
6. WHERE LAG SCREWS FASTEN TO NARROW FACE OF STUD FRAMING, FASTENER SHALL BE LOCATED IN CENTER OF NOMINAL 2" x 4" (MIN) WOOD STUD. WOOD SHALL BE "SOUTHERN PINE" G = 0.55 OR BETTER DENSITY.
7. ANCHORS SHALL BE INSTALLED IN ACCORDANCE WITH WITH MANUFACTURERS RECOMMENDATIONS W/ MIN. EMBEDMENT INDICATED ABOVE.
8. 1/4-20 TRUSS HEAD BOLTS MAY BE USED IN LIEU OF 1/4-20 SIDEWALK BOLTS.
9. ▨ DESIGNATES ANCHOR CONDITIONS WHICH ARE NOT ACCEPTABLE USES.
10. EXISTING STRUCTURE MAY BE CONCRETE, HOLLOW BLOCK, OR WOOD FRAMING. REFERENCE ANCHOR SCHEDULE FOR PROPER ANCHOR TYPE BASED ON TYPE OF EXISTING STRUCTURE.

✱ REQUIRED FOR DIRECT MOUNT @ 6.5" OR 13" SPACING ONLY. SPACINGS NOT TO EXCEED VALUE SPECIFIED IN ANCHOR SCHEDULE.

PRODUCT RENEWED

ACCEPTANCE No. 00-0426-06

EXPIRATION DATE July 31, 2003

By Helmy A. Shaker

PRODUCT CONTROL DIVISION
BUILDING CODE COMPLIANCE OFFICE

APPROVED AS COMPLYING WITH THE SOUTH FLORIDA BUILDING CODE

DATE November 26 1998

BY Helmy A. Shaker

PRODUCT CONTROL DIVISION
BUILDING CODE COMPLIANCE OFFICE

ACCEPTANCE NO. 98-0713-01

ANCHOR SCHEDULE

FASTENER SPACING (INCHES) REQUIRED FOR VARIOUS DESIGN LOADS AND SPANS/PANEL LENGTHS

EXISTING STRUCTURE	ANCHOR TYPE	LOAD (W) PSF MAX. (SEE NOTE 1)	2" EDGE DISTANCE															3" EDGE DISTANCE													
			SPANS UP TO 6'-0" (SEE NOTE 1)					SPANS UP TO 8'-8" (SEE NOTE 1)					SPANS UP TO 11'-4" (SEE NOTE 1)					SPANS UP TO 6'-0" (SEE NOTE 1)					SPANS UP TO 8'-8" (SEE NOTE 1)					SPANS UP TO 11'-4" (SEE NOTE 1)				
			CONNECTION TYPE					CONNECTION TYPE					CONNECTION TYPE					CONNECTION TYPE					CONNECTION TYPE					CONNECTION TYPE				
			1	2	3	4	5	1	2	3	4	5	1	2	3	4	5	1	2	3	4	5	1	2	3	4	5	1	2	3	4	5
HOLLOW CONCRETE BLOCK	1/4"ø ITW TAPCON W/ 1-1/4" MIN. EMBEDMENT	56	13	13	6.5	4	6.5	9	3	4	3	4	7		3		3	13	13	7	4	7	10	3	5	3	5	7		4		3
		62	12	8	6	4	5	8		4		4	6		3		3	13	9	6.5	4	6.5	9	3	4	3	4	7		3		3
		72	10	4	5	3	5	7		3		3	6		3			11	5	5	3	5	7		4		4	6.5		3		3
		105	7		3		3	6		3			6		3			7		4		3	6.5		3		3	6.5		3		3
		210	6		3			6		3			6		3			6.5		3		3	6.5		3		3	6.5		3		3
	1/4"ø RAWL CALK-IN W/ 7/8" EMBEDMENT & 1/4-20 SIDEWALK BOLT (3/4"ø HEAD)	56	13	13	7	5	6.5	11	4	4	3	4	8		3		3	13	13	10	6.5	10	13	5	7	4	7	11	3	5	3	5
		62	13	10	6	5	6	10	3	4	3	4	8		3		3	13	13	9	6	9	13	4	6.5	4	6	10		5	3	4
		72	13	6	5	4	5	9		3	3	3	7		3		3	13	7	8	5	7	11	3	5	3	5	9		4	3	4
		105	8		3	3	3	7		3		3	7		3		3	11	3	5	3	5	9		4	3	4	9		4	3	4
		210	7		3		3	7		3		3	7		3		3	9		4	3	4	9		4	3	4	9		4	3	4
	1/4"ø ELCO MALE/FEMALE "PANELMATE" W/ 1-1/4" MIN. EMBED. & 1/4-20 MACHINE SCREW/NUT	56	13	13	8	6	7	13	5	5	4	5	10		4	3	4	13	13	9	6.5	9	13	5	6	4	6	10		4	3	4
		62	13	12	7	5	7	12	3	5	4	5	9		3	3	3	13	12	8	5	8	12	4	5	4	5	9		4	3	4
		72	13	6.5	6	4	6	10		4	3	4	8		3		3	13	7	7	5	7	10	3	5	3	4	8		4	3	4
		105	10		4	3	4	8		3		3	8		3		3	10		5	3	4	8		4	3	4	8		4	3	4
		210	8		3		3	8		3		3	8		3		3	8		4	3	4	8		4	3	4	8		4	3	4

KNEZEVICH & ASSOCIATES, INC.
CONSULTING ENGINEERS • PRODUCT TESTING
641 MOKENA DRIVE•MIAMI SPRINGS, FLORIDA 33166
MIAMI (305) 883-9571 FT. LAUDERDALE (954) 677-9500
FAX: (305) 883-9572

COPYRIGHT 1998 KNEZEVICH & ASSOCIATES, INC.

20 GA STEEL STORM PANEL

ALL BROWARD HURRICANE PANEL, CO.
450 WEST MANAB ROAD
FORT LAUDERDALE, FL 33308
(954) 974-3500

revisions

no	date	by	description
1	06/23/98		PREVIOUSLY KA 95-701
2	10/20/98	JWK	COUNTY COMMENTS

V.J. KNEZEVICH
PROFESSIONAL ENGINEER
FL License No: PE 0010983

OCT 20 1998

date 06/23/98	
scale AS NOTED	drawn by MC
design by VJK	checked by VJK

drawing no. 98-128

sheet 5 of 7

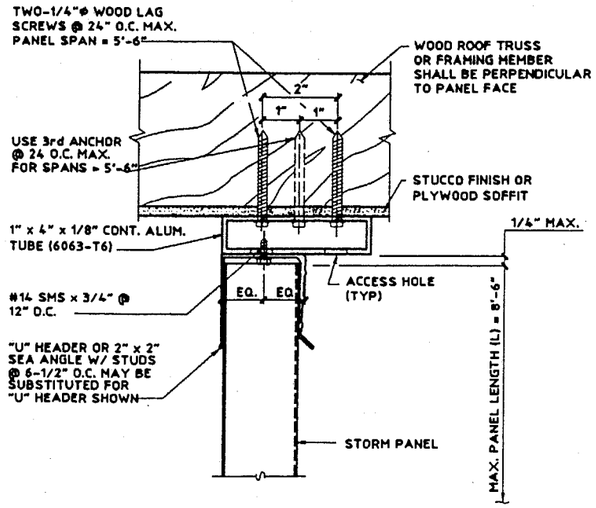

CONNECTION DETAIL (SECTION)

SCALE : 3" = 1'-0"

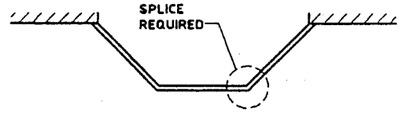

BAY WINDOW

N.T.S.

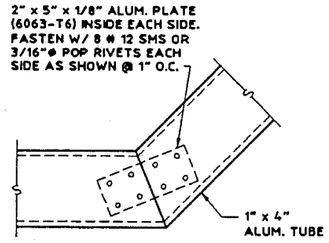

SPLICE DETAIL FOR BAY WINDOW APPLICATIONS

SCALE : 1-1/2" = 1'-0"

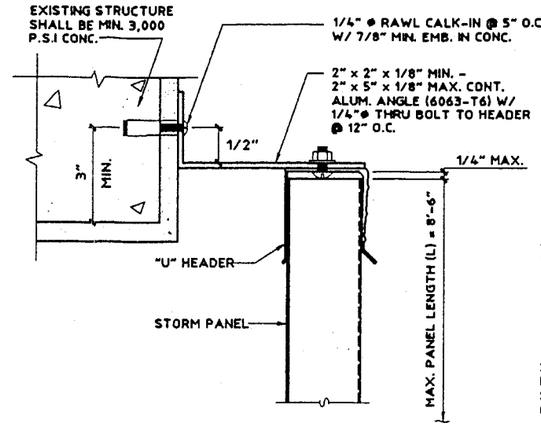

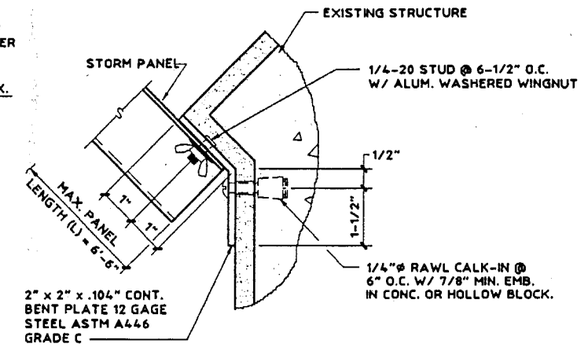

PLAN VIEW
HORIZONTAL PANEL INSTALLATION

(MAX. DESIGN LOAD ± 72 PSF)

(J) SOFFIT CONNECTION DETAIL

NOTE: FOR BAY WINDOWS, FASTEN AT A MAX. 24" SPACING. SPLICE AS SHOWN FOR CORNERS OF BAY WINDOW.

(MAX. DESIGN LOAD ± 72 PSF)

(K) ANGLE BUILD-OUT

SCALE : 3" = 1'-0"

(MAX. DESIGN LOAD ± 72 PSF)

(L) BENT PLATE CONNECTION

SCALE : 3" = 1'-0"

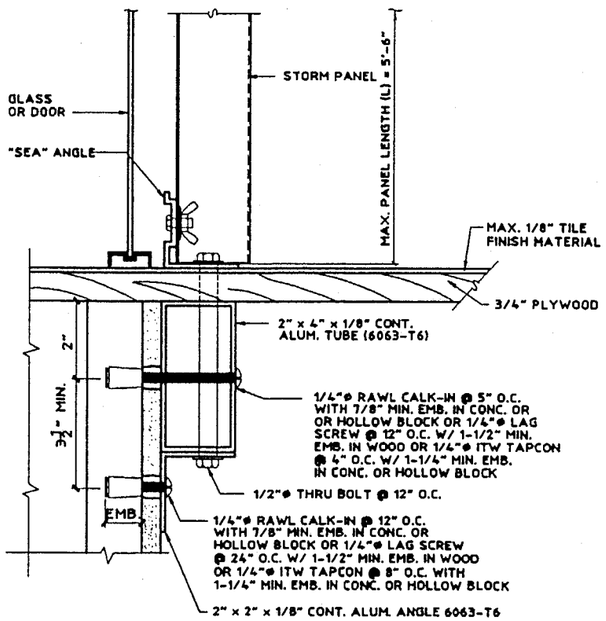

(MAX. DESIGN LOAD ± 72 PSF)

(M) "PASS THRU" DETAIL (IN CONCRETE)

SCALE : 3" = 1'-0"

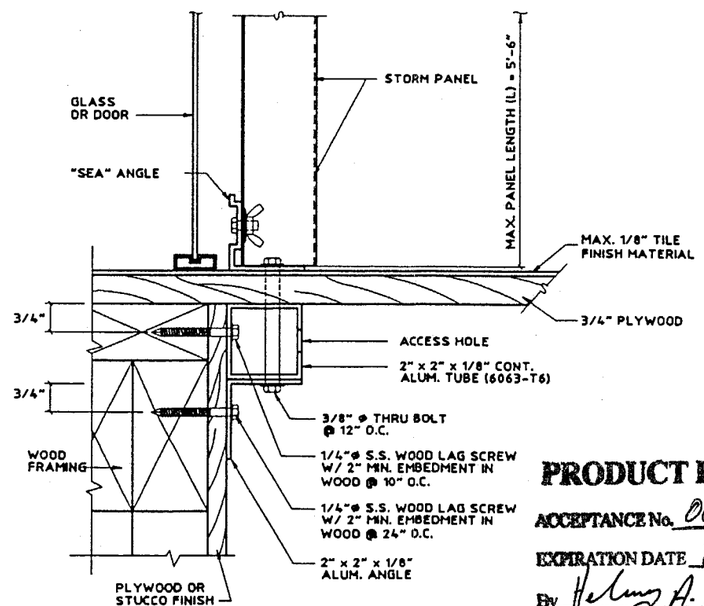

(MAX. DESIGN LOAD ± 72 PSF)

(N) "PASS THRU" DETAIL (IN WOOD)

SCALE : 3" = 1'-0"

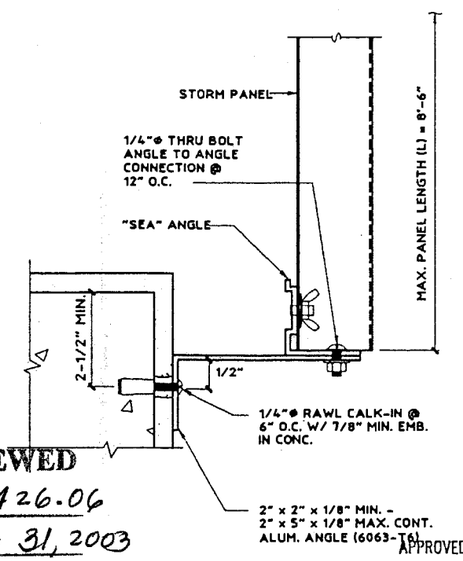

(MAX. DESIGN LOAD ± 72 PSF)

(O) ANGLE BUILD-OUT

SCALE : 3" = 1'-0"

PRODUCT RENEWED

ACCEPTANCE No. 00-0426.06

EXPIRATION DATE July 31, 2003

By Helmy A. Meler

PRODUCT CONTROL DIVISION
BUILDING CODE COMPLIANCE OFFICE

APPROVED AS COMPLYING WITH THE SOUTH FLORIDA BUILDING CODE

DATE November 26 1998

BY Helmy A. Meler

PRODUCT CONTROL DIVISION

BUILDING CODE COMPLIANCE OFFICE

ACCEPTANCE NO. 98-0713.01

KNEZEVICH & ASSOCIATES, INC.
CONSULTING ENGINEERS • PRODUCT TESTING
6411 MOKENA DRIVE·MIAMI SPRINGS, FLORIDA 33166
MIAMI (305) 883-9571 FT. LAUDERDALE (954) 677-9500
FAX: (305) 883-9572

COPYRIGHT 1998 KNEZEVICH & ASSOCIATES, INC.

20 GA STEEL STORM PANEL

ALL BROWARD HURRICANE PANEL, CO.
450 WEST McNAB ROAD
FORT LAUDERDALE, FL 33309
(954) 974-5300

revisions			
no	date	by	description
1	06/23/98	JWK	PREVIOUSLY KA 95-701
2	10/20/98	JWK	COUNTY COMMENTS

V.J. KNEZEVICH
PROFESSIONAL ENGINEER
FL License No: PE 0010983

OCT 20 1998

date 06/23/98

scale AS NOTED | drawn by MC
design by VJK | checked by VJK

drawing no. 98-128

sheet 6 of 7

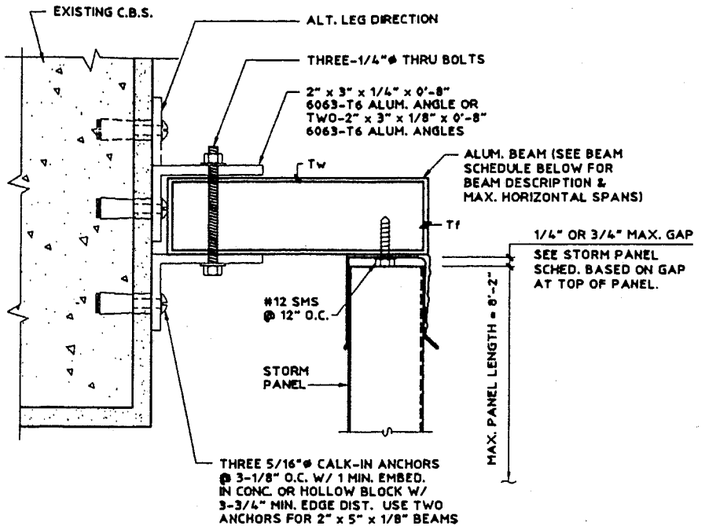

(MAX. DESIGN LOAD ± 72 PSF)

(P) STORM PANEL SUPPORT BEAM

SCALE : 3" = 1'-0"

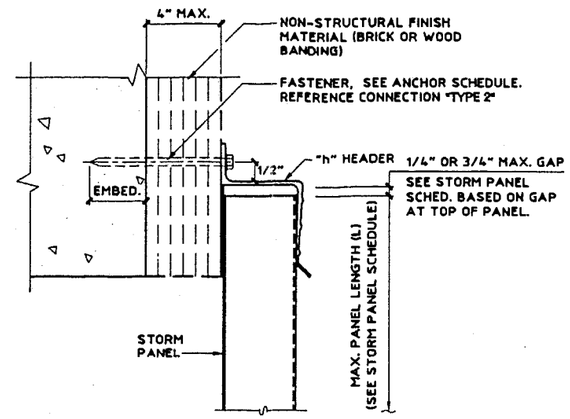

(MAX. DESIGN LOAD = ± 72 P.S.F.)

(Q) WALL MOUNT

SCALE : 3" = 1'-0"

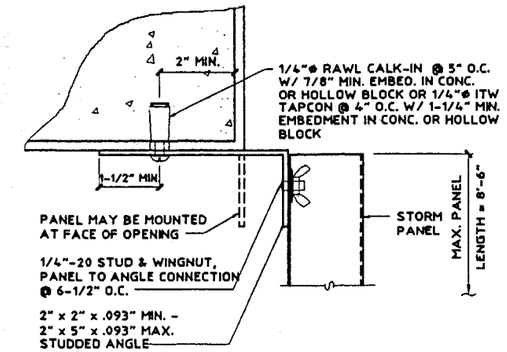

(MAX. DESIGN LOAD ± 72 PSF)

(R) TRAP MOUNT

SCALE : 3" = 1'-0"

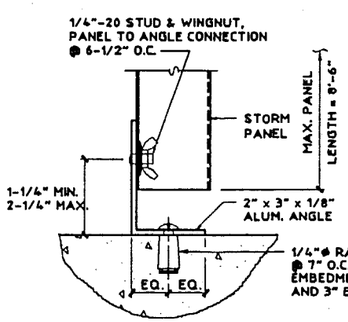

(MAX. DESIGN LOAD ± 72 PSF)

(S) TRAP MOUNT

SCALE : 3" = 1'-0"

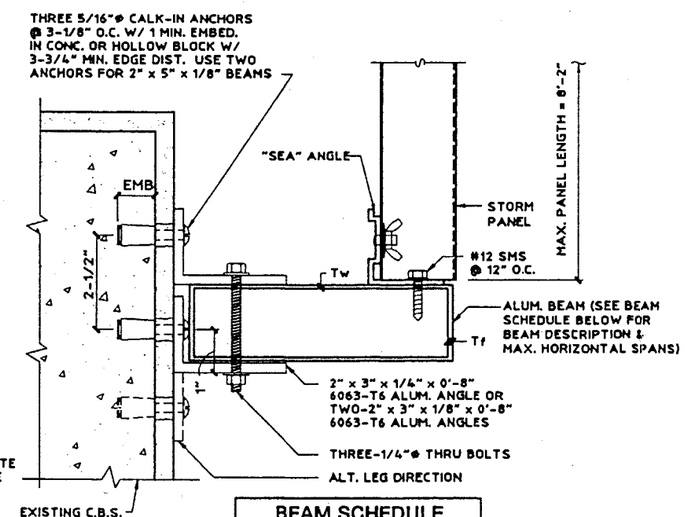

BEAM SCHEDULE		
DESCRIPTION	PANEL SPAN	BEAM SPAN
2" x 5" Tw = .125" Tf = .125"	5'-0"	9'-3"
	8'-2"	7'-11"
2" x 9" Tw = .072" Tf = .224"	5'-0"	15'-7"
	8'-2"	13'-4"

(MAX. DESIGN LOAD ± 72 PSF)

(T) STORM PANEL SUPPORT BEAM

SCALE : 3" = 1'-0"

NOTE: THIS DETAIL MAY BE USED AT TOP OR BOTTOM OF PANEL.

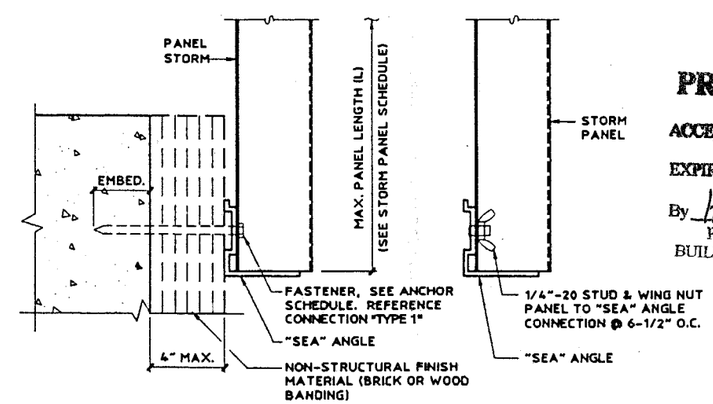

ANGLE TO WALL DETAIL

PANEL TO ANGLE DETAIL

(MAX. DESIGN LOAD = ± 72 P.S.F.)

(U) WALL MOUNT

SCALE : 3" = 1'-0"

PRODUCT RENEWED

ACCEPTANCE No. 00-0426.06

EXPIRATION DATE July 31, 2003

By Helmy A. Meher

PRODUCT CONTROL DIVISION
BUILDING CODE COMPLIANCE OFFICE

APPROVED AS COMPLYING WITH THE SOUTH FLORIDA BUILDING CODE
DATE November 26 1998
BY Helmy A. Meher
PRODUCT CONTROL DIVISION
BUILDING CODE COMPLIANCE OFFICE
ACCEPTANCE NO. 98-0713-01

KNEZEVICH & ASSOCIATES, INC.
CONSULTING ENGINEERS • PRODUCT TESTING
641 MOKENA DRIVE-MIAMI SPRINGS, FLORIDA 33166
MIAMI (305) 883-9571 FT. LAUDERDALE (954) 677-9500
FAX: (305) 883-9572

COPYRIGHT 1998 KNEZEVICH & ASSOCIATES, INC.

20 GA STEEL STORM PANEL

ALL BROWARD HURRICANE PANEL, CO.
480 WEST McNAB ROAD
FORT LAUDERDALE, FL 33309
(954) 974-3300

revisions			
no	date	by	description
1	06/23/98		PREVIOUSLY KA 95-701
2	10/20/98	JWK	COUNTY COMMENTS

V.J. KNEZEVICH
PROFESSIONAL ENGINEER
FL License No: PE 0010983

OCT 20 1998

date 06/23/98	
scale AS NOTED	drawn by MC
design by VJK	checked by VJK
drawing no. 98-128	
sheet 7 of 7	

10/20/98 16:49