MIAMI-DADE

MIAMI-DADE COUNTY, FLORIDA
METRO-DADE FLAGLER BUILDING

BUILDING CODE COMPLIANCE OFFICE
METRO-DADE FLAGLER BUILDING
140 WEST FLAGLER STREET, SUITE 1603
MIAMI, FLORIDA 33130-1563
(305) 375-2901 FAX (305) 375-2908

CONTRACTOR LICENSING SECTION
(305) 375-2527 FAX (305) 375-2558

CONTRACTOR ENFORCEMENT DIVISION
(305) 375-2966 FAX (305) 375-2908

PRODUCT CONTROL DIVISION
(305) 375-2902 FAX (305) 372-6339

PRODUCT CONTROL NOTICE OF ACCEPTANCE

Englert, Inc.
1200 Amboy Avenue
Perth Amboy ,NJ 08862

Your application for Notice of Acceptance (NOA) of:
Englert Series 1300
under Chapter 8 of the Code of Miami-Dade County governing the use of Alternate Materials and Types of Construction, and completely described herein, has been recommended for acceptance by the Miami-Dade County Building Code Compliance Office (BCCO) under the conditions specified herein.

This NOA shall not be valid after the expiration date stated below. BCCO reserves the right to secure this product or material at any time from a jobsite or manufacturer's plant for quality control testing. If this product or material fails to perform in the approved manner, BCCO may revoke, modify, or suspend the use of such product or material immediately. BCCO reserves the right to revoke this approval, if it is determined by BCCO that this product or material fails to meet the requirements of the South Florida Building Code.

The expense of such testing will be incurred by the manufacturer.

ACCEPTANCE NO.: 00-0501.09
EXPIRES: 02/04/2003

Raul Rodriguez
Chief Product Control Division

THIS IS THE COVERSHEET, SEE ADDITIONAL PAGES FOR SPECIFIC AND GENERAL CONDITIONS
BUILDING CODE & PRODUCT REVIEW COMMITTEE

This application for Product Approval has been reviewed by the BCCO and approved by the Building Code and Product Review Committee to be used in Miami-Dade County, Florida under the conditions set forth above.

Francisco J. Quintana, R.A.
Director
Miami-Dade County
Building Code Compliance Office

APPROVED: 11/16/2000

ROOFING ASSEMBLY APPROVAL

Category:	Roofing	**Approval Date:November 16, 2000**
Sub-Category:	07410 Non Structural Metal Roofing	**Expiration Date: February 04, 2003**
Materials:	Steel	
Maximum Design Pressure:	N/A	
Fire Classification:	See General Limitation #1	

TRADE NAMES OF PRODUCTS MANUFACTURED OR LABELED BY APPLICANT:

Product	Dimensions	Test Specifications	Product Description
Series 1300	l = various w = 16" or 20" min. 24 gage	PA 110 & PA 125	Corrosion resistant, galvanized, preformed, standing seam, coated, prefinished, metal panels.
Clip	min. 24 ga. 6 ¼" long 1 ½" wide 1.65" high	PA 114 Appendix E	Corrosion resistant, formed, steel clips for metal panel installation.
Trim Pieces	l = varies w = varies min. 24 ga.	PA 110	Standard flashing and trim pieces. Manufactured for each panel width.

TRADE NAMES OF PRODUCTS MANUFACTURED OTHERS:

Product	Dimensions	Product Description	Manufacturer
#30 Felt	N/A	Saturated organic felt to be used as a nailed underlayment.	generic
Fire Barrier Board ("Dens Deck")	min. ¼" thick	Fire barrier for Class 'A' fire rating.	Georgia-Pacific with current PCA
Fire Barrier ("Roctex")	min. 450 grams/m^2	Fire barrier for Class 'A' fire rating.	Partek Insulations, Inc.
Fasteners (Panel Clips)	min. #10 coarse thread wood screw.	Corrosion resistant, pancake head, self-drilling, self-threading screws	generic
Sealant	N/A	Sealant for use at panel seam.	generic

Frank Zuloaga, RRC
Roofing Product Control Examiner

EVIDENCE SUBMITTED:

Test Agency	Test Identifier	Test Name/Report	Date
Construction Research Laboratory, Inc.	6003C	Uplift Pressure Testing ASTM E 330 Series 1000	Feb. 1994
Morton International	AS-0286-91L	Salt Spray ASTM B 117	Feb. 1986
Morton International	AS-0286-91T	Accelerated Weathering ASTM G 23	Feb. 1986
Architectural Testing Inc.	01-32797.01	PA 100	Nov. 1998
Architectural Testing Inc.	01-32797.02	PA 100	Nov. 1998
Architectural Testing Inc.	01-32797.03	ASTM E 8	Nov. 1998
Architectural Testing Inc.	01-35496-01	PA 125	Dec. 1999

Frank Zuloaga, RRC
Roofing Product Control Examiner

SYSTEMS

SYSTEM A-1: Series 1300 Panel 1 ½" Mechanically Seamed Panel

Deck Type: Wood, Non-insulated

Deck Description: New Construction or Reroof
$^{19}/_{32}$" or greater plywood or wood plank.

Slope Range: 2":12" or greater

Maximum Uplift Pressure: The maximum allowable uplift pressure for 16" panels shall be -52.5 psf.

Deck Attachment: In accordance with applicable Building Code, but in no case shall it be less than # 8 x 1 $^{5}/_{8}$" long screws spaced 6" o.c. In reroofing, where the deck is less than $^{19}/_{32}$" thick (Minimum $^{15}/_{32}$") The above attachment method must be in addition to existing attachment.

Underlayment: Minimum underlayment shall be an ASTM D 226 Type II installed with a minimum 4" side-lap and 6" end-laps. Underlayment shall be fastened with corrosion resistant tin-caps and 1 ¼" annular ring-shank nails, spaced 6" o.c. at all laps and two staggered rows 12" o.c. in the field of the roll.

Valleys: Valley construction shall be in compliance with Roofing Application Standard RAS 133 and with the current published installation instructions and details in Englert Metal Roofing Installation Manual.

Fire Barrier Board: For class A or B fire rating, install minimum ¼" thick Georgia Pacific "Dens Deck" (with current NOA) or minimum 4mm thick of Roctex Oy Ab Insulation, Inc. (with current NOA) "Rocroof" or $^{5}/_{8}$" water resistant type X gypsum sheathing with treated core and facer.

Metal Panels and Accessories: Install the "Series 1300 Panel" and accessories in compliance with the current published installation instructions and details in Englert Metal Roofing Installation Manual. Flashings, penetrations, valley construction and other details shall be constructed in compliance with Roofing Application Standard RAS 133. Panels shall be installed with approved clips, attached to substrate with four corrosion resistant #10 x 1" screws of sufficient length to penetrate through the sheathing $^{3}/_{16}$" at a maximum spacing not to exceed 4 feet o.c.

Frank Zuloaga, RRC
Roofing Product Control Examiner

General Limitations

1. Fire classification is not part of this acceptance, refer to a current Approved Roofing Materials Directory for fire ratings of this product.

2. Anchor clips to be spaced as needed to meet or exceed design pressures as determined in compliance with applicable building Code, but in no case shall it exceed 4 feet o.c. Increased design pressures at perimeter and corner areas may be met through rational analysis by increasing the number of attachment points in those areas. All rational analysis computation shall be prepared, signed and sealed by a Florida licensed Professional Engineer, Registered Architect, or Registered Roof Consultant.

3. Panels shall be roll formed in continuous lengths from eave to ridge not exceeding 45 feet in compliance with Roofing Application Standard RAS 133.

4. All panels shall be permanently labeled with the manufacturer's name or logo, city, state and the following statement: "Miami-Dade County Product Control Approved". All clips shall be stamped with the manufacturer's name and model.

Frank Zuloaga, RRC
Roofing Product Control Examiner

PROFILE DRAWINGS

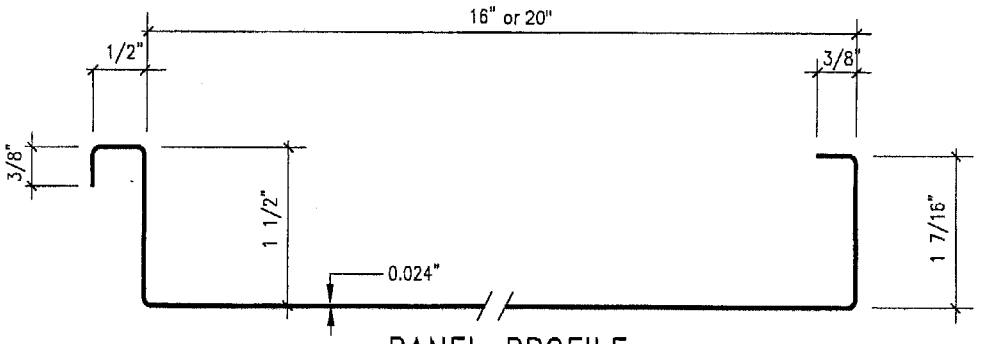

PANEL PROFILE

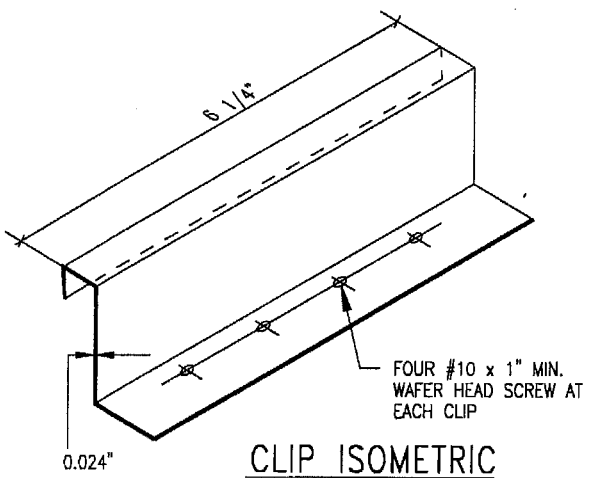

CLIP ISOMETRIC

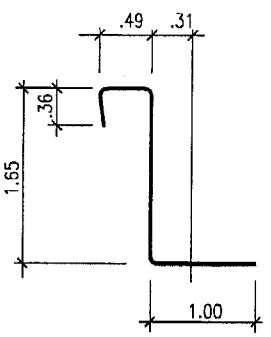

CLIP PROFILE

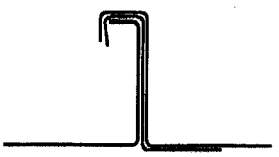

BEFORE SEAMING

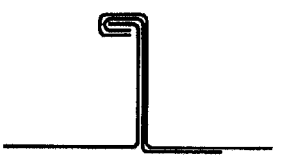

AFTER SEAMING

ENGLERT "SERIES 1300" METAL PANEL AND CLIP"

Frank Zuloaga, RRC
Roofing Product Control Examiner

NOTICE OF ACCEPTANCE STANDARD CONDITIONS

1 Renewal of this Acceptance (approval) shall be considered after a renewal application has been filed and the original submitted documentation, including test supporting data, engineering documents, are no older than eight (8) years.

2 Any and all approved products shall be permanently labeled with the manufacturer's name, city, state, and the following statement: "Miami-Dade County Product Control Approved", or as specifically stated in the specific conditions of this Acceptance.

3 Renewals of Acceptance will not be considered if:
- a) There has been a change in the South Florida Building Code affecting the evaluation of this product and the product is not in compliance with the code changes;
- b) The product is no longer the same product (identical) as the one originally approved;
- c) If the Acceptance holder has not complied with all the requirements of this acceptance, including the correct installation of the product;
- d) The engineer who originally prepared, signed and sealed the required documentation initially submitted, is no longer practicing the engineering profession.

4 Any revision or change in the materials, use, and/or manufacture of the product or process shall automatically be cause for termination of this Acceptance, unless prior written approval has been requested (through the filing of a revision application with appropriate fee) and granted by this office.

5 Any of the following shall also be grounds for removal of this Acceptance:
- a) Unsatisfactory performance of this product or process;
- b) Misuse of this Acceptance as an endorsement of any product, for sales, advertising or any other purposes.

6 The Notice of Acceptance number preceded by the words Miami-Dade County, Florida, and followed by the expiration date may be displayed in advertising literature. If any portion of the Notice of Acceptance is displayed, then it shall be done in its entirety.

7 A copy of this Acceptance as well as approved drawings and other documents, where it applies, shall be provided to the user by the manufacturer or its distributors and shall be available for inspection at the job site at all times. The copies need not be resealed by the engineer.

8 Failure to comply with any section of this Acceptance shall be cause for termination and removal of Acceptance.

9 This Acceptance contains pages 1 through 7.

END OF THIS ACCEPTANCE

Frank Zuloaga, RRC
Roofing Product Control Examiner