MIAMI-DADE

MIAMI-DADE COUNTY, FLORIDA
METRO-DADE FLAGLER BUILDING

BUILDING CODE COMPLIANCE OFFICE
METRO-DADE FLAGLER BUILDING
140 WEST FLAGLER STREET, SUITE 1603
MIAMI, FLORIDA 33130-1563
(305) 375-2901 FAX (305) 375-2908

CONTRACTOR LICENSING SECTION
(305) 375-2527 FAX (305) 375-2558

CONTRACTOR ENFORCEMENT DIVISION
(305) 375-2966 FAX (305) 375-2908

PRODUCT CONTROL DIVISION
(305) 375-2902 FAX (305) 372-6339

PRODUCT CONTROL NOTICE OF ACCEPTANCE

Stanley Access Technologies
65 Scott Swamp Road
Farmington ,CT 06032

Your application for Notice of Acceptance (NOA) of:
Dura-Glide 3000 Automatic Sliding Door (Steel Reinforced)
under Chapter 8 of the Code of Miami-Dade County governing the use of Alternate Materials and Types of Construction, and completely described herein, has been recommended for acceptance by the Miami-Dade County Building Code Compliance Office (BCCO) under the conditions specified herein.

This NOA shall not be valid after the expiration date stated below. BCCO reserves the right to secure this product or material at any time from a jobsite or manufacturer's plant for quality control testing. If this product or material fails to perform in the approved manner, BCCO may revoke, modify, or suspend the use of such product or material immediately. BCCO reserves the right to revoke this approval, if it is determined by BCCO that this product or material fails to meet the requirements of the South Florida Building Code.

The expense of such testing will be incurred by the manufacturer.

ACCEPTANCE NO.: 00-0508.08
EXPIRES: 10/26/2003

Raul Rodriguez
Chief Product Control Division

THIS IS THE COVERSHEET, SEE ADDITIONAL PAGES FOR SPECIFIC AND GENERAL CONDITIONS
BUILDING CODE & PRODUCT REVIEW COMMITTEE

This application for Product Approval has been reviewed by the BCCO and approved by the Building Code and Product Review Committee to be used in Miami-Dade County, Florida under the conditions set forth above.

Francisco J. Quintana, R.A.
Director
Miami-Dade County
Building Code Compliance Office

APPROVED: 10/26/2000

Stanley Access Technologies

ACCEPTANCE No.: **00-0508.08**

APPROVED : OCT 2 6 2000

EXPIRES : OCT 2 6 2003

NOTICE OF ACCEPTANCE: SPECIFIC CONDITIONS

1. SCOPE

1.1 This approves an aluminum automatic sliding glass door, as described in Section 2 of this Notice of Acceptance, designed to comply with the South Florida Building Code (SFBC), 1994 Edition for Miami-Dade County, for the locations where the pressure requirements, as determined by SFBC Chapter 23, do not exceed the Design Pressure Rating values indicated in the approved drawings.

2. PRODUCT DESCRIPTION

2.1 The **Dura Glide Series 3000 Aluminum Automatic Sliding Glass Door w/ Steel reinforcement** - and its components shall be constructed in strict compliance with the following documents: Drawing No. **413837**, Sheets 1 through 4 of 4, prepared by manufacturer, dated 08/04/99 and last revised on 09-24-00, signed and sealed by William D. Cook, P.E., bearing the Miami-Dade County Product Control approval stamp with the Notice of Acceptance number and approval date by the Miami-Dade County Product Control Division. These documents shall hereinafter be referred to as the approved drawings.

3. LIMITATIONS

3.1 This approval applies to single unit applications only, as shown in approved drawings.

3.2 Unit shall be installed only at locations protected by a canopy or overhang such that the angle between the edge of canopy or overhang to sill is less than 45 degrees. Unless unit is installed in non-habitable areas where the unit and the area are designed to accept water infiltration.

4. INSTALLATION

4.1 The aluminum automatic sliding glass door and its components shall be installed in strict compliance with the approved drawings.

4.2 Hurricane protection system (shutters): the installation of this unit **will require** a hurricane protection system.

5. LABELING

5.1 Each unit shall bear a permanent label with the manufacturer's name or logo, city, state and following statement: "Miami-Dade County Product Control Approved".

6. BUILDING PERMIT REQUIREMENTS

6.1 Application for building permit shall be accompanied by copies of the following:

6.1.1 This Notice of Acceptance

6.1.2 Duplicate copies of the approved drawings, as identified in Section 2 of this Notice of Acceptance, clearly marked to show the components selected for the proposed installation.

6.1.3 Any other documents required by the Building Official or the South Florida Building Code (SFBC) in order to properly evaluate the installation of this system.

Ishaq I. Chanda

Ishaq I. Chanda, P. E., Product Control Examiner
Product Control Division

Stanley Access Technologies

ACCEPTANCE No.: 00-0508.08

APPROVED : OCT 2 6 2000

EXPIRES : OCT 2 6 2003

NOTICE OF ACCEPTANCE: STANDARD CONDITIONS

1. Renewal of this Acceptance (approval) shall be considered after a renewal application has been filed and the original submitted documentation, including test supporting data, engineering documents, are no older than eight (8) years.
2. Any and all approved products shall be permanently labeled with the manufacturer's name, city, state, and the following statement: "Miami-Dade County Product Control Approved", or as specifically stated in the specific conditions of this Acceptance.

3. Renewals of Acceptance will not be considered if:
   a) There has been a change in the South Florida Building Code affecting the evaluation of this product and the product is not in compliance with the code changes;
   b) The product is no longer the same product (identical) as the one originally approved;
   c) If the Acceptance holder has not complied with all the requirements of this acceptance, including the correct installation of the product;
   d) The engineer who originally prepared, signed and sealed the required documentation initially submitted is no longer practicing the engineering profession.

4. Any revision or change in the materials, use, and/or manufacture of the product or process shall automatically be cause for termination of this Acceptance, unless prior written approval has been requested (through the filing of a revision application with appropriate fee) and granted by this office.

5. Any of the following shall also be grounds for removal of this Acceptance:
   a) Unsatisfactory performance of this product or process.
   b) Misuse of this Acceptance as an endorsement of any product, for sales, advertising or any other purpose.

6. The Notice of Acceptance number preceded by the words Miami-Dade County, Florida, and followed by the expiration date may be displayed in advertising literature. If any portion of the Notice of Acceptance is displayed, then it shall be done in its entirety.
7. A copy of this Acceptance as well as approved drawings and other documents, where it applies, shall be provided to the user by the manufacturer or its distributors and shall be available for inspection at the job site at all time. The engineer need not reseal the copies.

8. Failure to comply with any section of this Acceptance shall be cause for termination and removal of Acceptance.

9. This Notice of Acceptance consists of pages 1, 2 and this last page 3.

Ishaq I. Chanda

Ishaq I. Chanda, P. E., Product Control Examiner
Product Control Division

END OF THIS ACCEPTANCE

DWG NO. 413837

ANCHOR TYPE

IN CONCRETE: ø1/4" PERMASEAL TAPPER CONCRETE SCREW EMBEDDED 1 1/2" MIN.
IN STEEL: 1/4-20 SMS SAE GRADE 2 OR BETTER (NOTE 3/16" STEEL MIN.)
IN WOOD: #14 WOOD SCREW EMBEDDED 1 1/2" MIN.
(NOTE: MINIMUM 2X4 WOODBUCK FOR WOOD SCREWS)

ANCHOR SPACING

SILL: STAGGERED DOUBLE ROW, 6" FROM EACH CORNER WITH REMAINDER SPACED AT 18" O.C.
HEAD: SINGLE ROW, 6" FROM EACH CORNER WITH REMAINDER SPACED AT 10" O.C.
JAMBS: SINGLE ROW, 2" FROM BOTTOM CORNER WITH REMAINDER SPACED AT 10" O.C.

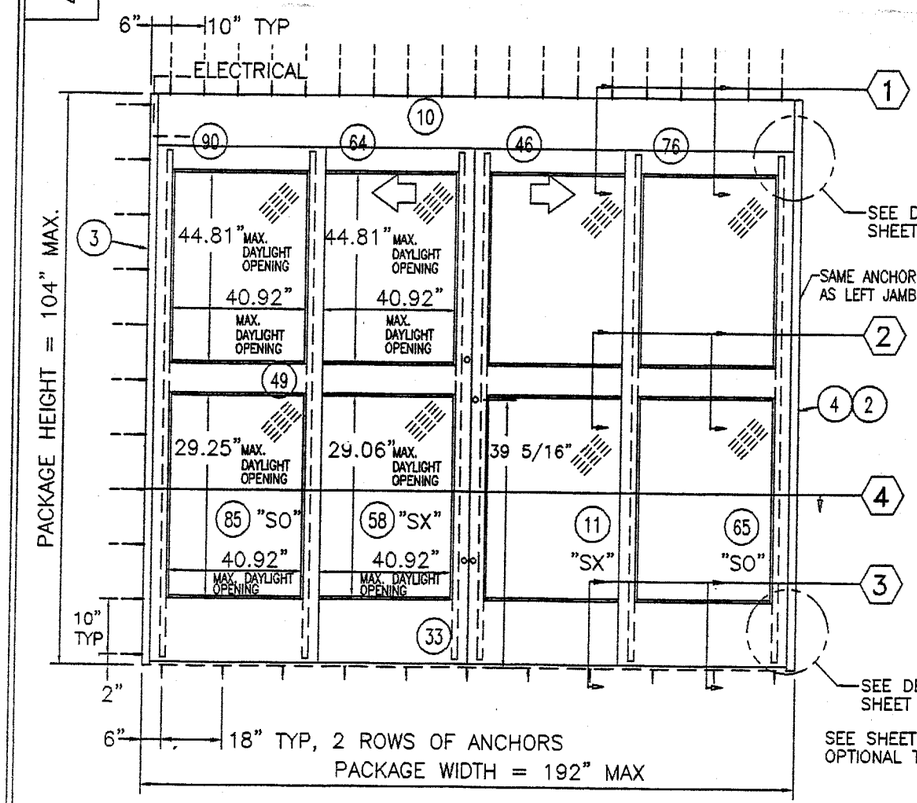

EXTERIOR ELEVATION (OXXO)

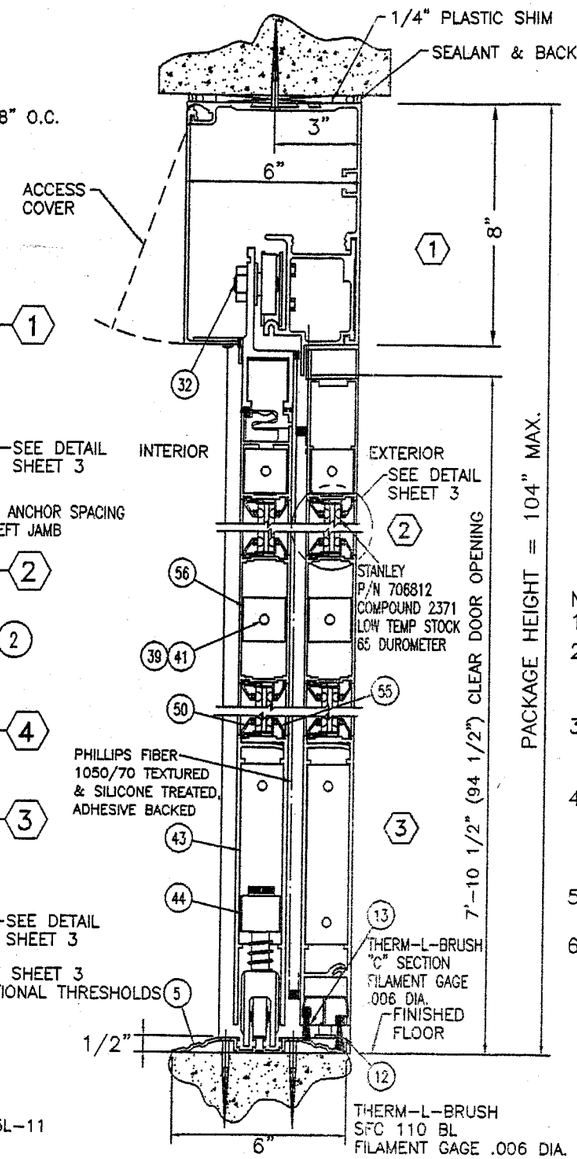

VERTICAL SECTION (1)(2)(3)

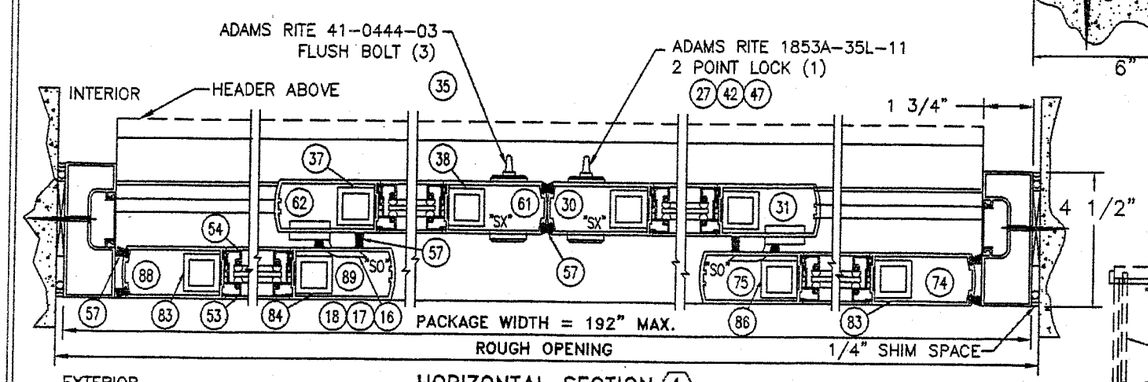

HORIZONTAL SECTION (4)

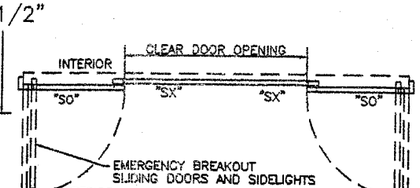

PLAN VIEW

REVISIONS

REV	ECN NO.	DATE	DESCRIPTION	DRAWN	APPROVED
A	00-32	3/30/00	INITIAL RELEASE	RWH	MJB
B	00-88	9-5-00	UPDATED TO CURRENT SPECS	RWH	GHN

A. L. BROMLEY P.E., INC.
STRUCTURAL ENGINEER
2004 N.E. 49th Street
Ft. Lauderdale, FL 33308
(954) 772-4624
9/12/00
William D. Cook, P.E.
43904
Structural Engineer

PACKAGE HEIGHT INFORMATION FOR SURFACE APPLICATIONS

PACKAGE HEIGHT	MASONRY OPENING	CAULKING ALLOWANCE	ACTUAL CLEAR OPG UNDER HEADER
8'-8" (104")	8'-8 1/4" (104 1/4")	1/4"	7'-10 1/2" (94 1/2")

PACKAGE WIDTH INFORMATION

PKG WIDTH	SLIDING DOOR OPENING	(SX) DOOR WIDTH	(SO) DOOR WIDTH	DOOR TRAVEL	MASONRY OPENING	CAULKING ALLOWANCE
16'-0" (192")	80"	49 1/8"	49 1/8"	40"	16'-1/2" (192 1/2")	1/4" / SIDE

NOTES:
1) ALL ALUMINUM PARTS ARE 6063-T5 ALUMINUM
2) GLAZING: 1/4" TEMPERED GLASS OR .575" GLASSLAM SAFETY PLUS BY NEBULA INTERNATIONAL, INC. (PER CURRENT APPROVED NOA) (SYSTEM TESTED AS NON-IMPACT RESISTANT) SEE SHEET 3 FOR DETAILS
3) CORNER PANEL CONSTRUCTION: PANEL CORNERS ARE BUTT JOINTED, SECURED WITH (4) FULL WIDTH 5/16" THREADED TIE RODS AT TOP RAIL, INTERMEDIATE HORIZONTAL MUNTIN BAR AND BOTTOM RAIL. ALL JOINTS ARE ALSO WELDED.
4) THE GLAZING MATERIAL IN BOTH FIXED AND SLIDING PANELS OF ALL SLIDING DOORS SHALL COMPLY WITH THE REQUIREMENTS IN THE PERFORMANCE SPECIFICATIONS AND METHODS OF TEST FOR SAFETY GLAZING MATERIALS USED IN BUILDINGS.
5) MIAMI-DADE COUNTY APPROVED SHUTTERS ARE REQUIRED FOR INSTALLATION OF THESE UNITS.
6) REFERENCE TEST REPORT FTL #2523

DESIGN PRESSURE RATING

	WHERE WATER INFILTRATION REQUIREMENT IS NEEDED.	WHERE WATER INFILTRATION REQUIREMENT IS NOT NEEDED.
POSITIVE	NOT APPROVED	+ 50 PSF
NEGATIVE	NOT APPROVED	- 50 PSF

APPROVED AS COMPLYING WITH THE SOUTH FLORIDA BUILDING CODE
DATE October 26, 2000
BY Ishaq I. Chanda
PRODUCT CONTROL DIVISION
BUILDING CODE COMPLIANCE OFFICE
ACCEPTANCE NO. 00-0508.02

DRAWN: R. HABERERN 8/4/99
CHECKED: MJB
APPROVED: MJB
MATERIAL: N/A
FINISH: N/A

STANLEY ACCESS TECHNOLOGIES
A DIVISION OF THE STANLEY WORKS
65 SCOTT SWAMP ROAD, FARMINGTON, CT, 06032

TITLE ANCHORING FOR DURA-GLIDE 3000 BIPART, REINFORCED

PRODUCT LINE DURA-GLIDE

SIZE B | DWG NO. 413837 | REV B

SCALE NONE | SHEET 1 OF 4

DWG NO. 413837

DWG NO. 413837

ANCHOR TYPE
IN CONCRETE: ø1/4" PERMASEAL TAPPER CONCRETE SCREW EMBEDDED 1 1/2" MIN.
IN STEEL: 1/4-20 SMS SAE GRADE 2 OR BETTER (NOTE 3/16" STEEL MIN.)
IN WOOD: #14 WOOD SCREW EMBEDDED 1 1/2" MIN.
(NOTE: MINIMUM 2X4 WOODBUCK FOR WOOD SCREWS)

ANCHOR SPACING
SILL: STAGGERED ROW, 3" FROM EACH CORNER WITH REMAINDER SPACED AT 17" O.C.
HEAD: SINGLE ROW, 4" FROM EACH CORNER WITH REMAINDER SPACED AT 10" O.C.
JAMBS: SINGLE ROW, 2" FROM BOTTOM CORNER WITH REMAINDER SPACED AT 10" O.C.

A. L. BROMLEY P.E., INC.
STRUCTURAL ENGINEER
2004 N.E. 49th Street
Ft. Lauderdale, FL 33308
(954) 772-4624

9/12/00

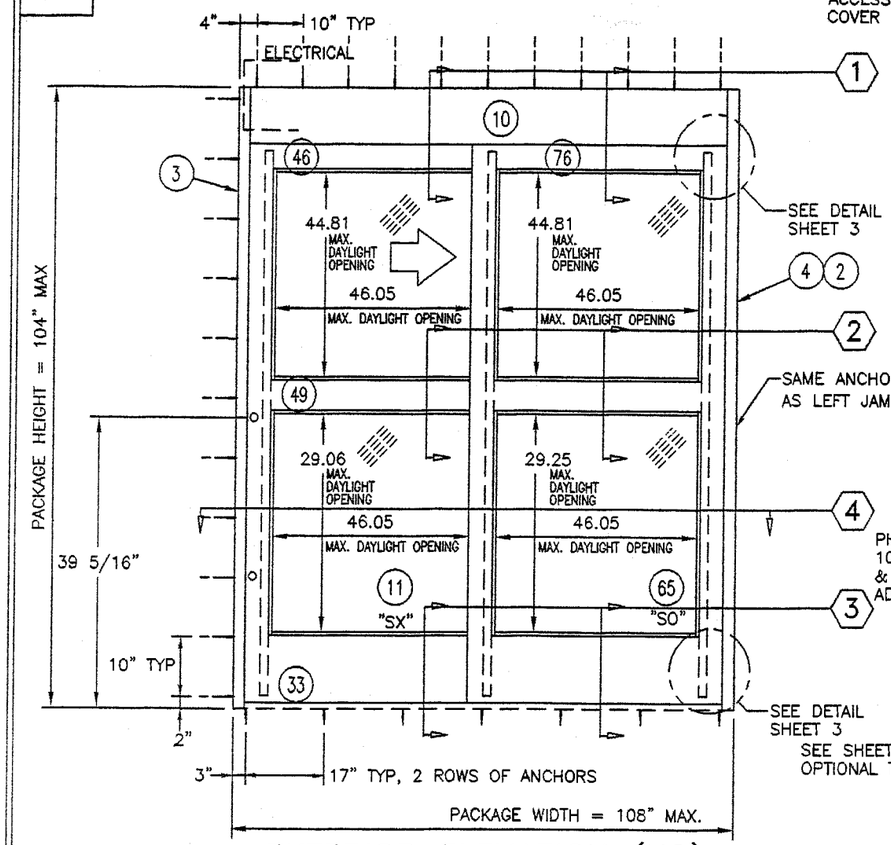

EXTERIOR ELEVATION (XO)

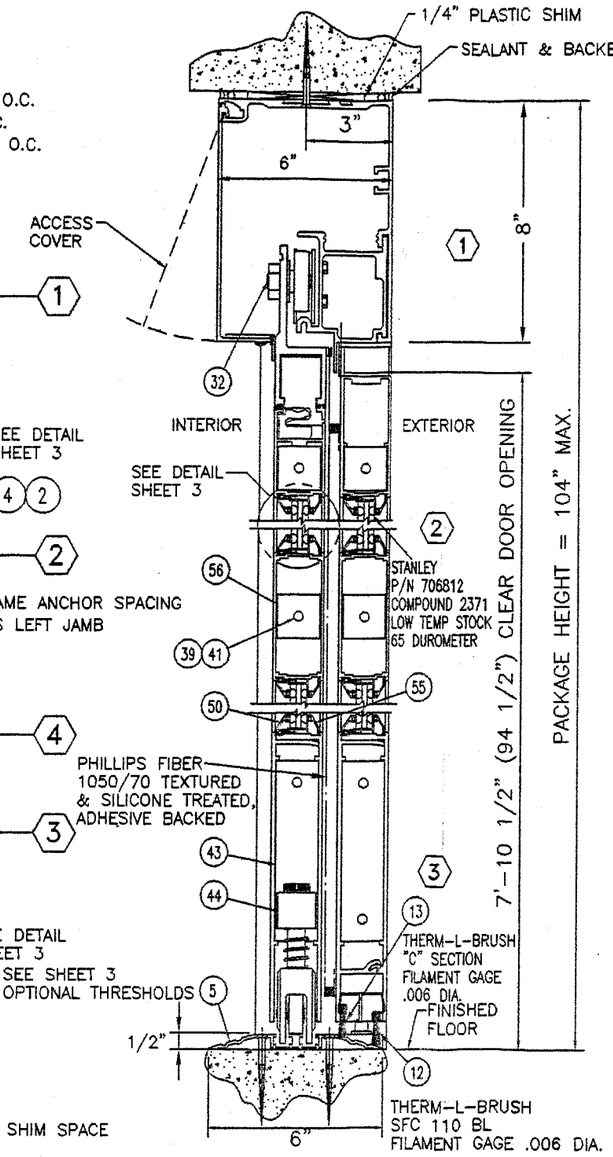

VERTICAL SECTION

PACKAGE HEIGHT INFORMATION FOR SURFACE APPLICATIONS

PACKAGE HEIGHT	MASONRY OPENING	CAULKING ALLOWANCE	ACTUAL CLEAR OPG UNDER HEADER
8'-8" (104")	8'-8 1/4" (104 1/4")	1/4"	7'-10 1/2" (94 1/2")

PACKAGE WIDTH INFORMATION

PKG WIDTH	SLIDING DOOR OPENING	(SX) DOOR WIDTH	(SO) DOOR WIDTH	DOOR TRAVEL	MASONRY OPENING	CAULKING ALLOWANCE
9'-0" (108")	45 1/4"	54 1/4"	54 1/4"	45 1/4"	9'-1/2" (108 1/2")	1/4" / SIDE

NOTES:
1) ALL ALUMINUM PARTS ARE 6063-T5 ALUMINUM
2) GLAZING: 1/4" TEMPERED GLASS OR .575" GLASSLAM SAFETY PLUS BY NEBULA INTERNATIONAL, INC. (PER CURRENT APPROVED NOA) (SYSTEM TESTED AS NON-IMPACT RESISTANT) SEE SHEET 3 FOR DETAILS
3) CORNER PANEL CONSTRUCTION: PANEL CORNERS ARE BUTT JOINTED, SECURED WITH (4) FULL WIDTH 5/16" THREADED TIE RODS AT TOP RAIL, INTERMEDIATE HORIZONTAL MUNTIN BAR AND BOTTOM RAIL. ALL JOINTS ARE ALSO WELDED.
4) THE GLAZING MATERIAL IN BOTH FIXED AND SLIDING PANELS OF ALL SLIDING DOORS SHALL COMPLY WITH THE REQUIREMENTS IN THE PERFORMANCE SPECIFICATIONS AND METHODS OF TEST FOR SAFETY GLAZING MATERIALS USED IN BUILDINGS.
5) MIAMI-DADE COUNTY APPROVED SHUTTERS ARE REQUIRED FOR INSTALATION OF THESE UNITS.
6) REFERENCE TEST REPORT FTL #2523

DESIGN PRESSURE RATING		
	WHERE WATER INFILTRATION REQUIREMENT IS NEEDED.	WHERE WATER INFILTRATION REQUIREMENT IS NOT NEEDED.
POSITIVE	NOT APPROVED	+ 50 PSF
NEGATIVE	NOT APPROVED	- 50 PSF

APPROVED AS COMPLYING WITH THE SOUTH FLORIDA BUILDING CODE
DATE October 26, 2000
BY Ishaq I. Chanda
PRODUCT CONTROL DIVISION
BUILDING CODE COMPLIANCE OFFICE
ACCEPTANCE NO. 00-0508.08

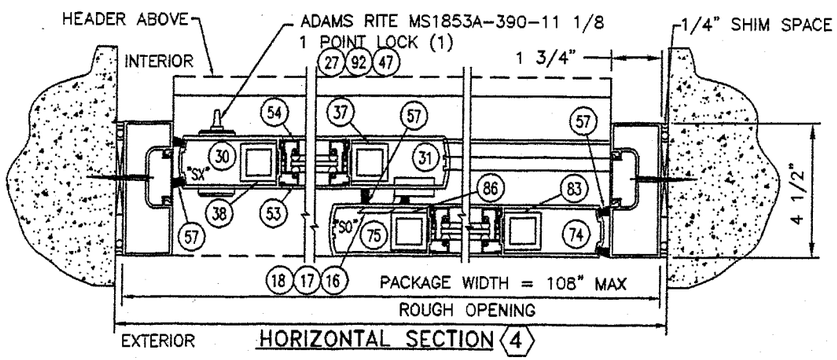

HORIZONTAL SECTION 4

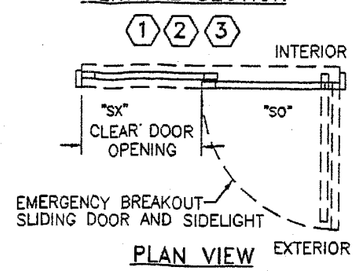

PLAN VIEW

DRAWN: R. HABERERN 8/16/99	STANLEY ACCESS TECHNOLOGIES A DIVISION OF THE STANLEY WORKS 65 SCOTT SWAMP ROAD, FARMINGTON, CT, 06032
CHECKED: MJB	
APPROVED: MJB	TITLE ANCHORING FOR D/G 3000 SINGLE SLIDE, REINFORCED
MATERIAL: N/A	PRODUCT LINE DURA-GLIDE
FINISH: N/A	SIZE B · DWG NO. 413837 · REV B
	SCALE NONE · SHEET 2 OF 4

DWG NO. 413837

DWG NO. 413837

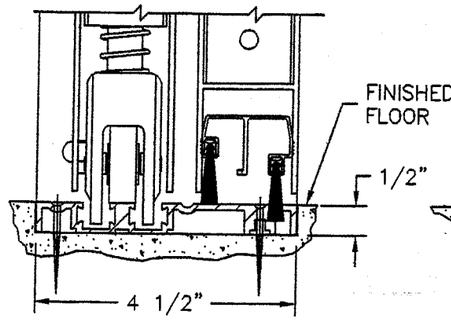

515262

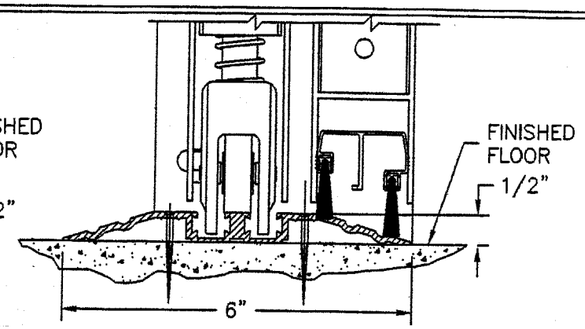

515260

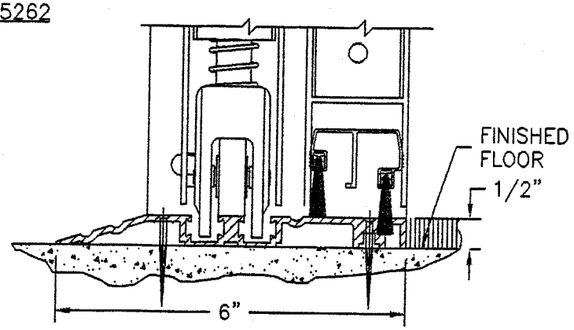

516339

(5) THRESHOLD OPTIONS

GLAZING DETAILS

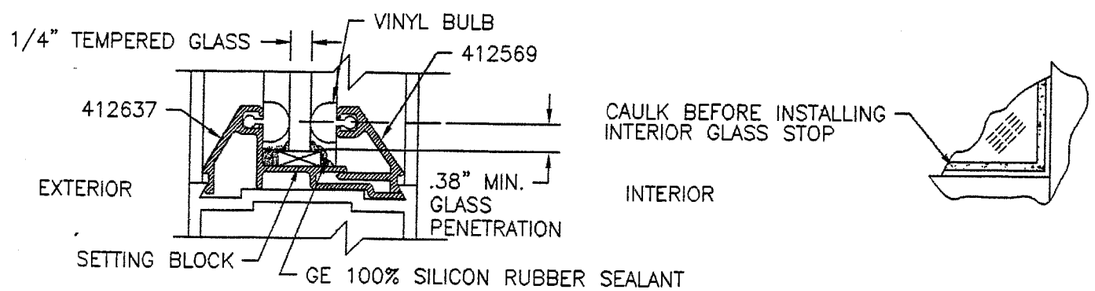

OPTION 1: 1/4" TEMPERED GLASS

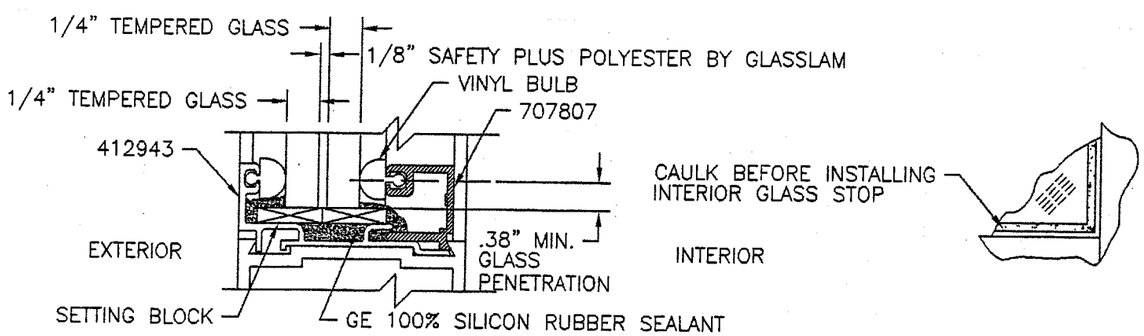

OPTION 2: GLASSLAM SAFETY PLUS BY NEBULA INTERNATIONAL, INC. (PER CURRENT APPROVED NOA)

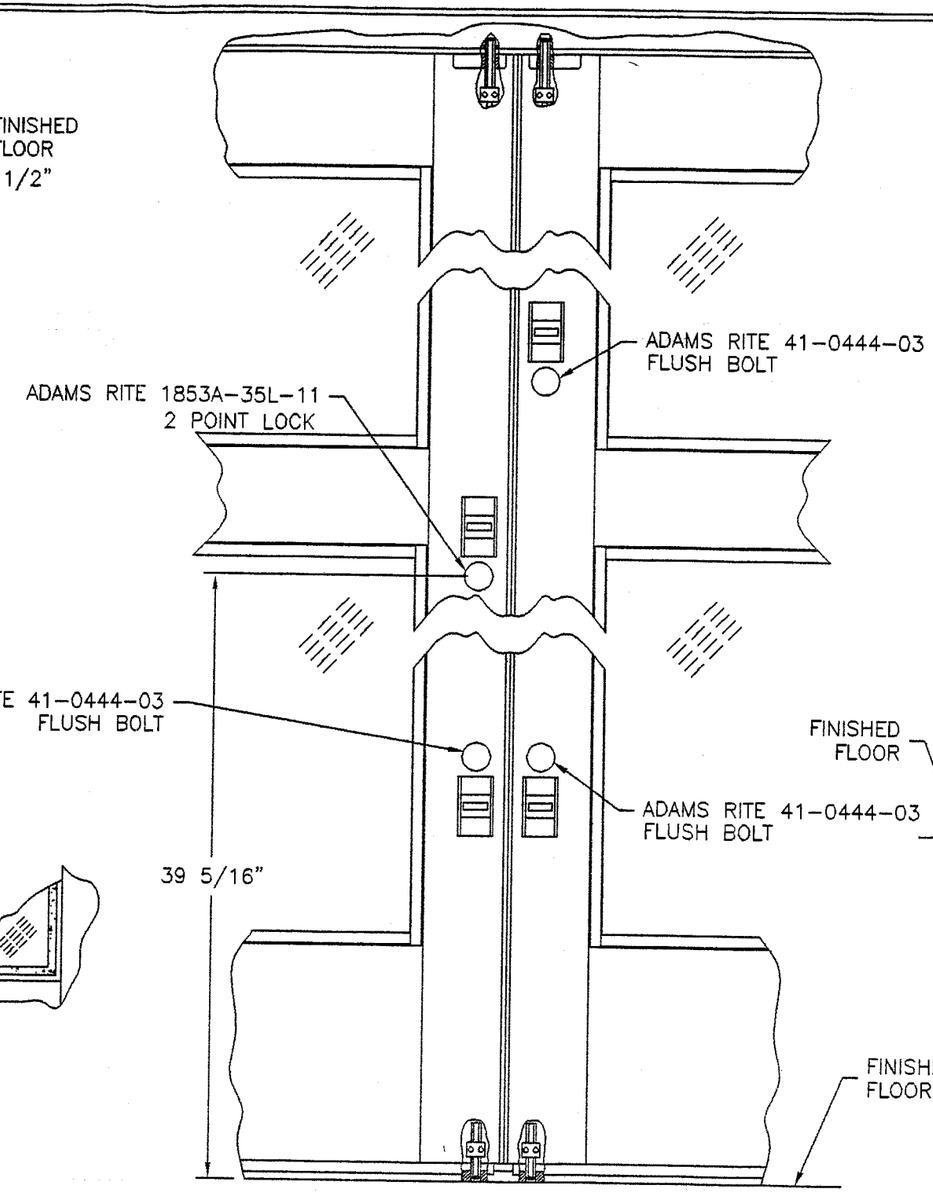

FLUSH BOLT DETAIL (VIEW FROM INTERIOR)

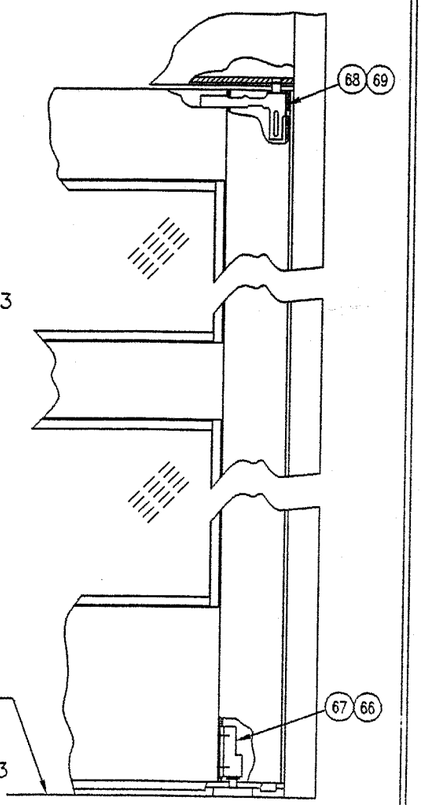

PIVOT DETAIL STATIONARY PANEL

APPROVED AS COMPLYING WITH THE SOUTH FLORIDA BUILDING CODE
DATE October 26, 2000
BY Ishaq I. Chanda
PRODUCT CONTROL DIVISION
BUILDING CODE COMPLIANCE OFFICE
ACCEPTANCE NO. 00-0508.08

A. L. BROMLEY P.E., INC.
STRUCTURAL ENGINEER
2004 N.E. 49th Street
Ft. Lauderdale, FL 33308
(954) 772-4624

9/18/10

DRAWN: R. HABERERN 8/16/99	STANLEY ACCESS TECHNOLOGIES A DIVISION OF THE STANLEY WORKS 65 SCOTT SWAMP ROAD, FARMINGTON, CT, 06032
CHECKED: MJB	TITLE THRESHOLD, GLAZING, FLUSH BOLT, PIVOT DETAILS, REINFORCED PACKAGES
APPROVED: MJB	PRODUCT LINE DURA-GLIDE, 3000
MATERIAL: N/A	SIZE B · DWG NO. 413837 · REV B
FINISH: N/A	SCALE NONE · SHEET 3 OF 4

DWG NO. 413837

DWG NO. 413837

ITEM	QTY	PART NO.	DESCRIPTION
1	1		DURA-GLIDE 3000 BI-PART
2	2	413089-1	JAMB INSERT
3	1	157541	JAMB ASSEMBLY, 4.500 X 1.750 X .100
4	1	157542	JAMB ASSEMBLY, 4.500 X 1.750 X .100
5	1	515260	THRESHOLD
	1	516339	THRESHOLD
	1	515262	THRESHOLD
10A	1	515686	HEADER COVER, 8.468 X 1.968 X .109
10B	1	110755	HEADER, 8.000 X 6.000 X .140
10C	1	515056	HEADERTRACK TUBE, 4.624 X 3.35 X .125
11	1	157508	DOOR PANEL, SX - RH
12	1	713241	THERM-L-BRUSH
13	1	710739	THERM-L-BRUSH
14	2	713416	FLUSH BOLT GUIDE
15	12	312063499	SCREW, FHM-PH 1/4-20 X 1/2 LG
16	2	713823	REINFORCEMENT, SECURITY HOOK, OUTSIDE
17	2	713822	REINFORCEMENT, SECURITY HOOK, INSIDE
18	2	713821	HOOK, SECURITY, MEDIUM STILE
19	1	380901499	NUT, HEX JAM, 5/16-18
20	1	353367000	SCREW, SHC-SK, 5/16-18 X 2.0 LG
21	1	412638	LABEL, CAUTION
22	2	413162	EXIT INDICATOR
23	1	412571	BLOCK-ANCHOR
24	1	413826	SPACER-PILLOW BLOCK
25	2	353349000	SCREW, SHM-SK, 1/4-20 X 1.0 LG
26	2	312073499	SCREW, FHM-PH, 1/4-20 X 2.0 LG
27	2	709221	LOCK, THUMBTURN
28	2	351801499	SCREW, SHC-SK, 1/4-20 X 3/8 LG
29	4	713321	SCREW, FHC-SK, #10-32 X 3/8 LG
30	1	157523	STILE, LOCK-SX, RH, 3.531 X 1.750 X .125
31	1	157517	STILE, PIVOT-SX, RH, 3.531 X 1.750 X .125
32	1	111879-2	HANGER ASSEMBLY-SX, RH
33A	1	516329	RAIL, BOTTOM-SX, 9.625 X 1.595 X .140
33B	1	516630	RAIL, BOTTOM-SX, 9.625 X 1.530 X .140
34	4	312008960	SCREW, FHM-PH, #8-32 X 5/8LG
35	1	413821	FLUSH BOLT, ADAMS RITE 41-0444-03
36	2	413811	ROD ASS'Y, THROWBOLT, ADAMS RITE 31-0278
37	6	516743	STEEL TUBE, ASTM A500, 1 1/4 X 1 1/4 X 3/16 X 90 7/8 LG
38	4	516741	STEEL TUBE, ASTM A500, 1 1/4 X 1 1/4 X 3/16 X 90 7/8 LG
39	4	711483	ROD, TIE, 5/16-18 UNC-1A, STEEL, FULL LENGTH OF RAIL
40	16	706812	SEAL, WEATHER-LENGTH AS REQUIRED
41	8	706233	NUT, FLANGED
42	1	413810	LOCK, 2 POINT ADAMS RITE 1853A-35L-11, A1-0464-03
43	2	516338	CLIP, GUIDE
44	1	515265	BOTTOM GUIDE ASSEMBLY
45	1	516224	DETENT-DOOR PORTION
46	1	516643-1	RAIL, TOP-SX, RH, 2.875 X 1.735 X .093
47	2	706668	LOCK, CYLINDER
48	1	413805	SWEEP HOLDER
49	1	413741	BAR, MUNTIN, 4.250 X 1.735 X .093
50	4	412911-3	STOP, GLASS-HORIZONTAL, .625 X .462 X .051
51	2	412909-10	STOP, GLASS-VERTICAL, .625 X .519 X .051
52	2	412908-7	STOP, GLASS-VERTICAL, 1.551 X .649 X .041
53	2	412908-6	STOP, GLASS-VERTICAL, 1.551 X .649 X .041
54	2	412909-9	STOP, GLASS-VERTICAL, .625 X .519 X .051
55	4	412910-3	STOP, GLASS-HORIZONTAL, 1.551 X .649 X .041
56	4	412479	CLIP, GUIDE
57	1	411624	PILE, ADHESIVE BACKED
58	1	157509	DOOR PANEL, SX - LH
			SAME AS 157508 EXCEPT AS NOTED
59	2	312251960	SCREW, FHM-PH, #10-32 X 1/2 LG
60	1	516552	STRIKE PLATE ASSEMBLY
61	1	157502	STILE, STRIKE-SX, LH, 3.531 X 1.750 X .125
62	1	157520	STILE, PIVOT-SX, LH, 3.531 X 1.750 X .125
63	1	111879-1	HANGER ASSEMBLY-SX, LH
64	1	516643-2	RAIL, TOP-SX, LH, 2.875 X 1.735 X .093
65	1	157510	DOOR PANEL, SO - RH
			SAME AS 157508 EXCEPT AS NOTED
66	2	312068499	SCREW, FHM-PH, 1/4-20 X 1.0LG
67	1	410100	BOTTOM PIVOT-RH
68	5	713844	PIVOT-SELF TAPPING SCREW
69	1	413829	PIVOT ASSEMBLY (UPPER)-SO
70	2	713838	WIRE CLIP
71	1	712175	LOGO, STANLEY
72	1	711463-A	BREAK OUT SWITCH (MAGNET)
73	4	312024960	SCREW, FHM-PH, #10-24 X 3/8 LG
74	1	157521-1	STILE, TRAILING, SO-RH, 3.531 X 1.750 X .125
75	1	157503	STILE, LEAD, SO-RH, 3.531 X 1.750 X .125
76	1	516693-1	RAIL, TOP, SO-RH, 5.000 X 1.735 X .093
77	2	708867	BALL DETENT ASSEMBLY
79	1	411709	DOOR HOLDER ASSEMBLY
80	2	312068499	SCREW, FHM-PH, 1/4-20 X 1.0 LG
81	2	713223	RIVNUT
82	1	413830	DAMPER ASSEMBLY
83	1	516744	STEEL TUBE, ASTM A500, 1 1/4 X 1 1/4 X 3/16 X 93 3/16 LG
84	1	516742	STEEL TUBE, ASTM A500, 1 1/4 X 1 1/4 X 3/16 X 93 3/16 LG
85	1	157511	DOOR PANEL, SO - LH
			SAME AS 157510 EXCEPT AS NOTED
86	1	516697	STEEL TUBE, ASTM A500, 1 1/4 X 1 1/4 X 3/16 X 93 3/16 LG
87	1	410101	BOTTOM PIVOT-LH
88	1	157521	STILE, TRAILING, SO-LH, 3.531 X 1.750 X .125
89	1	157504	STILE, LEAD, SO-LH, 3.530 X 1.750 X .125
90	1	516693-2	RAIL, TOP, SO-LH, 5.000 X 1.735 X .093
91	1		DURA-GLIDE 3000 SINGLE SLIDE
			SAME AS BI-PART EXCEPT AS NOTED
92	1	515193	LOCK, 2 POINT, ADAMS RITE 1853A-390
93	2	312004960	SCREW, FHM-PH, #8-32 X 3/8 LG

NOTE: ALL EXTRUSIONS ARE MADE FROM 6063-T6 ALUMINUM

A. L. BROMLEY P.E., INC.
STRUCTURAL ENGINEER
2004 N.E. 49th Street
Ft. Lauderdale, FL 33308
(954) 772-4624

8/18/99

DRAWN: R. HABERERN 8/16/99
CHECKED: MJB
APPROVED: MJB
MATERIAL: N/A
FINISH: N/A

STANLEY ACCESS TECHNOLOGIES
A DIVISION OF THE STANLEY WORKS
65 SCOTT SWAMP ROAD, FARMINGTON, CT. 06032

TITLE: BILL OF MATERIALS, REINFORCED PACKAGES
PRODUCT LINE: DURA-GLIDE, 3000
SIZE: B
DWG NO.: 413837
REV: C
SCALE: 1:1
SHEET 4 OF 4

DWG NO. 413837

APPROVED AS COMPLYING WITH THE SOUTH FLORIDA BUILDING CODE
DATE: October 26, 2000
BY: Isling I. Chauch
PRODUCT CONTROL DIVISION
BUILDING CODE COMPLIANCE OFFICE
ACCEPTANCE NO. 00-0508.08