MIAMI-DADE COUNTY, FLORIDA
METRO-DADE FLAGLER BUILDING

**BUILDING CODE COMPLIANCE OFFICE**
METRO-DADE FLAGLER BUILDING
140 WEST FLAGLER STREET, SUITE 1603
MIAMI, FLORIDA 33130-1563
(305) 375-2901 FAX (305) 375-2908

**CONTRACTOR LICENSING SECTION**
(305) 375-2527 FAX (305) 375-2558

**CONTRACTOR ENFORCEMENT DIVISION**
(305) 375-2966 FAX (305) 375-2908

**PRODUCT CONTROL DIVISION**
(305) 375-2902 FAX (305) 372-6339

# PRODUCT CONTROL NOTICE OF ACCEPTANCE

**Sunshine Windows Manufacturing, Inc.**
**1745 W. 33 rd Place**
**Hialeah ,FL 33012**

Your application for Notice of Acceptance (NOA) of:
**Series 4230 Aluminum Fixed Window**
under Chapter 8 of the Code of Miami-Dade County governing the use of Alternate Materials and Types of Construction, and completely described herein, has been recommended for acceptance by the Miami-Dade County Building Code Compliance Office (BCCO) under the conditions specified herein.

This NOA shall not be valid after the expiration date stated below. BCCO reserves the right to secure this product or material at any time from a jobsite or manufacturer's plant for quality control testing. If this product or material fails to perform in the approved manner, BCCO may revoke, modify, or suspend the use of such product or material immediately. BCCO reserves the right to revoke this approval, if it is determined by BCCO that this product or material fails to meet the requirements of the South Florida Building Code.

The expense of such testing will be incurred by the manufacturer.

**ACCEPTANCE NO.: 00-0512.04**
**EXPIRES: 09/16/2003**

Raul Rodriguez
Chief Product Control Division

**THIS IS THE COVERSHEET, SEE ADDITIONAL PAGES FOR SPECIFIC AND GENERAL CONDITIONS**
**BUILDING CODE & PRODUCT REVIEW COMMITTEE**

This application for Product Approval has been reviewed by the BCCO and approved by the Building Code and Product Review Committee to be used in Miami-Dade County, Florida under the conditions set forth above.

Francisco J. Quintana, R.A.
Director
Miami-Dade County
Building Code Compliance Office

**APPROVED: 10/12/2000**

**Sunshine Windows Manufacturing, Inc.**

**ACCEPTANCE No. :** **00-0512.04**

**APPROVED** : OCT 1 2 2000

**EXPIRES** : **September 16, 2003**

## NOTICE OF ACCEPTANCE: SPECIFIC CONDITIONS

**1. SCOPE**

**1.1** This **revises and renews** the notice of Acceptance No. 96-1008.04, which was issued on September 16, 1997. It approves an aluminum fixed window, as described in Section 2 of this Notice of Acceptance, designed to comply with the South Florida Building Code, 1994 Edition for Miami-Dade County, for the locations where the pressure requirements, as determined by SFBC Chapter 23, do not exceed the Design Pressure Rating values indicated in the approved drawings.

**2. PRODUCT DESCRIPTION**

**2.1** The **Series 4230 Aluminum Fixed Window** and its components shall be constructed in strict compliance with the following documents: Drawing No. **PW-00-01**, titled "Series 4230 Aluminum Fixed Window," dated 8-24-00, Sheet 1 thru 3 of 3, signed and sealed by Francisco Hernandez, P.E., bearing the Miami-Dade County Product Control Approval stamp with the Notice of Acceptance number and approval date by the Miami-Dade County Product Control Division. These documents shall hereinafter be referred to as the approved drawings.

**3. LIMITATIONS**

**3.1** This approval applies to single unit applications only, as shown in approved drawings.

**3.2** For Design Pressure Rating vs. Window Size, see Comparative Analysis Tables in approved drawings.

**4. INSTALLATION**

**4.1** The aluminum fixed picture window and its components shall be installed in strict compliance with the approved drawings.

**4.2** Hurricane protection system (shutters): the installation of this unit **will require** a hurricane protection system.

**5. LABELING**

**5.1** Each window unit shall bear a permanent label with the manufacturer's name or logo, city, state and following statement: "Miami-Dade County Product Control Approved".

**6. BUILDING PERMIT REQUIREMENTS**

**6.1** Application for building permit shall be accompanied by copies of the following:

**6.1.1** This Notice of Acceptance.

**6.1.2** Duplicate copies of the approved drawings, as identified in Section 2 of this Notice of Acceptance, clearly marked to show the components selected for the proposed installation.

**6.1.3** Any other documents required by the Building Official or the South Florida Building Code (SFBC) in order to properly evaluate the installation of this system.

Manuel Perez, P.E., Product Control Examiner
Product Control Division

**Sunshine Windows Manufacturing, Inc.**

**ACCEPTANCE No. : 00-0512.04**

**APPROVED : OCT 1 2 2000**

**EXPIRES : September 16, 2003**

## NOTICE OF ACCEPTANCE: STANDARD CONDITIONS

1 Renewal of this Acceptance (approval) shall be considered after a renewal application has been filed and the original submitted documents, including test-supporting data, engineering documents, are no older than eight (8) years.

2. All approved products shall be permanently labeled with the manufacturer's name, city, state, and the following statement: "Miami-Dade County Product Control Approval", or as specifically stated in the specific conditions of this Acceptance.

3. Renewals of Acceptance will not be considered if:
   a. There has been a change in the South Florida Building Code affecting the evaluation of this product and the product is not in compliance with the code changes.
   b. The product is no longer the same product (identical) as the one originally approved.
   c. If the Acceptance holder has not complied with all the requirements of this acceptance, including the correct installation of the product.
   d. The engineer who originally prepared, signed and sealed the required documentation initially submitted, is no longer practicing the engineering profession.

4. Any revision or change in the materials, use, and/or manufacture of the product or process shall automatically be cause for termination of this Acceptance, unless prior written approval has been requested (through the filing of a revision application with appropriate fee) and granted by this office.

5. Any of the following shall also be grounds for removal of this Acceptance:
   a. Unsatisfactory performance of this product or process,
   b. Misuse of this Acceptance as an endorsement of any product, for sales, advertising or any other purposes.

6. The Notice of Acceptance number preceded by the words Miami-Dade County, Florida, and followed by the expiration date may be displayed in advertising literature. If any portion of the Notice of Acceptance is displayed, then it shall be done in its entirety.

7. A copy of this Acceptance as well as approved drawings and other documents, where it applies, shall be provided to the user by the manufacturer or its distributors and shall be available for inspection at the job site at all time. The engineer need not reseal the copies.

8. Failure to comply with any section of this Acceptance shall be cause for termination and removal of Acceptance.

9. This Notice of Acceptance consists of pages 1, 2 and this last page 3.

**END OF THIS ACCEPTANCE**

Manuel Perez

Manuel Perez, P.E., Product Control Examiner
Product Control Division

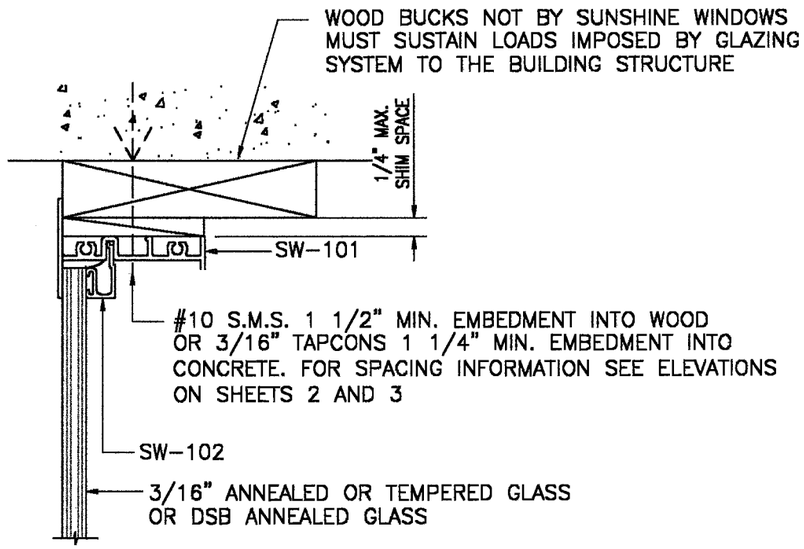


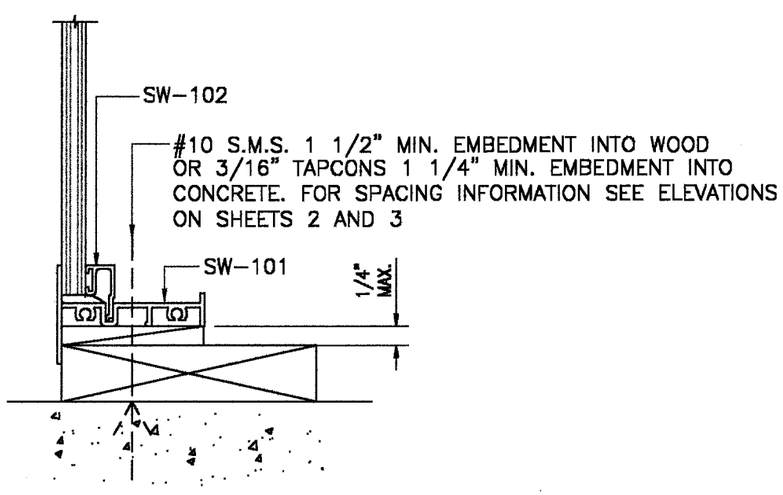


## SECTION A - A

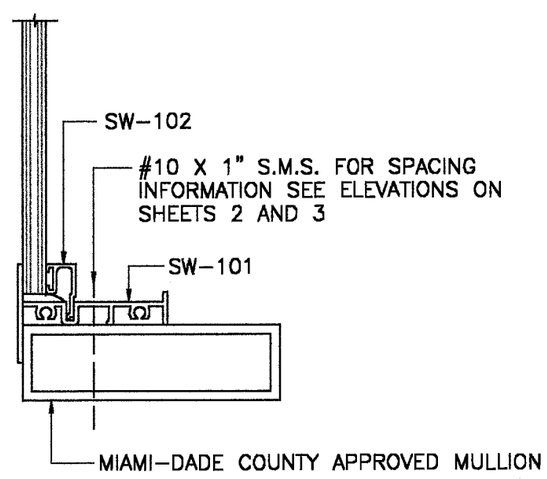


## COMPARATIVE ANALYSIS TABLES ON SHEETS 2 AND 3 BASED ON THE FOLLOWING TESTS:

1.) FTL-1419 OF 04-02-96
TEST SIZE= 46" X 108 1/8"
TEST LOADS= +135.0 -135.0 PSF
DESIGN LOADS= +90.0 -90.0 PSF
WATER INFILTRATION TEST= 15 PSF
TESTED GLASS= 3/16" TEMPERED

2.) FTL-1420 OF 04-02-96
TEST SIZE= 37" X 74"
TEST LOADS= +60.0 -60.0 PSF
DESIGN LOADS= +40.0 -40.0 PSF
WATER INFILTRATION TEST= 12 PSF
TESTED GLASS= 3/16" ANNEALED

3.) FTL-1421 OF 04-02-96
TEST SIZE= 26 1/2" X 53 1/4"
TEST LOADS= +67.5 -67.5 PSF
DESIGN LOADS= +45.0 -45.0 PSF
WATER INFILTRATION TEST= 12 PSF
TESTED GLASS= DSB ANNEALED

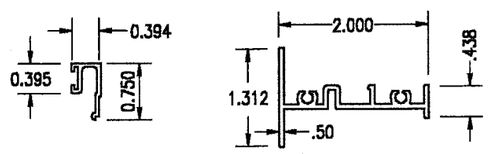


PART No. SW-102
**GLAZING BEAD**
6063-T6

PART No. SW-101
**FRAME**
6063-T6

APPROVED AS COMPLYING WITH THE SOUTH FLORIDA BUILDING CODE
DATE October 12, 2000
BY Manuel Perez
PRODUCT CONTROL DIVISION
BUILDING CODE COMPLIANCE OFFICE
ACCEPTANCE NO. 00-0512.04

8-24-00
FRANCISCO HERNANDEZ
FLORIDA PE # 51393

Sunshine Windows Manufacturing, Inc.
1745 W. 33rd Place
Hialeah, Florida 33012
Ph: (305)364-9952
Fax:(305)828-5118

FRANCISCO HERNANDEZ P. E.
Structural Engineering
351 NW 82nd AVE #1118
Miami, Florida 33126
Phone (305) 264 7919
Fax (305) 266 3427

**SERIES 4230 ALUMINUM FIXED WINDOW**

Drawn By: MH
Date: 8-24-00
Scale: 1/2"=1"
Revision:
Revision:

DRAWING No: PW-00-01

SHEET 1 OF 3

| WINDOW SIZE L X S INCHES | DESIGN PRESSURE CHART - PSF | | | | | |
|---|---|---|---|---|---|---|
| | 3/16" TEMPERED GLASS | | 3/16" ANNEALED GLASS | | DSB ANNEALED GLASS | |
| | POS. | NEG. | POS. | NEG. | POS. | NEG. |
| 120 X 40 | 96.94 | 96.94 | – | – | – | – |
| 120 X 37 | 100.00 | 104.15 | – | – | – | – |
| 120 X 26 | 100.00 | 140.59 | – | – | – | – |
| 120 X 19 | 100.00 | 186.29 | 55.55 | 55.55 | – | – |
| 108 X 46 | 90.00 | 90.00 | – | – | – | – |
| 108 X 40 | 100.00 | 100.00 | – | – | – | – |
| 108 X 37 | 100.00 | 106.30 | – | – | – | – |
| 108 X 26 | 100.00 | 142.51 | – | – | – | – |
| 108 X 19 | 100.00 | 188.09 | 61.89 | 61.89 | – | – |
| 96 X 50 | 82.80 | 82.80 | – | – | – | – |
| 96 X 46 | 90.00 | 90.00 | – | – | – | – |
| 96 X 40 | 100.00 | 102.93 | – | – | – | – |
| 96 X 37 | 100.00 | 109.12 | – | – | – | – |
| 96 X 26 | 100.00 | 144.99 | 48.82 | 48.82 | – | – |
| 96 X 19 | 100.00 | 190.39 | 64.84 | 64.84 | – | – |
| 91 X 54 | 76.67 | 76.67 | – | – | – | – |
| 91 X 50 | 82.80 | 82.80 | – | – | – | – |
| 91 X 46 | 90.00 | 90.00 | – | – | – | – |
| 91 X 40 | 100.00 | 103.50 | – | – | – | – |
| 91 X 37 | 100.00 | 110.57 | – | – | – | – |
| 91 X 26 | 100.00 | 146.25 | 49.81 | 49.81 | – | – |
| 91 X 19 | 100.00 | 191.54 | 65.23 | 65.23 | – | – |
| 84 X 58 | 71.38 | 71.38 | – | – | – | – |
| 84 X 54 | 76.67 | 76.67 | – | – | – | – |
| 84 X 50 | 82.80 | 82.80 | – | – | – | – |
| 84 X 46 | 90.00 | 90.00 | – | – | – | – |
| 84 X 40 | 100.00 | 103.50 | – | – | – | – |
| 84 X 37 | 100.00 | 111.89 | – | – | – | – |
| 84 X 26 | 100.00 | 148.31 | 50.51 | 50.51 | – | – |
| 84 X 19 | 100.00 | 193.42 | 65.87 | 65.87 | – | – |
| 78 X 63 | 65.71 | 65.71 | – | – | – | – |
| 78 X 58 | 71.38 | 71.38 | – | – | – | – |
| 78 X 54 | 76.67 | 76.67 | – | – | – | – |
| 78 X 50 | 82.80 | 82.80 | – | – | – | – |
| 78 X 46 | 90.00 | 90.00 | – | – | – | – |
| 78 X 40 | 100.00 | 103.50 | – | – | – | – |
| 78 X 37 | 100.00 | 111.89 | – | – | – | – |
| 78 X 26 | 100.00 | 150.43 | 51.23 | 51.23 | – | – |
| 78 X 19 | 100.00 | 195.34 | 66.52 | 66.52 | – | – |

| WINDOW SIZE L X S INCHES | DESIGN PRESSURE CHART - PSF | | | | | |
|---|---|---|---|---|---|---|
| | 3/16" TEMPERED GLASS | | 3/16" ANNEALED GLASS | | DSB ANNEALED GLASS | |
| | POS. | NEG. | POS. | NEG. | POS. | NEG. |
| 74 X 66 | 62.73 | 62.73 | – | – | – | – |
| 74 X 63 | 65.71 | 65.71 | – | – | – | – |
| 74 X 58 | 71.38 | 71.38 | – | – | – | – |
| 74 X 54 | 76.67 | 76.67 | – | – | – | – |
| 74 X 50 | 82.80 | 82.80 | – | – | – | – |
| 74 X 46 | 90.00 | 90.00 | – | – | – | – |
| 74 X 40 | 100.00 | 103.50 | – | – | – | – |
| 74 X 37 | 100.00 | 111.89 | – | – | – | – |
| 74 X 26 | 100.00 | 152.08 | 51.79 | 51.79 | – | – |
| 74 X 19 | 100.00 | 196.81 | 67.03 | 67.03 | 50.38 | 50.38 |
| 63 X 58 | 71.38 | 71.38 | – | – | – | – |
| 63 X 54 | 76.67 | 76.67 | – | – | – | – |
| 63 X 50 | 82.80 | 82.80 | – | – | – | – |
| 63 X 46 | 90.00 | 90.00 | – | – | – | – |
| 63 X 40 | 100.00 | 103.50 | 37.00 | 37.00 | – | – |
| 63 X 37 | 100.00 | 111.89 | 40.00 | 40.00 | – | – |
| 63 X 26 | 100.00 | 157.95 | 53.79 | 53.79 | – | – |
| 63 X 19 | 100.00 | 202.01 | 68.79 | 68.79 | 55.52 | 55.52 |
| 53 X 50 | 82.80 | 82.80 | 29.60 | 29.60 | – | – |
| 53 X 46 | 90.00 | 90.00 | 32.17 | 32.17 | – | – |
| 53 X 40 | 100.00 | 103.50 | 37.00 | 37.00 | – | – |
| 53 X 37 | 100.00 | 111.89 | 40.00 | 40.00 | – | – |
| 53 X 26 | 100.00 | 159.23 | 56.57 | 56.57 | 45.65 | 45.65 |
| 53 X 19 | 100.00 | 209.01 | 71.18 | 71.18 | 57.44 | 57.44 |
| 46 X 40 | 100.00 | 103.50 | 37.00 | 37.00 | – | – |
| 46 X 37 | 100.00 | 111.89 | 40.00 | 40.00 | – | – |
| 46 X 26 | 100.00 | 159.23 | 56.92 | 56.92 | 45.87 | 45.87 |
| 46 X 19 | 100.00 | 216.19 | 73.63 | 73.63 | 59.42 | 59.42 |
| 38 X 37 | 100.00 | 111.89 | 40.00 | 40.00 | 32.23 | 32.23 |
| 38 X 26 | 100.00 | 159.23 | 56.92 | 56.92 | 45.87 | 45.87 |
| 38 X 19 | 100.00 | 217.89 | 77.89 | 77.89 | 62.76 | 62.76 |
| 26 X 26 | 100.00 | 159.23 | 56.92 | 56.92 | 45.87 | 45.87 |
| 26 X 19 | 100.00 | 217.89 | 77.89 | 77.89 | 62.76 | 62.76 |

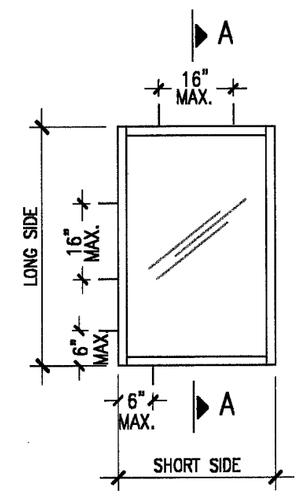


## RECTANGLE
## TYPICAL ELEVATION

APPROVED AS COMPLYING WITH THE
SOUTH FLORIDA BUILDING CODE
DATE October 12, 2000
BY Manuel Perez
PRODUCT CONTROL DIVISION
BUILDING CODE COMPLIANCE OFFICE
ACCEPTANCE NO. 00-0512.04

8-24-00
FRANCISCO HERNANDEZ
FLORIDA PE # 51393


Sunshine Windows Manufacturing, Inc.
1745 W. 33rd Place
Hialeah, Florida 33012
Ph: (305)364-9952
Fax:(305)828-5118

FRANCISCO HERNANDEZ P. E.
Structural Engineering
351 NW 82nd AVE #1118
Miami, Florida 33126
Phone (305) 264 7919
Fax (305) 266 3427


**SERIES 4230 ALUMINUM FIXED WINDOW**

Drawn By: MH
Date: 8-24-00
Scale: 3/8"=1'
Revision:
Revision:

DRAWING NO.
PW-00-01

SHEET 2 OF 3

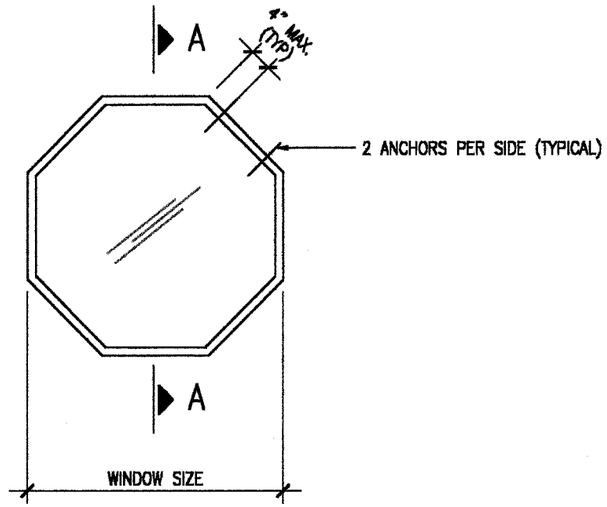


## OCTAGON
## TYPICAL ELEVATION

| WINDOW SIZE INCHES | DESIGN PRESSURE CHART - PSF | | | | | |
|---|---|---|---|---|---|---|
| | 3/16" TEMPERED GLASS | | 3/16" ANNEALED GLASS | | DSB ANNEALED GLASS | |
| | POS. | NEG. | POS. | NEG. | POS. | NEG. |
| 48 | 100.00 | 208.23 | 55.45 | 55.45 | 30.56 | 30.56 |
| 42 | 100.00 | 237.97 | 72.43 | 72.43 | 39.91 | 39.91 |
| 36 | 100.00 | 270.00 | 80.00 | 98.58 | 54.33 | 54.33 |
| 30 | 100.00 | 270.00 | 80.00 | 119.10 | 78.23 | 78.23 |
| 24 | 100.00 | 270.00 | 80.00 | 148.88 | 80.00 | 122.23 |

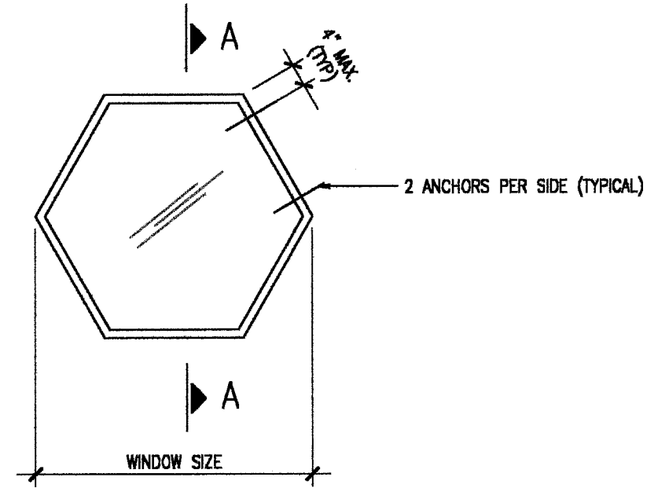


## HEXAGON
## TYPICAL ELEVATION

| WINDOW SIZE INCHES | DESIGN PRESSURE CHART - PSF | | | | | |
|---|---|---|---|---|---|---|
| | 3/16" TEMPERED GLASS | | 3/16" ANNEALED GLASS | | DSB ANNEALED GLASS | |
| | POS. | NEG. | POS. | NEG. | POS. | NEG. |
| 48 | 100.00 | 149.39 | 53.05 | 53.05 | 29.23 | 29.23 |
| 42 | 100.00 | 170.73 | 61.03 | 61.03 | 38.18 | 38.18 |
| 36 | 100.00 | 199.19 | 71.21 | 71.21 | 51.97 | 51.97 |
| 30 | 100.00 | 239.02 | 80.00 | 85.45 | 74.83 | 74.83 |
| 24 | 100.00 | 270.00 | 80.00 | 106.81 | 80.00 | 116.93 |

APPROVED AS COMPLYING WITH THE SOUTH FLORIDA BUILDING CODE
DATE October 12, 2000
BY Manuel Suarez
PRODUCT CONTROL DIVISION
BUILDING CODE COMPLIANCE OFFICE
ACCEPTANCE NO. 00-0512.04

8-24-00
FRANCISCO HERNANDEZ
FLORIDA PE # 51393


Sunshine Windows Manufacturing, Inc.
1745 W. 33rd Place
Hialeah, Florida 33012
Ph: (305)364-9952
Fax:(305)828-5118

FRANCISCO HERNANDEZ P. E.
Structural Engineering
351 NW 82nd AVE #1118
Miami, Florida 33126
Phone (305) 264 7919
Fax (305) 266 3427


# SERIES 4230 ALUMINUM FIXED WINDOW

Drawn By: MH
Date: 8-24-00
Scale: 1/2"=1'
Revision:
Revision:

DRAWING NO.
PW-00-01

SHEET
3 OF 3