MIAMI-DADE

MIAMI-DADE COUNTY, FLORIDA
METRO-DADE FLAGLER BUILDING

BUILDING CODE COMPLIANCE OFFICE
METRO-DADE FLAGLER BUILDING
140 WEST FLAGLER STREET, SUITE 1603
MIAMI, FLORIDA 33130-1563
(305) 375-2901 FAX (305) 375-2908

CONTRACTOR LICENSING SECTION
(305) 375-2527 FAX (305) 375-2558

CONTRACTOR ENFORCEMENT DIVISION
(305) 375-2966 FAX (305) 375-2908

PRODUCT CONTROL DIVISION
(305) 375-2902 FAX (305) 372-6339

PRODUCT CONTROL NOTICE OF ACCEPTANCE

Robinson & Sons Shutter Company
8400 N.W. 96 Street
Miami ,FL 33166

Your application for Notice of Acceptance (NOA) of:
Impact Resistant Accordion Shutter
under Chapter 8 of the Code of Miami-Dade County governing the use of Alternate Materials and Types of Construction, and completely described herein, has been recommended for acceptance by the Miami-Dade County Building Code Compliance Office (BCCO) under the conditions specified herein.

This NOA shall not be valid after the expiration date stated below. BCCO reserves the right to secure this product or material at any time from a jobsite or manufacturer's plant for quality control testing. If this product or material fails to perform in the approved manner, BCCO may revoke, modify, or suspend the use of such product or material immediately. BCCO reserves the right to revoke this approval, if it is determined by BCCO that this product or material fails to meet the requirements of the South Florida Building Code.

The expense of such testing will be incurred by the manufacturer.

ACCEPTANCE NO.: 00-0524.08
EXPIRES: 09/25/2003

Raul Rodriguez
Chief Product Control Division

THIS IS THE COVERSHEET, SEE ADDITIONAL PAGES FOR SPECIFIC AND GENERAL CONDITIONS
BUILDING CODE & PRODUCT REVIEW COMMITTEE

This application for Product Approval has been reviewed by the BCCO and approved by the Building Code and Product Review Committee to be used in Miami-Dade County, Florida under the conditions set forth above.

Francisco J. Quintana, R.A.
Director
Miami-Dade County
Building Code Compliance Office

APPROVED: 08/24/2000

Robinson & Sons Shutter Company

ACCEPTANCE No. : 00-0524.08

APPROVED : AUG 2 4 2000

EXPIRES : 09/25/2003

NOTICE OF ACCEPTANCE: SPECIFIC CONDITIONS

1. SCOPE

This renews the Notice of Acceptance No. 97-0819.02, which was issued on September 25, 1997. It approves an aluminum accordion type shutter, as described in Section 2 of this Notice of Acceptance, designed to comply with the South Florida Building Code, 1994 Edition for Miami-Dade County, for the locations where the pressure requirements, as determined by SFBC Chapter 23, do not exceed the Design Pressure Rating values indicated in the approved drawings.

2. PRODUCT DESCRIPTION

This aluminum accordion type shutter and its components shall be constructed in strict compliance with the following documents: Drawing No. 94-91 titled "Impact Resistant Accordion Shutter", prepared by Tilteco Inc., dated April 7, 1994, last revision #1 dated September 30, 1994, sheets 1 through 6 of 6, bearing the Miami-Dade County Product Control Approval and Renewal stamps with the Notice of Acceptance numbers and approval dates by the Miami-Dade County Product Control Division. These documents shall hereinafter be referred to as the approved drawings.

3. LIMITATIONS

All permanent set components, included but not limited to embedded anchor bolts, threaded cones, metal shields, headers and sills, must be protected against corrosion, contamination and damage at all times.

4. INSTALLATION

This aluminum accordion type shutter and its components shall be installed in strict compliance with the approved drawings.

5. LABELING

Each unit shall bear a permanent label with the manufacturer's name or logo, city, state and the following statement: "Miami-Dade County Product Control Approved".

6. BUILDING PERMIT REQUIREMENTS

6.1 Application for building permit shall be accompanied by copies of the following:

- **6.1.1** This Notice of Acceptance.
- **6.1.2** Duplicate copies of the approved drawings, as identified in Section 2 of this Notice of Acceptance, clearly marked to show the components selected for the proposed installation.
- **6.1.3** Any other documents required by the Building Official or the South Florida Building Code (SFBC) in order to properly evaluate the installation of this system.

Helmy A. Makar, P.E.- Product Control Examiner
Product Control Division

Robinson & Sons Shutter Company

ACCEPTANCE No. : 00-0524.08

APPROVED : AUG 2 4 2000

EXPIRES : 09/25/2003

NOTICE OF ACCEPTANCE: STANDARD CONDITIONS

1 Renewal of this Acceptance (approval) shall be considered after a renewal application has been filed and the original submitted documents, including test-supporting data, engineering documents, are no older than eight (8) years.

2. Any and all approved products shall be permanently labeled with the manufacturer's name, city, state, and the following statement: "Miami-Dade County Product Control Approved", or as specifically stated in the specific conditions of this Acceptance.

3. Renewals of Acceptance will not be considered if:
   a. There has been a change in the South Florida Building Code affecting the evaluation of this product and the product is not in compliance with the code changes.
   b. The product is no longer the same product (identical) as the one originally approved.
   c. If the Acceptance holder has not complied with all the requirements of this acceptance, including the correct installation of the product.
   d. The engineer, who originally prepared, signed and sealed the required documentation initially submitted, is no longer practicing the engineering profession.

4. Any revision or change in the materials, use, and/or manufacture of the product or process shall automatically be cause for termination of this Acceptance, unless prior written approval has been requested (through the filing of a revision application with appropriate fee) and granted by this office.

5. Any of the following shall also be grounds for removal of this Acceptance:
   a. Unsatisfactory performance of this product or process.
   b. Misuse of this Acceptance as an endorsement of any product, for sales, advertising or any other purposes.

6. The Notice of Acceptance number preceded by the words Miami-Dade County, Florida, and followed by the expiration date may be displayed in advertising literature. If any portion of the Notice of Acceptance is displayed, then it shall be done in its entirety.

7. A copy of this Acceptance as well as approved drawings and other documents, where it applies, shall be provided to the user by the manufacturer or its distributors and shall be available for inspection at the job site at all time. The engineer needs not reseal the copies.

8. Failure to comply with any section of this Acceptance shall be cause for termination and removal of Acceptance.

9. This Notice of Acceptance consists of pages 1, 2 and this last page 3.

END OF THIS ACCEPTANCE

Helmy A. Makar

Helmy A. Makar, P.E.- Product Control Examiner
Product Control Division

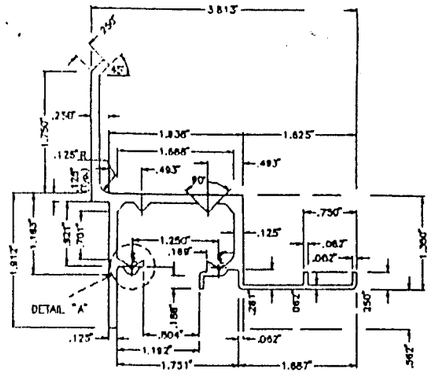

Ⓐ HEADER

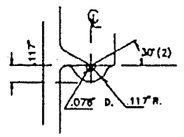

DETAIL "A"
HEADER

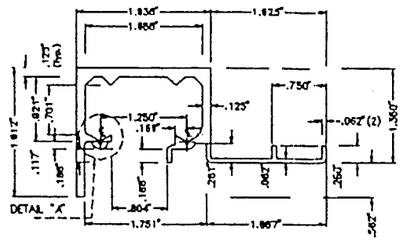

Ⓑ HEADER

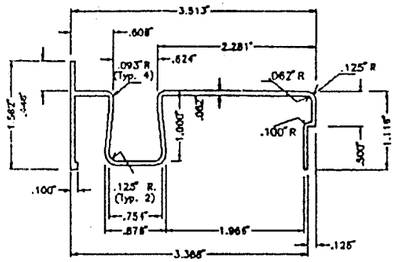

Ⓒ SILL

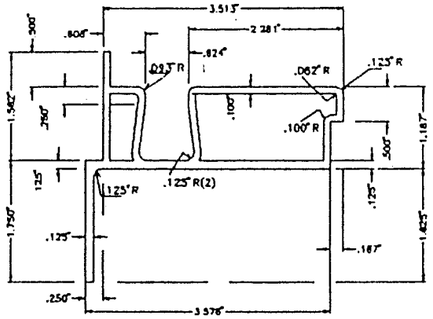

Ⓓ SILL

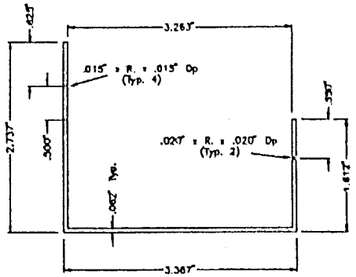

Ⓔ SILL ADAPTOR

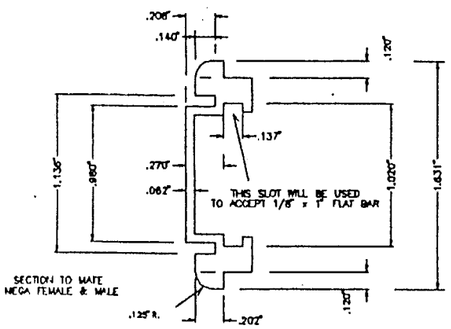

Ⓕ CENTERMATE LOCKING STYLE

6063-T5 AL. ALLOY

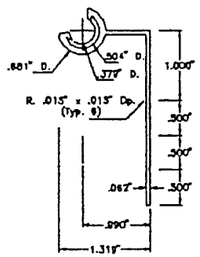

Ⓖ 90° STARTER

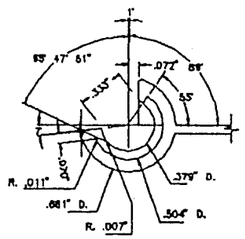

DETAIL

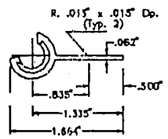

Ⓗ 180° STARTER

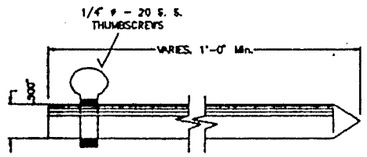

Ⓘ LOCKING PIN

6063-T5 AL. ALLOY

COMPONENTS

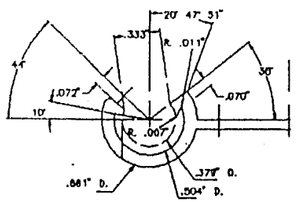

DETAIL

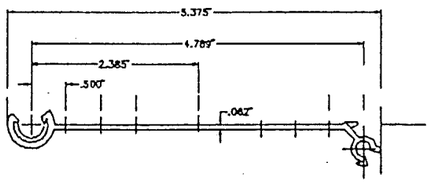

Ⓙ BLADE

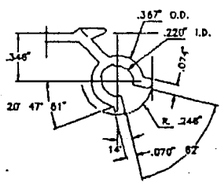

DETAIL

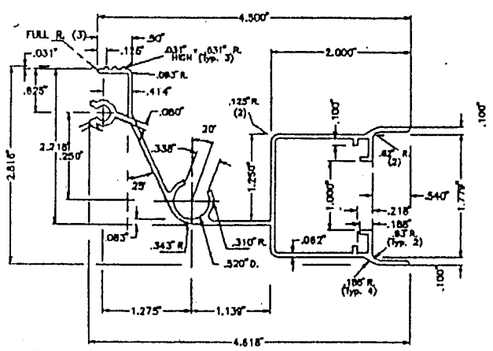

Ⓚ FEMALE CENTERMATE MEGA LOCK

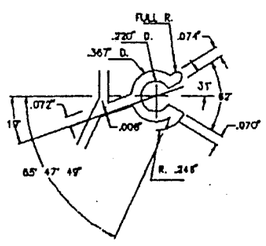

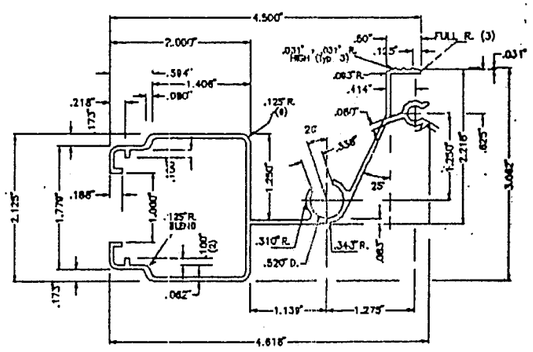

Ⓛ MALE CENTERMATE MEGA LOCK

6063-T5 AL. ALLOY

PRODUCT RENEWED
ACCEPTANCE No. 00-0524.08
EXPIRATION DATE 09/25/2003
By
PRODUCT CONTROL DIVISION
BUILDING CODE COMPLIANCE OFFICE

PRODUCT RENEWED

ACCEPTANCE No. 94-0819.02

EXPIRATION DATE SEPT. 25, 2000

By Manuel Perez

PRODUCT CONTROL DIVISION
BUILDING CODE COMPLIANCE OFFICE

APPROVED AS COMPLYING WITH THE
SOUTH FLORIDA BUILDING CODE

DATE October 31, 1994

BY

PRODUCT CONTROL DIVISION
BUILDING CODE COMPLIANCE OFFICE

ACCEPTANCE NO. 94-0816.02

GENERAL NOTES:

1. STANDARD ACCORDION SHUTTER HAS BEEN DESIGNED IN ACCORDANCE WITH THE DADE COUNTY, 1988 EDITION OF THE SOUTH FLORIDA BUILDING CODE, WITH THE 92' & 93' REVISIONS, AND THE 1994 BROWARD COUNTY EDITION OF THE SOUTH FLORIDA BUILDING CODE.
   WIND VELOCITY CONSIDERED IS 110 m.p.h. IMPORTANCE FACTOR IS 1.05.
   COASTAL ZONE WIND LOADS DETERMINED FOR EXPOSURE "D" FOR BUILDINGS WITH MEAN ROOF HEIGHT OVER 60'-0" ONLY, AND FOR EXPOSURE "C" FOR BUILDINGS FOR MEAN ROOF HEIGHT EQUAL OR LESS THAN 60'-0".
   NON COASTAL ZONE WIND LOADS DETERMINED FOR EXPOSURE "C", AS REQUIRED BY ASCE 7-88.
   IMPACT RESISTANT ACCORDION SHUTTER'S ADEQUACY FOR IMPACT AND FATIGUE RESISTANCE HAS BEEN VERIFIED IN ACCORDANCE WITH SECTIONS 2315 & 2314 RESPECTIVELY OF THE ABOVE MENTIONED CODE.
2. STAINLESS STEEL SHEET METAL SCREWS USED AT LOUVER PIN SHALL BE # 14 x 3", 410-HT MINIMUN SERIES W/ 135.0 ksi YIELD POINT & 180.0 ksi TENSILE STRENGTH. SCREWS SHALL BE COATED WITH XYLAN 5000 SERIES FLUOROPOLYMER COATINGS AS MANUFACTURED BY WHITFORD Co, BOX 307, WEST CHESTER PA. 19381.
3. ALL ALUMINUM EXTRUSIONS SHALL BE 6063-T6 ALLOY UNLESS OTHERWISE NOTED.
4. ALL SCREWS TO BE STAINLESS STEEL 304 OR 316 SERIES.
5. ALL ALUMINUM POP RIVETS TO BE 5052 ALUMINUM ALLOY WITH ALUMINUM MANDREL.
6. BOLTS TO BE 2024-T4 ALUMINUM ALLOY, GALVANIZED OR STAINLESS STEEL WITH 36 ksi MINIMUM YIELD POINT.
7. ANCHORS TO WALL SHALL BE AS FOLLOWS: (UNLESS OTHERWISE NOTED)
   (A) TO EXISTING POURED CONCRETE:
   - 1/4" ø x 1 1/4" OR 1/4" ø x 2" DIAMOND HAMMER DRIVE PINS.
   - 1/4" ø x 1 1/4" OR 1/4" ø x 2" THUNDERNAILS OR RAWL ZAMAC NAILIN, AS MANUFACTURED BY UNIFAST INDUSTRIES, INC AND THE RAWL PLUG COMPANY, INC, RESPECTIVELY.
   - 1/4" ø x 7/8" STAR TAMPIN ANCHORS OR 1/4" ø x 7/8" RAWL HOLLOW SET DROP-IN AS MANUFACTURED BY STAR EXPANSION AND THE RAWL PLUG COMPANY, INC, RESPECTIVELY.

   NOTES:
   A.1) 1 1/4" DIAMOND HAMMER DRIVE PINS, THUNDERNAILS OR RAWL ZAMAC NAILIN ANCHORS SHALL ONLY BE USED FOR INSTALLATIONS INTO EXPOSED CONCRETE WITH NO STUCCO OR ANY FINISH. USE 2" DIAMOND HAMMER DRIVE PINS OR 2" THUNDERNAILS OR ZAMAC NAILIN ANCHORS FOR CASES WHEN STUCCO EXISTS.
   A.2) 7/8" TAMPIN ANCHORS 7/8" RAWL HOLLOW SET DROP-IN ANCHORS SHALL BE ENTIRELY EMBEDDED INTO THE POURED CONCRETE. NO EMBEDMENT INTO STUCCO SHALL BE PERMITED. 1/4" ø-20 SCREWS USED SHALL BE 2" LONG MINIMUM SHOULD STUCCO EXIST.
   A.3) IN CASE THAT PRECAST STONE, PRECAST CONCRETE PANELS, OR PAVERS BE FOUND ON THE EXISTING WALL OR FLOOR, ANCHORS SHALL BE LONG ENOUGH TO REACH THE MAIN STRUCTURE BEHIND SUCH PANELS. ANCHORAGE SHALL BE 1 1/4" MINIMUM FOR ANCHORS MENTIONED IN A.1), & 7/8" FOR ANCHORS MENTIONED IN A.2).

   (B) TO EXISTING CONCRETE BLOCK WALL:
   - 1/4" ø x 2" TAPCON ANCHORS OR 1/4" ø x 2" RAWL 304 S. S. TAPPER, AS MANUFACTURED BY L. T. W. RAWSET AND RAWL PLUG COMPANY, INC, RESPECTIVELY.
   - 1/4" ø 2" THUNDERNAILS OR RAWL ZAMAC NAILIN, AS MANUFACTURED BY UNIFAST INDUSTRIES, INC AND THE RAWL PLUG COMPANY, INC, RESPECTIVELY.
   - 1/4" ø X 7/8" STAR TAMPIN ANCHORS OR 1/4" ø x 7/8" RAWL HOLLOW SET DROP-IN AS MANUFACTURED BY STAR EXPASION AND THE RAWL PLUG COMPANY, INC, RESPECTIVELY.

   NOTES:
   B.1) MINIMUM EMBEDMENT OF TAPCON ANCHORS, RAWL 304 S. S. TAPPER ANCHORS, THUNDERNAILS AND ZAMAC NAILIN ANCHORS INTO THE CONCRETE BLOCK UNIT SHALL BE 1 1/4".
   B.2) 7/8" TAMPIN ANCHORS AND 7/8" RAWL HOLLOW SET DROP-IN ANCHORS SHALL BE ENTIRELY EMBEDDED INTO THE CONCRETE BLOCK UNIT, NO EMBEDMENT INTO STUCCO SHALL BE PERMITTED. 1/4" ø-20 SCREWS USED SHALL BE 2" LONG MINIMUM SHOULD STUCCO EXIST, AND 1 1/2" MINIMUM FOR WALLS WITH NO STUCCO.
   B.3) IN CASE THAT PRECAST STONE OR PRECAST CONCRETE PANELS BE FOUND ON THE EXISTING WALL, ANCHORS SHALL BE LONG ENOUGH TO REACH THE MAIN STRUCTURE BEHIND SUCH PANELS.ANCHORAGE SHALL BE 1 1/4" MINIMUM FOR ANCHORS MENTIONED IN B.1). & 7/8" FOR ANCHORS MENTIONED IN B.2).

   (C) ANCHORS SHALL BE INSTALLED FOLLOWING ALL OF THE RECOMMENDATIONS AND SPECIFICATIONS OF THE ANCHOR'S MANUFACTURER.
   (D) ANCHORAGE TO WOOD FRAME BUILDINGS NOT COVERED IN THIS DRAWING SHALL BE ENGINEERED ON A JOB BY JOB BASIS.
8. IT SHALL BE THE RESPONSIBILITY OF THE PERMIT HOLDER TO VERIFY THE STRUCTURAL ADEQUACY OF THE EXISTING STRUCTURE TO SUSTAIN THE NEW SUPERIMPOSED LOADS
9. THE BLADE Ⓙ AND THE KNUCKLES FOR LOCKERS Ⓚ & Ⓛ, & STARTERS Ⓖ & Ⓗ ARE UNDER THE PATENT OF EASTERN METALS.
10. SHUTTER MANUFACTURER'S STAMP SHALL BE PLACED ON THE EXPOSED SURFACE OF THE FEMALE CENTERMATE MEGA LOCK (COMPONENT Ⓚ).
    ONE LABEL SHALL BE PLACED FOR EVERY OPENING. LABEL SHALL READ AS FOLLOWS:
    "IMPACT RESISTANT ACCORDION SHUTTER"
    MANUFACTURED BY ROBINSON & SONS SHUTTER Co.
    6400 N.W. 96th. STREET
    MIAMI, FLORIDA 33166
    Phone 1-800-626-8173
    DADE COUNTY PRODUCT CONTROL APPROVED.

DADE COUNTY

TILTECO INC.
TILLIT TESTING & ENGINEERING COMPANY
8595 N.W. 36th. St., Ste. 217, VIRGINIA GARDENS, FL 33166
Phone : (305)871-1530 . Fax : (305)871-1531

WALTER A. TILLIT Jr., P. E.
FLORIDA Lic. # 44167

IMPACT RESISTANT ACCORDION SHUTTER

ROBINSON & SONS SHUTTER CO.
8400 N.W. 96th. ST.
MIAMI, FL 33166

REV. NO	DESCRIPTION	DATE	REV. No	DESCRIPTION	DATE
1	NOTES	9/30/94	3		
2			4		

SCALE

4/7/94
DATE

94 - 91
DRAWING No

SHEET 1 OF 6

Walter A. Tillit
10/3/94

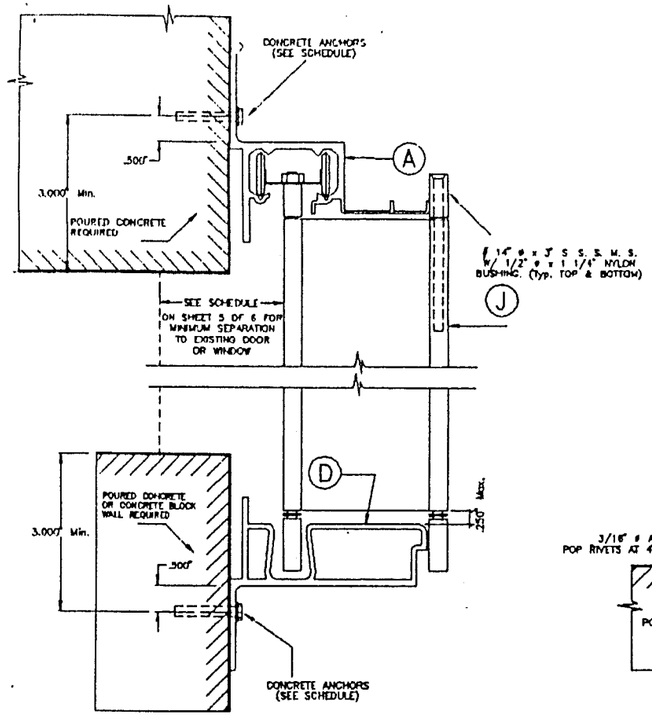

WALL MOUNTING INSTALLATION
– SECTION A

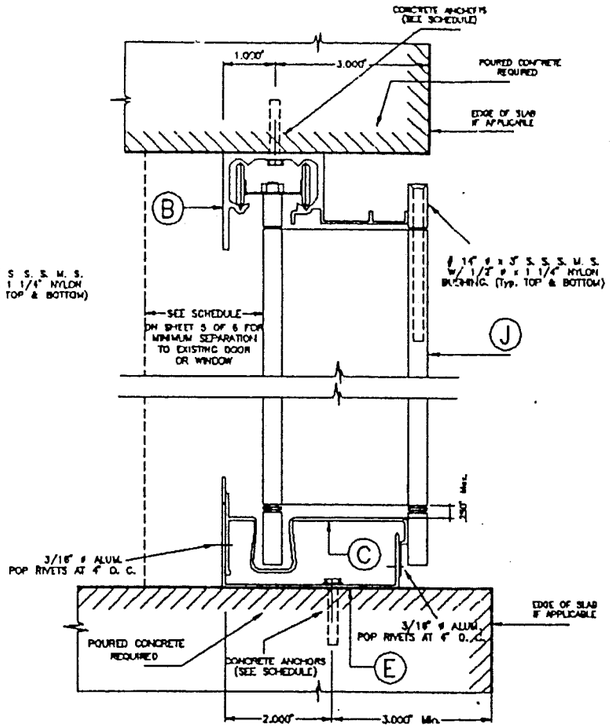

CEILING & FLOOR MOUNTING INSTALLATION
– SECTION B

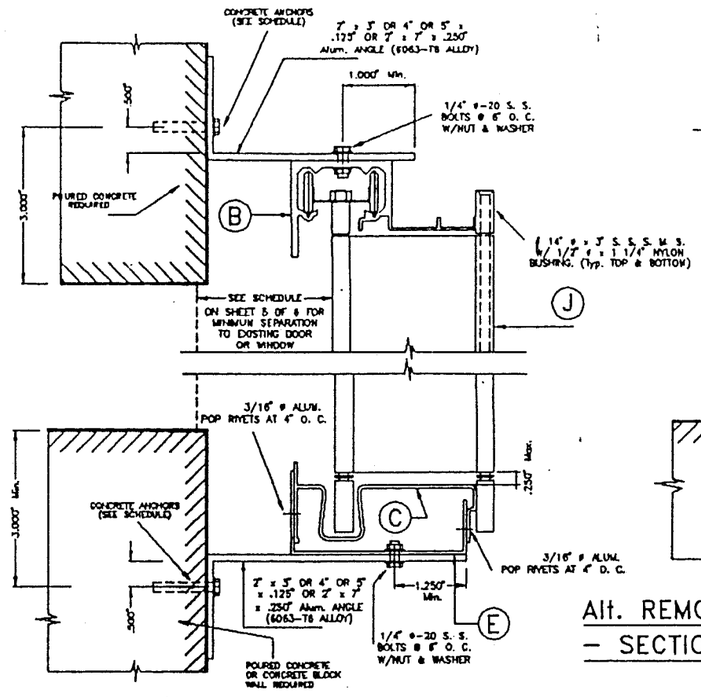

WALL MOUNTING INSTALLATION (OFFSET)
– SECTION A

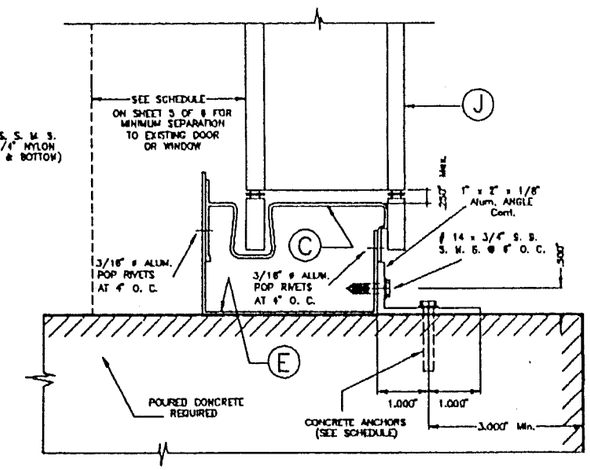

Alt. REMOVABLE FLOOR MOUNTING INSTALLATION
– SECTION B

PRODUCT RENEWED

ACCEPTANCE No. 00-0524.08

EXPIRATION DATE 09/25/2003

By Helena A. Molina

PRODUCT CONTROL DIVISION
BUILDING CODE COMPLIANCE OFFICE

INSTALLATION DETAILS

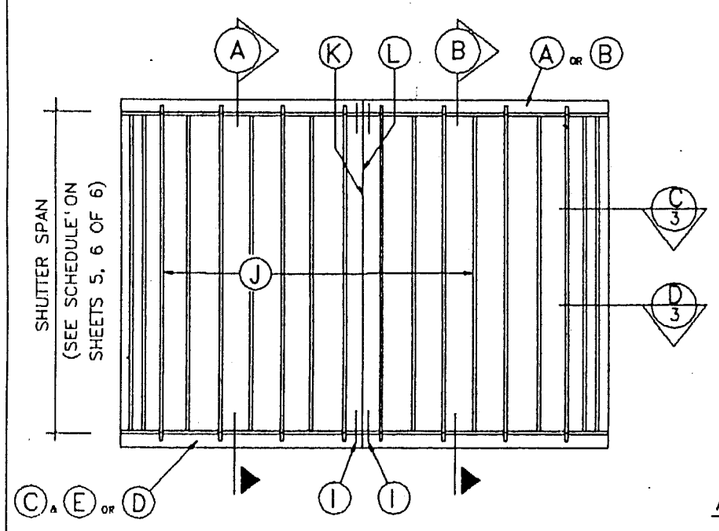

TYPICAL ELEVATION

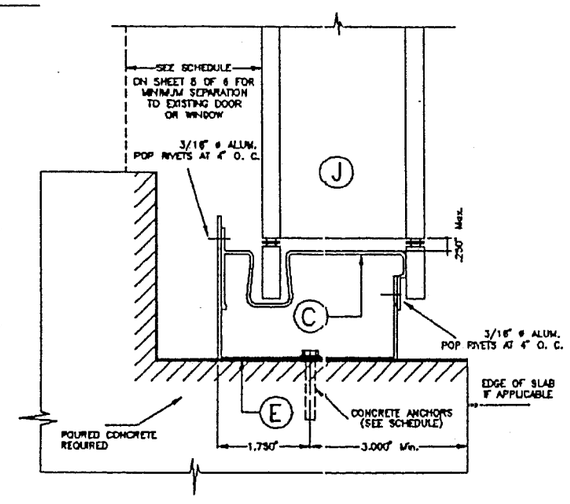

ALTERNATE FLOOR MOUNTING INSTALLATION
– SECTION B

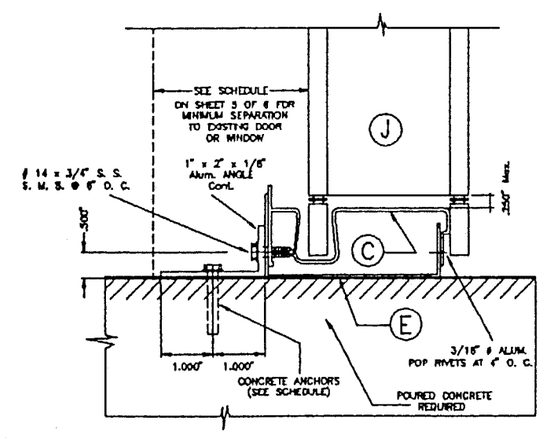

REMOVABLE FLOOR MOUNTING INSTALLATION
– SECTION B

PRODUCT RENEWED

ACCEPTANCE No. 97-0819.02

EXPIRATION DATE SEPT. 25, 2000

By Manuel Perez

PRODUCT CONTROL DIVISION
BUILDING CODE COMPLIANCE OFFICE

APPROVED AS COMPLYING WITH THE SOUTH FLORIDA BUILDING CODE

DATE October 31, 1994

BY

PRODUCT CONTROL DIVISION
BUILDING CODE COMPLIANCE OFFICE

ACCEPTANCE NO. 94-0816.02

DADE COUNTY

Walter A. Tillit
10/3/94

TILTECO INC.
TILLIT TESTING & ENGINEERING COMPANY
8595 N.W. 38th. St., Ste. 217, VIRGINIA GARDENS, FL 33166
Phone : (305)871-1530 . Fax : (305)871-1531
WALTER A. TILLIT Jr., P. E.
FLORIDA Lic. # 44167

IMPACT RESISTANT ACCORDION SHUTTER

ROBINSON & SONS SHUTTER CO.
8400 N.W. 96th. ST.
MIAMI, FL. 33166

REV. NO	DESCRIPTION	DATE	REV. No	DESCRIPTION	DATE
1		10/3/94	3		
2			4		

SCALE

4/7/94
DATE

94 – 91
DRAWING No

SHEET 2 OF 6

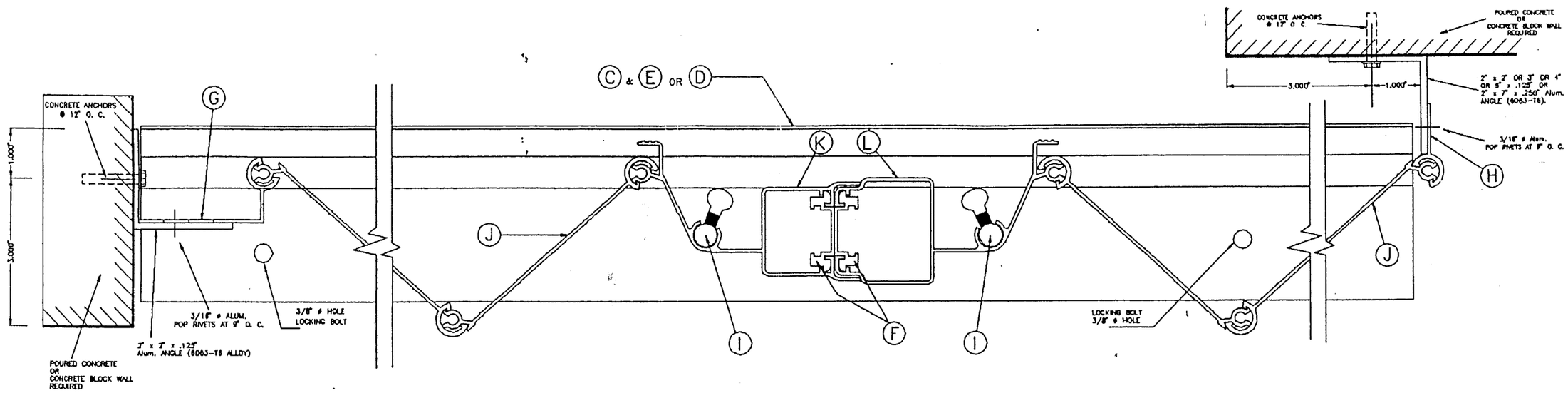

SECTION C

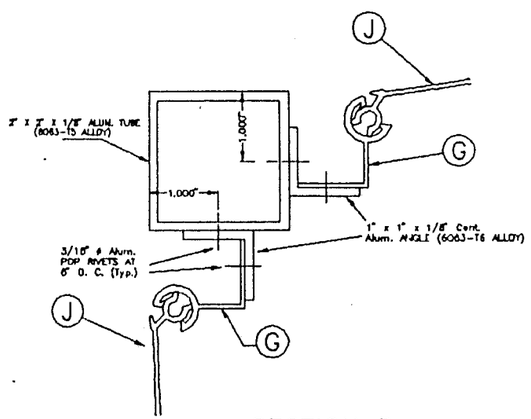

SECTION D

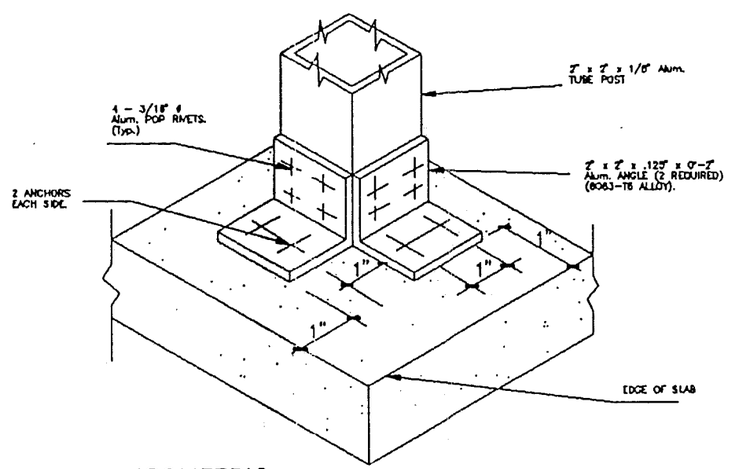

ISOMETRIC
(CORNER POST) (Typ. AT TOP & BOTTOM SLABS)

PRODUCT RENEWED

ACCEPTANCE No. 00-0524.08

EXPIRATION DATE 09/25/2003

By Helmy A. Mahr

PRODUCT CONTROL DIVISION
BUILDING CODE COMPLIANCE OFFICE

PRODUCT RENEWED

ACCEPTANCE No. 97-0819.02

EXPIRATION DATE SEPT. 25, 2000

By Manuel Perez

PRODUCT CONTROL DIVISION
BUILDING CODE COMPLIANCE OFFICE

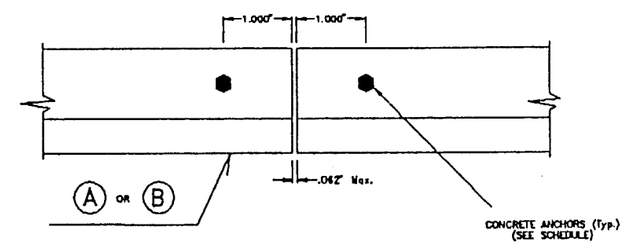

BUTT SPLICE DETAIL FOR DISCONTINUED HEADERS, SILLS OR ANGLES (OFFSET)

APPROVED AS COMPLYING WITH THE SOUTH FLORIDA BUILDING CODE

DATE Oct 31 1994

BY G. L. Diamond

PRODUCT CONTROL DIVISION
BUILDING CODE COMPLIANCE OFFICE

ACCEPTANCE NO. 94-0816.02

DADE COUNTY

Walter A. Tillit 10/3/94

TILTECO INC.

TILLIT TESTING & ENGINEERING COMPANY
6595 N.W. 36th. St., Ste. 217, VIRGINIA GARDENS, FL. 33166
Phone : (305)871-1530 . Fax : (305)871-1531

WALTER A. TILLIT Jr., P. E.
FLORIDA Lic. # 44167

IMPACT RESISTANT ACCORDION SHUTTER

ROBINSON & SONS SHUTTER CO.
8400 N.W. 96th. ST.
MIAMI, FL. 33166

REV. NO	DESCRIPTION	DATE	REV. No	DESCRIPTION	DATE
1		10/3/94	3		
2			4		

SCALE

4/7/94
DATE

94 - 91
DRAWING No

SHEET 3 OF 6

NOTES:

1. INSTALLATIONS ARE ONLY VALID FOR BUILDINGS WITH MEAN ROOF HEIGHT LESS OR EQUAL THAN 30 FEET, AND 8'-0" Max. SHUTTER SPAN.
2. NEW 2" x 6" P. T. TO BE SOUTHERN PINE No. 2, SURFACED DRY WITH 19 % M. M. C. W/ SPECIFIC DENSITY OF 0.55.
3. FOR NEW WOOD FRAME CONSTRUCTION: WOOD MEMBERS TO BE SOUTHERN PINE No. 2, W/ SPECIFIC DENSITY OF 0.55 OR EQUAL.

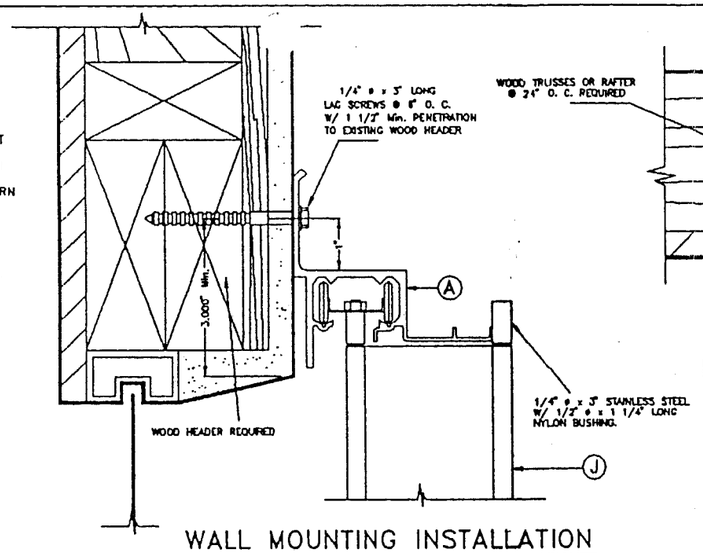

WALL MOUNTING INSTALLATION

– SECTION A

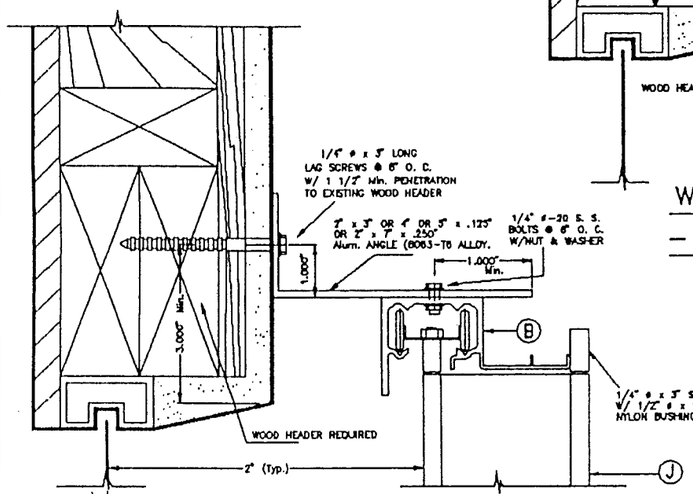

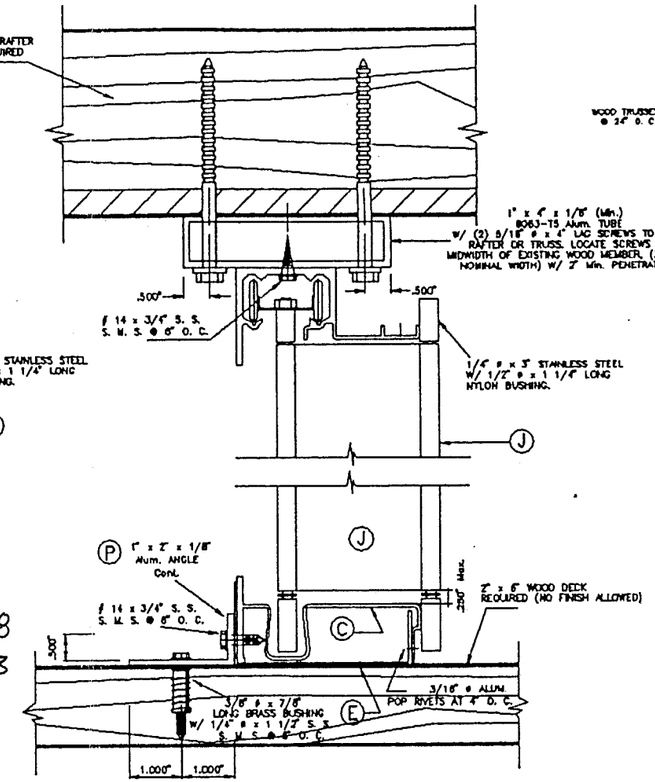

CEILING & REMOVABLE FLOOR MOUNTING INSTALLATION

SECTION B

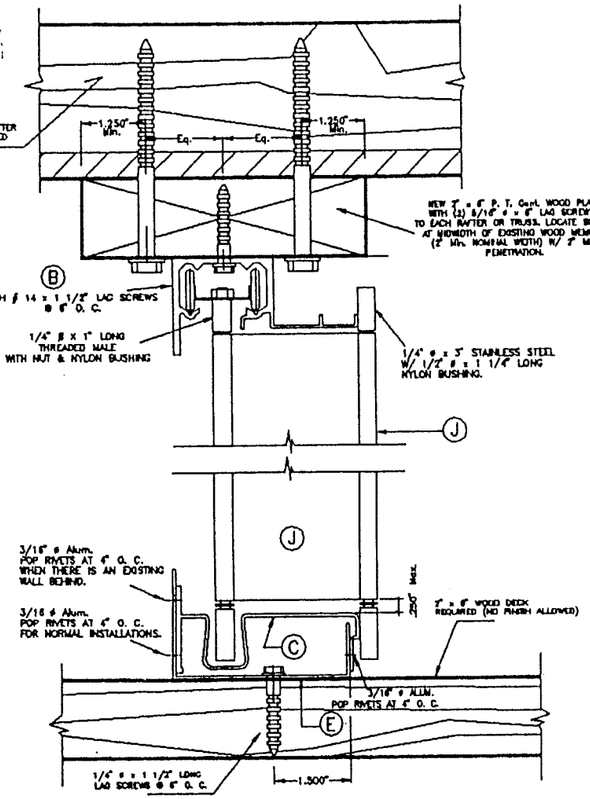

CEILING & FLOOR MOUNTING

INSTALLATION – SECTION B

PRODUCT RENEWED

ACCEPTANCE No. 00-0524.08

EXPIRATION DATE 09/25/2003

By Helmy A. Mekkawy

PRODUCT CONTROL DIVISION
BUILDING CODE COMPLIANCE OFFICE

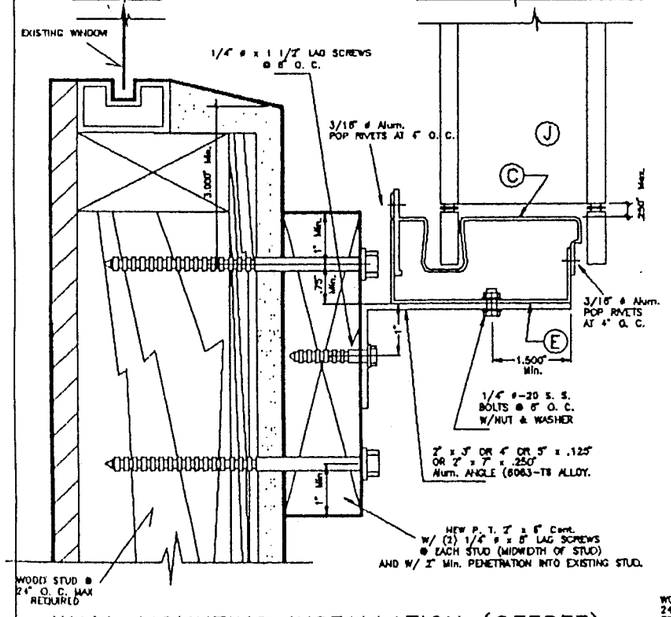

WALL MOUNTING INSTALLATION (OFFSET)

– SECTION A

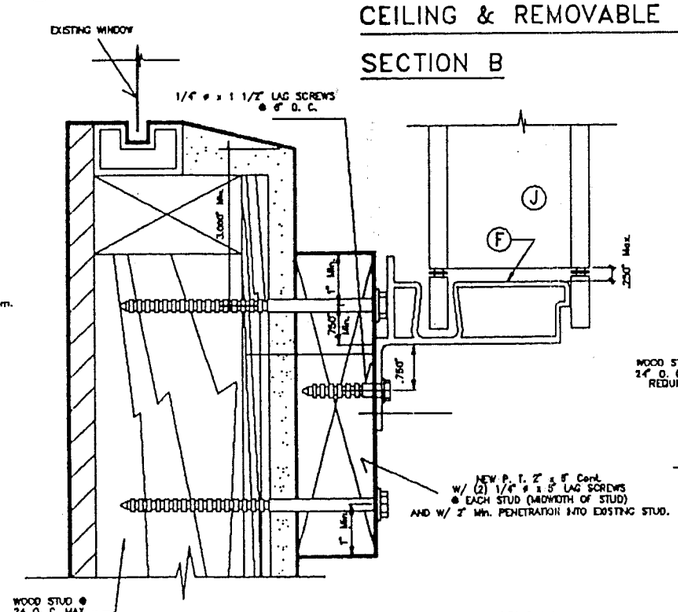

WALL MOUNTING INSTALLATION

– SECTION A

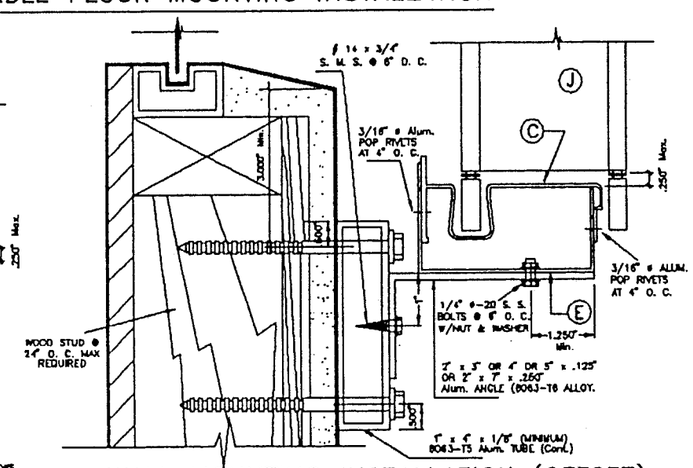

WALL MOUNTING INSTALLATION (OFFSET)

– SECTION A

PRODUCT RENEWED

ACCEPTANCE No. 97-0819.02

EXPIRATION DATE SEPT. 25, 2000

By Manuel Pérez

PRODUCT CONTROL DIVISION
BUILDING CODE COMPLIANCE OFFICE
APPROVED AS COMPLYING WITH THE
SOUTH FLORIDA BUILDING CODE
DATE October 31, 1997
BY [illegible]
PRODUCT CONTROL DIVISION
BUILDING CODE COMPLIANCE OFFICE
ACCEPTANCE NO. 94-0816.02

DADE COUNTY

INSTALLATION DETAILS ON EXISTING WOOD BUILDINGS

Walter A. Tillit 10/3/94

TILTECO INC.
TILLIT TESTING & ENGINEERING COMPANY
6595 N.W. 36th. St., Ste. 217, VIRGINIA GARDENS, FL 33166
Phone : (305)871-1530 . Fax : (305)871-1531
WALTER A. TILLIT Jr., P. E.
FLORIDA Lic. # 44167

IMPACT RESISTANT ACCORDION SHUTTER

ROBINSON & SONS SHUTTER CO.
8400 N.W. 96th. ST.
MIAMI, Fl. 33166

REV. NO	DESCRIPTION	DATE	REV. No	DESCRIPTION	DATE
1		10/3/94	3		
2			4		

SCALE

4/7/94
DATE

94 – 91
DRAWING No

SHEET 4 OF 6

MAXIMUM DESIGN PRESSURE RATING "W" (p.s.f.) AND CORRESPONDING MAXIMUM SPAN "L" SCHEDULE

MAXIMUM DESIGN LOAD W (p.s.f.)	MAXIMUM PANEL SPAN L (ft.)		MINIMUM SEPARATION TO GLASS (in.)	
	*	**	*	**
45.1	16'-0"	11'-4"	3 7/8"	2"
47.8	15'-6"	11'-2"	3 7/8"	2"
49.0	15'-4"	11'-2"	3 7/8"	2"
50.5	15'-1"	11'-0"	3 7/8"	2"
52.0	14'-10"	11'-0"	3 11/16"	2"
52.4	14'-10"	10'-11"	3 11/16"	2"
55.0	14'-6"	10'-10"	3 11/16"	2"
55.2	14'-5"	10'-10"	3 11/16"	2"
55.6	14'-4"	10'-9"	3 11/16"	2"
57.2	14'-2"	10'-9"	3 11/16"	2"
58.6	14'-0"	10'-8"	3 1/2"	2"
58.8	14'-0"	10'-7"	3 1/2"	2"
59.5	13'-10"	10'-7"	3 1/2"	2"
59.7	13'-10"	10'-7"	3 1/2"	2"
61.5	13'-8"	10'-6"	3 1/2"	2"
61.8	13'-8"	10'-6"	3 1/2"	2"
61.9	13'-7"	10'-6"	3 1/2"	2"
63.4	13'-6"	10'-5"	3 1/2"	2"
63.6	13'-5"	10'-5"	3 1/2"	2"
63.7	13'-5"	10'-5"	3 1/2"	2"
66.9	13'-1"	10'-4"	3 1/2"	2"
67.0	13'-1"	10'-4"	3 1/2"	2"
67.5	13'-0"	10'-3"	3 5/16"	2"
70.1	12'-10"	10'-2"	3 5/16"	2"
71.1	12'-9"	10'-2"	3 5/16"	2"
71.4	12'-8"	10'-2"	3 5/16"	2"
71.5	12'-8"	10'-2"	3 5/16"	2"
72.9	12'-7"	10'-1"	3 5/16"	2"
75.1	12'-5"	10'-0"	3 5/16"	2"
75.2	12'-4"	10'-0"	3 5/16"	2"
75.3	12'-4"	10'-0"	3 5/16"	2"
77.0	12'-3"	9'-11"	3 5/16"	2"
77.5	12'-2"	9'-11"	3 5/16"	2"
78.8	12'-1"	9'-10"	3 5/16"	2"
80.7	11'-11"	9'-10"	3 1/8"	2"
81.5	11'-11"	9'-10"	3 1/8"	2"
82.5	11'-10"	9'-9"	3 1/8"	2"
83.4	11'-9"	9'-9"	3 1/8"	2"
86.2	11'-7"	9'-8"	3 1/8"	2"
86.7	11'-6"	9'-8"	3 1/8"	2"

MAXIMUM DESIGN LOAD W (p.s.f.)	MAXIMUM PANEL SPAN L (ft.)		MINIMUM SEPARATION TO GLASS (in.)	
	*	**	*	**
86.8	11'-6"	9'-8"	3 1/8"	2"
88.5	11'-4"	9'-7"	3 1/8"	2"
90.3	11'-3"	9'-7"	3 1/8"	2"
90.8	11'-3"	9'-6"	3 1/8"	2"
91.4	11'-3"	9'-6"	3 1/8"	2"
92.7	11'-2"	9'-6"	3 1/8"	2"
93.8	11'-1"	9'-5"	3 1/8"	2"
94.5	11'-0"	9'-5"	2 15/16"	2"
96.6	10'-11"	9'-5"	2 15/16"	2"
96.8	10'-10"	9'-4"	2 15/16"	2"
97.7	10'-10"	9'-4"	2 15/16"	2"
100.5	10'-8"	9'-4"	2 15/16"	2"
101.5	10'-7"	9'-3"	2 15/16"	2"
103.7	10'-6"	9'-3"	2 15/16"	2"
106.5	10'-5"	9'-2"	2 15/16"	2"
108.8	10'-3"	9'-2"	2 15/16"	2"
110.6	10'-2"	9'-1"	2 15/16"	2"
111.0	10'-2"	9'-1"	2 15/16"	2"
114.1	10'-0"	9'-0"	2 3/4"	2"
116.5	9'-11"	9'-0"	2 3/4"	2"
116.9	9'-11"	8'-11"	2 3/4"	2"
117.6	9'-11"	8'-11"	2 3/4"	2"
119.7	9'-10"	8'-11"	2 3/4"	2"
121.2	9'-9"	8'-10"	2 3/4"	2"
122.5	9'-8"	8'-9"	2 3/4"	2"
125.3	9'-7"	8'-9"	2 3/4"	2"
125.8	9'-7"	8'-9"	2 3/4"	2"
126.7	9'-6"	8'-9"	2 3/4"	2"
129.6	9'-5"	8'-9"	2 3/4"	2"
130.9	9'-4"	8'-8"	2 3/4"	2"
131.6	9'-4"	8'-8"	2 3/4"	2"
134.3	9'-3"	8'-7"	2 3/4"	2"
136.2	9'-2"	8'-7"	2 3/4"	2"
137.9	9'-2"	8'-6"	2 3/4"	2"
140.7	9'-0"	8'-6"	2 9/16"	2"
142.8	9'-0"	8'-6"	2 9/16"	2"
143.5	8'-11"	8'-6"	2 9/16"	2"
147.0	8'-10"	8'-6"	2 9/16"	2"
148.4	8'-9"	8'-4"	2 1/2"	2"
152.6	8'-8"	8'-4"	2 1/2"	2"

MAXIMUM DESIGN LOAD W (p.s.f.)	MAXIMUM PANEL SPAN L (ft.)		MINIMUM SEPARATION TO GLASS (in.)	
	*	**	*	**
153.1	8'-8"	8'-4"	2 1/2"	2"
156.8	8'-7"	8'-4"	2 1/2"	2"
157.5	8'-6"	8'-4"	2 1/2"	2"
157.8	8'-6"	8'-4"	2 1/2"	2"
160.6	8'-3"	8'-3"	2 1/2"	2"
161.7	8'-3"	8'-3"	2 1/2"	2"
164.4	8'-2"	8'-3"	2 1/2"	2"
165.2	8'-1"	8'-3"	2 1/2"	2"
168.1	8'-0"	8'-2"	2 1/2"	2"
168.7	7'-11"	8'-2"	2 1/2"	2"
170.0	7'-11"	8'-2"	2 1/2"	2"
175.6	7'-8"	8'-1"	2 1/2"	2"

MAXIMUM DESIGN LOAD W (p.s.f.)	MAXIMUM PANEL SPAN L (ft.)		MINIMUM SEPARATION TO GLASS (in.)	
	*	**	*	**
176.6	7'-7"	8'-1"	2 1/2"	2"
180.3	7'-5"	8'-0"	2 1/2"	2"
185.0	7'-3"	7'-11"	2 1/2"	2"
188.0	7'-1"	7'-9"	2 1/2"	2"
192.5	7'-0"	7'-7"	2 1/2"	2"
197.2	6'-10"	7'-5"	2 1/2"	2"
199.1	6'-9"	7'-4"	2 1/2"	2"
204.7	6'-7"	7'-2"	2 1/2"	2"
211.3	6'-4"	6'-11"	2 1/2"	2"
216.9	6'-2"	6'-9"	2 1/2"	2"
221.6	6'-1"	6'-7"	2 1/2"	2"
226.3	5'-11"	6'-6"	2 1/2"	2"

* FOR SHUTTERS INSTALLED WITHIN THE FIRST 30'-0" ELEVATION OF BUILDING MEASURED @ BOTTOM OF SHUTTER, SEE TABLE 1 FOR MINIMUM SEPARATION FOR SPANS LESS THAN THE MAXIMUM ALLOWED.

** FOR SHUTTERS INSTALLED ABOVE 30'-0" ELEVATION OF BUILDING, MEASURED AT BOTTOM OF SHUTTER.

PRODUCT RENEWED
ACCEPTANCE No. 97-0819.02
EXPIRATION DATE SEPT. 25, 2000
By Manuel Perez
PRODUCT CONTROL DIVISION
BUILDING CODE COMPLIANCE OFFICE

PRODUCT RENEWED
ACCEPTANCE No. 00-0524.08
EXPIRATION DATE 09/25/2003
By Helena H. Maher
PRODUCT CONTROL DIVISION
BUILDING CODE COMPLIANCE OFFICE

APPROVED AS COMPLYING WITH THE SOUTH FLORIDA BUILDING CODE
DATE October 21, 1994
BY
PRODUCT CONTROL DIVISION
BUILDING CODE COMPLIANCE OFFICE
ACCEPTANCE NO. 94-0816.02

TABLE 1:

MINIMUM SEPARATION BETWEEN GLASS & BACK OF SHUTTER FOR A GIVEN SHUTTER SPAN "L", FOR SHUTTERS INSTALLED WITHIN THE FIRST 30'-0" ABOVE GRADE OF A GIVEN BUILDING. 30'-0" ELEVATION SHALL BE MEASURED AT BOTTOM OF SHUTTER.

SHUTTER SPAN "L" (ft.)	MINIMUM SEPARATION (in.)
8'-9" OR LESS	2 1/2"
>8'-9" TO 9'-0"	2 9/16"
>9'-0" TO 10'-0"	2 3/4"
>10'-0" TO 11'-0"	2 15/16"
>11'-0" TO 12'-0"	3 1/8"
>12'-0" TO 13'-0"	3 5/16"
>13'-0" TO 14'-0"	3 1/2"
>14'-0" TO 15'-0"	3 11/16"
>15'-0" TO 16'-0"	3 7/8"

DADE COUNTY

Walter A. Tillit 10/3/94

TILTECO INC.
TILLIT TESTING & ENGINEERING COMPANY
6525 N.W. 36th. St., Ste. 217, VIRGINIA GARDENS, FL 33166
Phone : (305)871-1536 Fax : (305)871-1531
WALTER A. TILLIT Jr., P. E.
FLORIDA Lic. # 44167

IMPACT RESISTANT ACCORDION SHUTTER

ROBINSON & SONS SHUTTER CO.
8400 N.W. 96th. ST.
MIAMI, FL 33166

REV. NO	DESCRIPTION	DATE	REV. No	DESCRIPTION	DATE
1	SEALS	10/3/94	3		
2			4		

SCALE
4/7/94
DATE
94 - 91
DRAWING No
SHEET 5 OF 6

MAXIMUM DESIGN PRESSURE RATING "W" (p.s.f.) AND CORRESPONDING MAXIMUM ANCHOR SPACING (in.) SCHEDULE.

(1)	(2)

MAXIMUM DESIGN LOAD W (p.s.f.)	WALL MOUNTING INSTALLATION AT TOP			WALL MOUNTING INSTALLATION AT BOTTOM			CEILING MOUNTING INSTALLATION TOP & BOTTOM		
FROM 45.1 TO 61.8	10"	7"		6"	4"		10"	8"	
FROM 61.8 TO 91.4	8"	5"		4"	3"		9"	7"	
FROM 91.5 TO 134.3	9"	6"	4"	5"	3"	3"	9"	7"	5"
FROM 134.4 TO 168.1	7"	5"	4"	4"	3"	3"	9"	6"	5"
FROM 168.2 TO 226.3	5"	3"	3"	3"	2 1/2"	2 1/2"	6"	4"	4"

(3)	(4)	(5)

PRODUCT RENEWED
ACCEPTANCE No. 00-0524.08
EXPIRATION DATE 09/25/2003
By [signature]
PRODUCT CONTROL DIVISION
BUILDING CODE COMPLIANCE OFFICE

PRODUCT RENEWED
ACCEPTANCE No. 97-0819.02
EXPIRATION DATE SEPT. 25, 2000
By [signature]
PRODUCT CONTROL DIVISION
BUILDING CODE COMPLIANCE OFFICE

ANCHOR SPACING LEGEND

(1) Max. ANCHOR SPCG. VALID FOR SPANS OF 8'-9" OR LESS.
(2) Max. ANCHOR SPCG. VALID FOR SPANS GREATER THAN 8'-9".
(3) Max. ANCHOR SPCG. VALID FOR SPANS OF 5'-0" OR LESS.
(4) Max. ANCHOR SPCG. VALID FOR SPANS GREATER THAN 5'-0" TO 7'-6".
(5) Max. ANCHOR SPCG. VALID FOR SPANS GREATER THAN 7'-6" TO Max. ALLOWED.

NOTES:
1. ANCHORS USED W/TRACK A (TOP OR BOTTOM) SHALL BE INSTALLED STAGGERED AT Max. SPACINGS INDICATED ON SCHEDULES.
2. ANCHORS USED W/REMAINING TRACK SYSTEMS SHALL BE INSTALLED ON A STRAIGHT PATTERN AT Max. SPACINGS INDICATED ON SCHEDULES.

APPROVED AS COMPLYING WITH THE SOUTH FLORIDA BUILDING CODE
DATE Oct 31 1994
BY [signature]
PRODUCT CONTROL DIVISION
BUILDING CODE COMPLIANCE OFFICE
ACCEPTANCE NO. 94-0816.02

DADE COUNTY

[signature]
10/3/97

TILTECO INC.
TILLIT TESTING & ENGINEERING COMPANY
6595 N.W. 36th. St., Ste. 217, VIRGINIA GARDENS, Fl. 33166
Phone : (305)871-1530 . Fax : (305)871-1531
WALTER A. TILLIT Jr., P. E.
FLORIDA Lic. # 44167

IMPACT RESISTANT ACCORDION SHUTTER

ROBINSON & SONS SHUTTER CO.
8400 N.W. 96th. ST.
MIAMI, Fl. 33166

REV. NO	DESCRIPTION	DATE	REV. No	DESCRIPTION	DATE
1	SPANS	10/3/94	3		
2			4		

SCALE
4/7/94
DATE
94 - 91
DRAWING No
SHEET 6 OF 6