MIAMI-DADE

MIAMI-DADE COUNTY, FLORIDA
METRO-DADE FLAGLER BUILDING

BUILDING CODE COMPLIANCE OFFICE
METRO-DADE FLAGLER BUILDING
140 WEST FLAGLER STREET, SUITE 1603
MIAMI, FLORIDA 33130-1563
(305) 375-2901 FAX (305) 375-2908

CONTRACTOR LICENSING SECTION
(305) 375-2527 FAX (305) 375-2558

CONTRACTOR ENFORCEMENT DIVISION
(305) 375-2966 FAX (305) 375-2908

PRODUCT CONTROL DIVISION
(305) 375-2902 FAX (305) 372-6339

PRODUCT CONTROL NOTICE OF ACCEPTANCE

Schuco Homecraft, L.P.
240 Pane Rd.
Newington ,CT 06111

Your application for Notice of Acceptance (NOA) of:
Series 5250 White PVC Fixed Window
under Chapter 8 of the Code of Miami-Dade County governing the use of Alternate Materials and Types of Construction, and completely described herein, has been recommended for acceptance by the Miami-Dade County Building Code Compliance Office (BCCO) under the conditions specified herein.

This NOA shall not be valid after the expiration date stated below. BCCO reserves the right to secure this product or material at any time from a jobsite or manufacturer's plant for quality control testing. If this product or material fails to perform in the approved manner, BCCO may revoke, modify, or suspend the use of such product or material immediately. BCCO reserves the right to revoke this approval, if it is determined by BCCO that this product or material fails to meet the requirements of the South Florida Building Code.

The expense of such testing will be incurred by the manufacturer.

ACCEPTANCE NO.: 00-0526.03
EXPIRES: 11/16/2003

Raul Rodriguez
Chief Product Control Division

THIS IS THE COVERSHEET, SEE ADDITIONAL PAGES FOR SPECIFIC AND GENERAL CONDITIONS
BUILDING CODE & PRODUCT REVIEW COMMITTEE

This application for Product Approval has been reviewed by the BCCO and approved by the Building Code and Product Review Committee to be used in Miami-Dade County, Florida under the conditions set forth above.

Francisco J. Quintana, R.A.
Director
Miami-Dade County
Building Code Compliance Office

APPROVED: 11/16/2000

Schuco Homecraft, L. P.

ACCEPTANCE No.: 00-0526.03

APPROVED : NOV 1 6 2000

EXPIRES : NOV 1 6 2003

NOTICE OF ACCEPTANCE: SPECIFIC CONDITIONS

1. SCOPE

1.1 This approves a white PVC fixed window, as described in Section 2 of this Notice of Acceptance, designed to comply with the South Florida Building Code (SFBC), 1994 Edition for Miami-Dade County, for the locations where the pressure requirements, as determined by SFBC Chapter 23, do not exceed the Design Pressure Rating values indicated in the approved drawings.

2. PRODUCT DESCRIPTION

2.1 The **Series 5250 White PVC Fixed Window** and its components shall be constructed in strict compliance with the following documents: Drawing No **S-2009**, Sheets 1 through 5 of 5, prepared by R. W. Building Consultants, Inc., titled "Schuco Welded Frame Fixed Windows up to a 130" x 70" Triple Unit" dated 4/27/00, with revision 1 dated 10/13/00, bearing the Miami-Dade County Product Control approval stamp with the Notice of Acceptance number and approval date by the Miami-Dade County Product Control Division. These documents shall hereinafter be referred to as the approved drawings.

3. LIMITATIONS

3.1 This approval applies to single unit applications and side-by-side installations, as shown in approved drawings.

4. INSTALLATION

4.1 The white PVC fixed window and its components shall be installed in strict compliance with the approved drawings.

4.2 Hurricane protection system (shutters): the installation of this unit **will require** a hurricane protection system.

5. LABELING

5.1 Each unit shall bear a permanent label with the manufacturer's name or logo, city, state and following statement: "Miami-Dade County Product Control Approved".

6. BUILDING PERMIT REQUIREMENTS

6.1 Application for building permit shall be accompanied by copies of the following:

6.1.1 This Notice of Acceptance

6.1.2 Duplicate copies of the approved drawings, as identified in Section 2 of this Notice of Acceptance, clearly marked to show the components selected for the proposed installation.

6.1.3 Any other documents required by the Building Official or the South Florida Building Code (SFBC) in order to properly evaluate the installation of this system.

Manuel Perez, P.E. Product Control Examiner
Product Control Division

Schuco Homecraft, L. P.

ACCEPTANCE No.: 00-0526.03

APPROVED : NOV 1 6 2000

EXPIRES : NOV 1 6 2003

NOTICE OF ACCEPTANCE: STANDARD CONDITIONS

1. Renewal of this Acceptance (approval) shall be considered after a renewal application has been filed and the original submitted documentation, including test supporting data, engineering documents, are no older than eight (8) years.

2. Any and all approved products shall be permanently labeled with the manufacturer's name, city, state, and the following statement: "Miami-Dade County Product Control Approved", or as specifically stated in the specific conditions of this Acceptance.

3. Renewals of Acceptance will not be considered if:
   a) There has been a change in the South Florida Building Code affecting the evaluation of this product and the product is not in compliance with the code changes;
   b) The product is no longer the same product (identical) as the one originally approved;
   c) If the Acceptance holder has not complied with all the requirements of this acceptance, including the correct installation of the product;
   d) The engineer who originally prepared, signed and sealed the required documentation initially submitted is no longer practicing the engineering profession.

4. Any revision or change in the materials, use, and/or manufacture of the product or process shall automatically be cause for termination of this Acceptance, unless prior written approval has been requested (through the filing of a revision application with appropriate fee) and granted by this office.

5. Any of the following shall also be grounds for removal of this Acceptance:
   a) Unsatisfactory performance of this product or process.
   b) Misuse of this Acceptance as an endorsement of any product, for sales, advertising or any other purpose.

6. The Notice of Acceptance number preceded by the words Miami-Dade County, Florida, and followed by the expiration date may be displayed in advertising literature. If any portion of the Notice of Acceptance is displayed, then it shall be done in its entirety.

7. A copy of this Acceptance as well as approved drawings and other documents, where it applies, shall be provided to the user by the manufacturer or its distributors and shall be available for inspection at the job site at all time. The engineer need not reseal the copies.

8. Failure to comply with any section of this Acceptance shall be cause for termination and removal of Acceptance.

9. This Notice of Acceptance consists of pages 1, 2 and this last page 3.

Manuel Perez, P.E. Product Control Examiner
Product Control Division

END OF THIS ACCEPTANCE

SCHÜCO HOMECRAFT L.P.

FIXED WINDOWS IN EXTRUDED VINYL FRAMES
5250 SERIES

GENERAL NOTES

1. THIS PRODUCT IS DESIGNED TO MEET THE SOUTH FLORIDA BUILDING CODE 1994 EDITION FOR MIAMI–DADE COUNTY.
2. WOOD BUCKS BY OTHERS, MUST BE ANCHORED PROPERLY TO TRANSFER LOADS TO THE STRUCTURE.
3. PRODUCT ANCHORS SHALL BE AS LISTED AND SPACED AS SHOWN ON DETAILS. ANCHOR EMBEDMENT TO BASE MATERIAL SHALL BE BEYOND WALL DRESSING OR STUCCO.
4. IMPACT RESISTANT SHUTTERS REQUIRED
5. FOR DESIGN PRESSURE RATING SEE CHART THIS PAGE:
6. WHEN MULLING UNITS TOGETHER A MAXIMUM OF (3) UNITS CAN BE USED BUT NOT TO EXCEED A TOTAL OF 130".
7. A SCHUCO CASEMENT WINDOW MAY BE SUBSTITUTED FOR EITHER END UNIT IN THE MULLED APPLICATION WITH THE SUBMITTAL OF A MIAMI–DADE COUNTY CASEMENT WINDOW NOTICE OF ACCEPTANCE.

FIXED FRAME WINDOWS
(Common to all conditions)

Window Construction:

Material: White P.V.C. lineal extrusions by PILLAR PLASTICS.

General: All corners are standard miters with fusion welds.

Wall Thickness Outer wall = .080";
Inner wall = .055"

Glazing Method: The exterior is wet glazed with GE SilGlaze II. The interior is capped with an extruded P.V.C. Glass Stop by Pillar Plastics.

TABLE OF CONTENTS

SHEET #	DESCRIPTION
1	ELEVATIONS
2	VERTICAL CROSS SECTION, B.O.M. & COMPONENTS
3	HORIZONTAL CROSS SECTION & GLAZING DETAILS
4	GLAZING DETAILS
5	ANCHORING LAYOUTS

DESIGN PRESSURE RATING

	SINGLE UNIT	MULLED UNIT
TEMPERED GLASS	+ 75.0 psf – 85.0 psf	+ 65.0 psf – 70.0 psf
ANNEALED GLASS	+ 75.0 psf – 85.0 psf	+ 65.0 psf – 70.0 psf

NOTE – ANNEALED GLASS D.L.O. NOT TO EXCEED 13 SQ. FEET

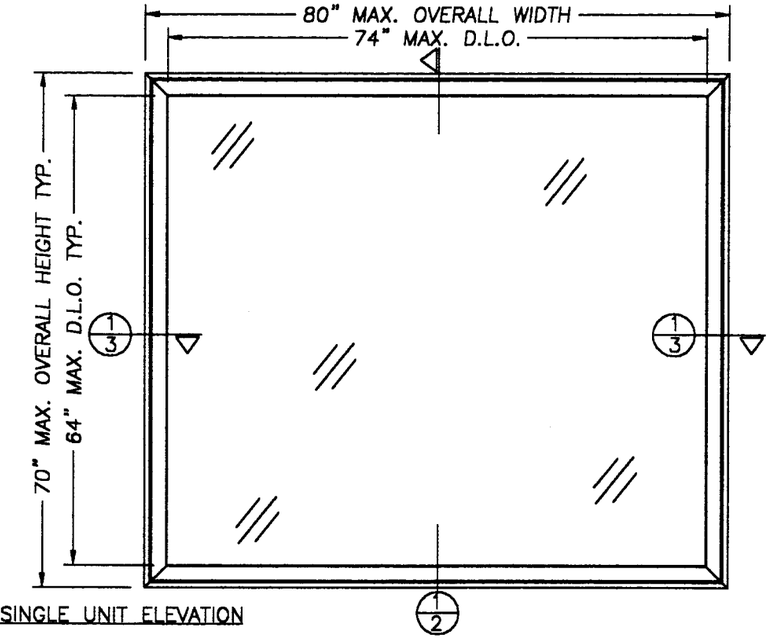

80" x 70" SINGLE UNIT ELEVATION

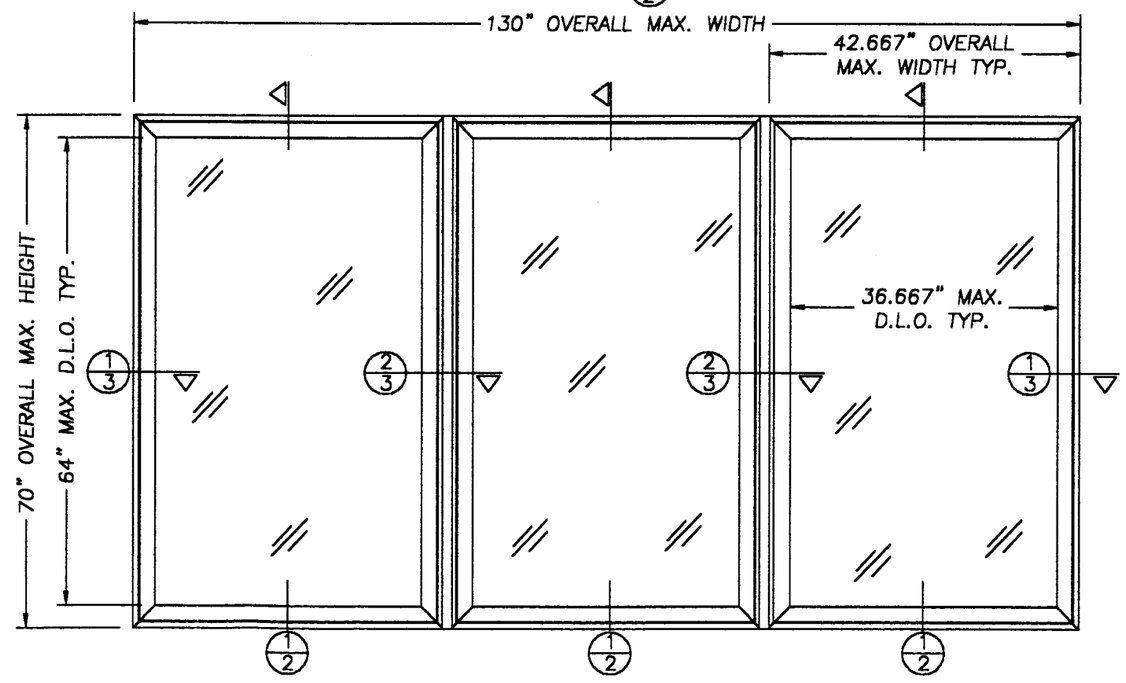

130" x 70"
TRIPLE UNIT ELEVATION

ALL UNITS ARE VIEWED FROM THE EXTERIOR.

APPROVED AS COMPLYING WITH THE SOUTH FLORIDA BUILDING CODE
DATE November 16, 2000
BY Manuel Perez
PRODUCT CONTROL DIVISION
BUILDING CODE COMPLIANCE OFFICE
ACCEPTANCE NO. 00-0526.03

SCHÜCO HOMECRAFT, L.P.
240 PANE ROAD
NEWINGTON, CT 06111
PH. 860.666.0505
FAX. 860.666.3351

PRODUCT: SCHUCO WELDED FRAME FIXED WINDOWS UP TO A 130" x 70" TRIPLE UNIT

PART OR ASSEMBLY: GENERAL NOTES ELEVATIONS

REVISIONS

NO.	DATE		BY
1	10/13/00	GENERAL REVISION	TJH

RW BUILDING CONSULTANTS, INC.
813.684.3831

DATE: 4/27/00
SCALE: N.T.S.
DWG. BY: TJH
CHK. BY: RW
DRAWING NO.: S–2009
SHEET 1 OF 5

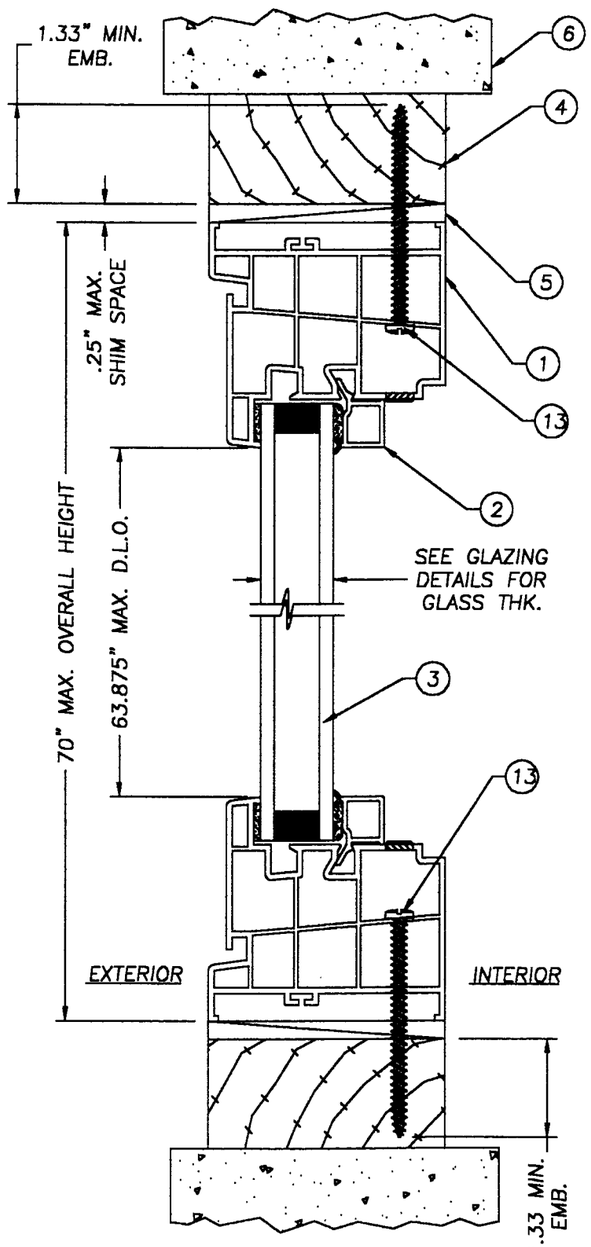

1/2 VERTICAL CROSS SECTION

ITEM	DESCRIPTION	MATERIAL
1	EXTRUDED FIXED WINDOW FRAME (PILLAR PLASTICS .080")	P.V.C.
2	EXTRUDED 13/16" GLASS STOP (PILLAR PLASTICS .062") EXTRUDED 1" GLASS STOP (PILLAR PLASTICS .062")	P.V.C.
3	GLAZING, 13/16" INSULATED TEMPERED GLASS (BY FLORAL) GLAZING, 1" INSULATED TEMPERED GLASS (BY FLORAL) GLAZING, 1" ANNEALED GLASS (BY SCHUCO HOMECRAFT)	SEE GLAZING DETAILS SHT. 3 & 4
4	2X MATERIAL (BUCK)	WOOD
5	1/4" MAX. SHIM SPACER	–
6	MASONRY WALL	–
7	EXTRUDED CENTER MULL (.119" WALL 6063–T6)	ALUM.
8	EXTRUDED MULL CAP (.080" WALL)	P.V.C.
9	GLAZING COMPOUND (GE SilGaze II SCS2800)	SILICONE
10	3/16" TAPCON MASONRY ANCHOR (ELCO)	STEEL
11	MULL ANCHORING CAP .125" THK. x 2.875" W. x 24" LG.(6063–T6)	ALUM.
12	#10 x 1" P.PH.S.M SCREW	STEEL
13	#10 x 3" P.H. SCREW	STEEL

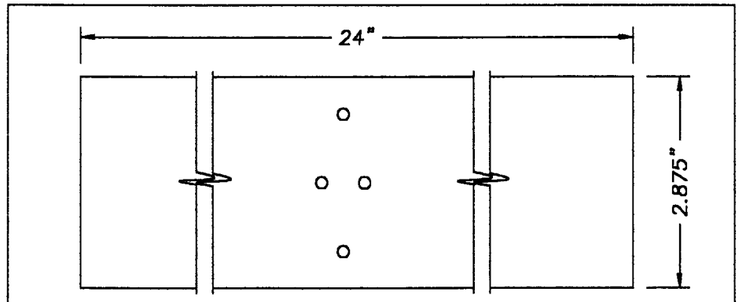

MULL ANCHORING CAP
.125" THK. 6063–T6 ALUM.
11

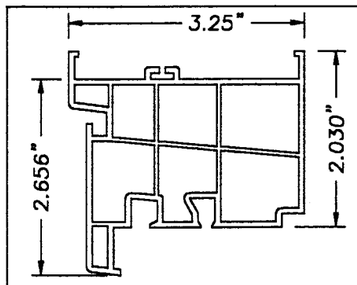

PICTURE WINDOW FRAME
EXTRUDED P.V.C.
.080" & .055" WALL
1

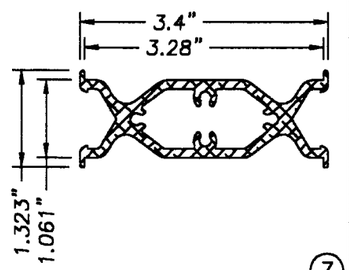

EXTRUDED ALUM. MULL
.119" WALL 6063–T6 ALUM.
7

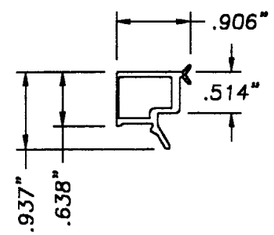

13/16" GLASS STOP
EXTRUDED P.V.C. .062" WALL
2

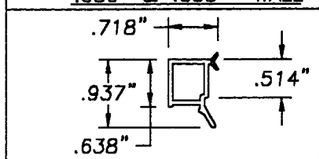

1" GLASS STOP
EXTRUDED P.V.C. .062" WALL
2

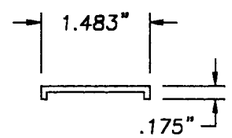

EXTRUDED MULL CAP
P.V.C. .080" WALL
8

APPROVED AS COMPLYING WITH THE SOUTH FLORIDA BUILDING CODE
DATE November 16, 2000
BY [signature]
PRODUCT CONTROL DIVISION
BUILDING CODE COMPLIANCE OFFICE
ACCEPTANCE NO. 00-0526.03

SCHÜCO HOMECRAFT, L.P.
240 PANE ROAD
NEWINGTON, CT 06111
PH. 860.666.0505
FAX. 860.666.3351

PRODUCT: SCHUCO WELDED FRAME FIXED WINDOWS UP TO 130" x 70" TRIPLE UNIT

PART OR ASSEMBLY: VERTICAL CROSS SECTION, B.O.M. & COMPONENTS

NO.	DATE	REVISIONS	BY
1.	10/13/00	GENERAL REVISION	TJH

RW BUILDING CONSULTANTS, INC.
813.684.3831

DATE: 4/27/00
SCALE: 1/2"=1"
DWG. BY: TJH
CHK. BY: RW
DRAWING NO.: S–2009
SHEET 2 OF 5

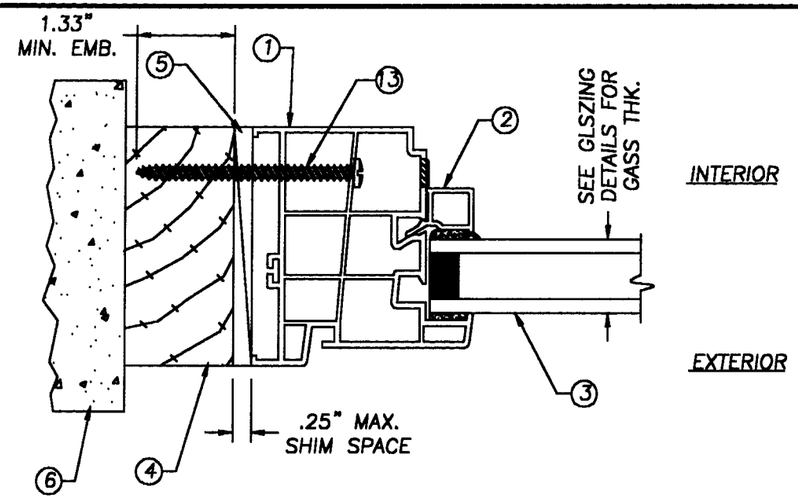

1/3 HORIZONTAL CROSS SECTION
FRAME TO BUCK, TYP.
SCALE: 1/2" = 1"

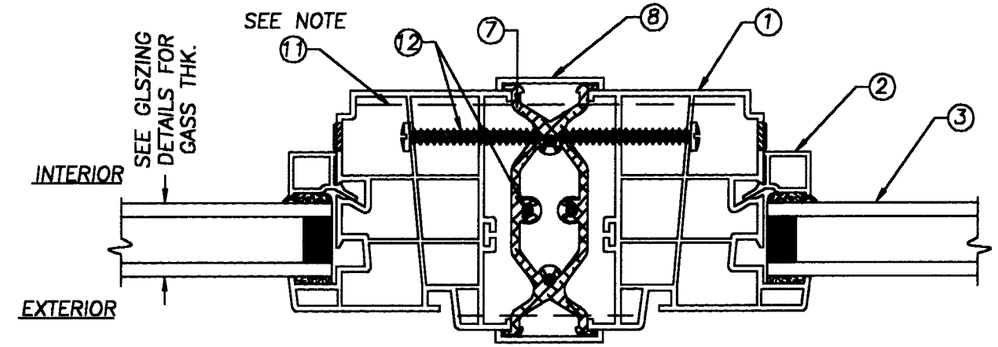

2/3 HORIZONTAL CROSS SECTION
AT THE MULL SECTION
SCALE: 1/2" = 1"

NOTE:
ITEM #11 IS NOT SHOWN IN DETAIL FOR CLARITY OF VIEW. THERE ARE (4) #12 SCREWS THRU ITEM #11 INTO EACH WINDOW AT EACH MULL.

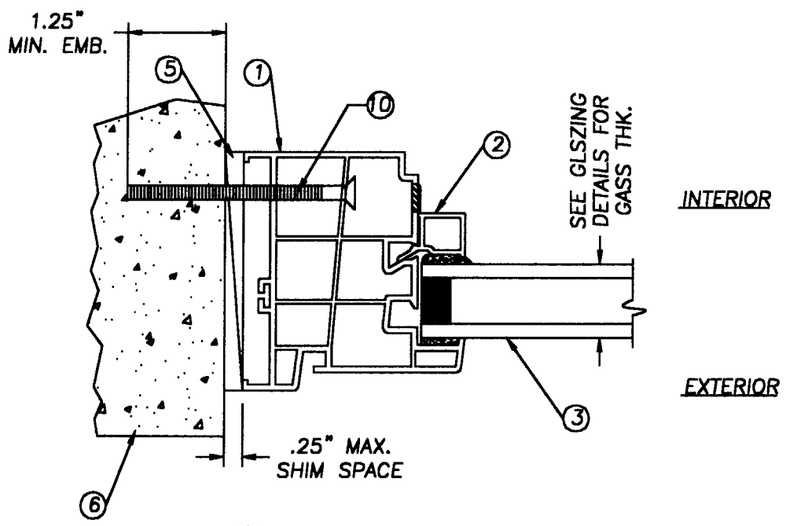

1/3 HORIZONTAL CROSS SECTION
FRAME TO MASONRY, TYP.
SCALE: 1/2" = 1"

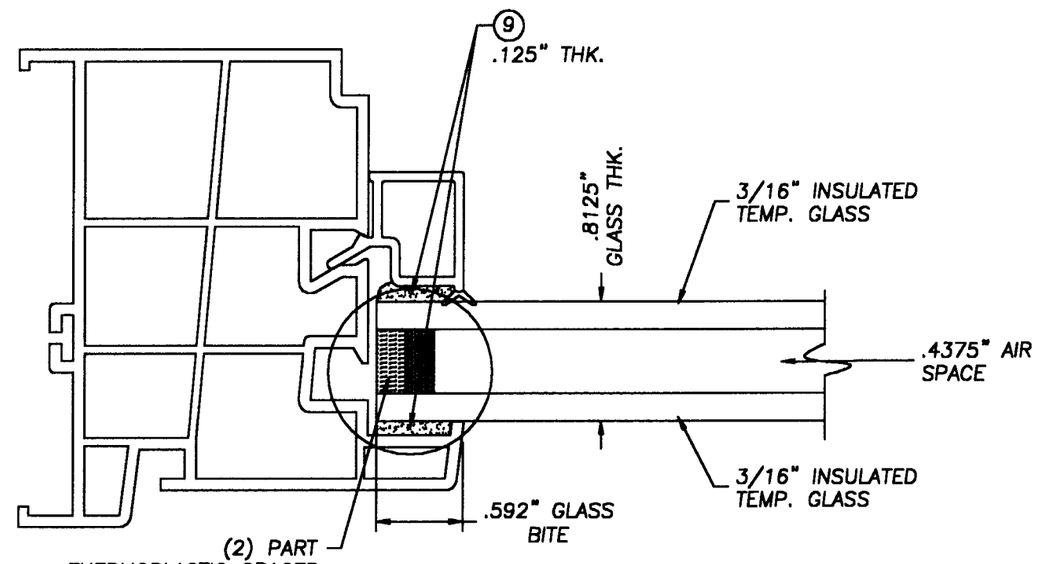

13/16" NOM. INSULATED TEMPERED GLASS
BY FLORAL. GLAZING DETAIL
SCALE: FULL

SCHÜCO HOMECRAFT, L.P.

240 PANE ROAD
NEWINGTON, CT 06111
PH. 860.666.0505
FAX. 860.666.3351

NO.	DATE	REVISIONS	BY
1.	10/13/00	GENERAL REVISION	TJH

PRODUCT:
SCHUCO WELDED FRAME FIXED WINDOW UP TO 130" x 70" TRIPLE UNIT

PART OR ASSEMBLY:
HORIZONTAL CROSS SECTION & GLAZING DETAIL

RW
BUILDING CONSULTANTS, INC.
813.684.3831

APPROVED AS COMPLYING WITH THE SOUTH FLORIDA BUILDING CODE
DATE November 16, 2000
BY [signature]
PRODUCT CONTROL DIVISION
BUILDING CODE COMPLIANCE OFFICE
ACCEPTANCE NO. 00-0526.03

DATE:	4/27/00
SCALE:	AS NOTED
DWG. BY:	TJH
CHK. BY:	RW
DRAWING NO.:	S-2009
SHEET	3 OF 5

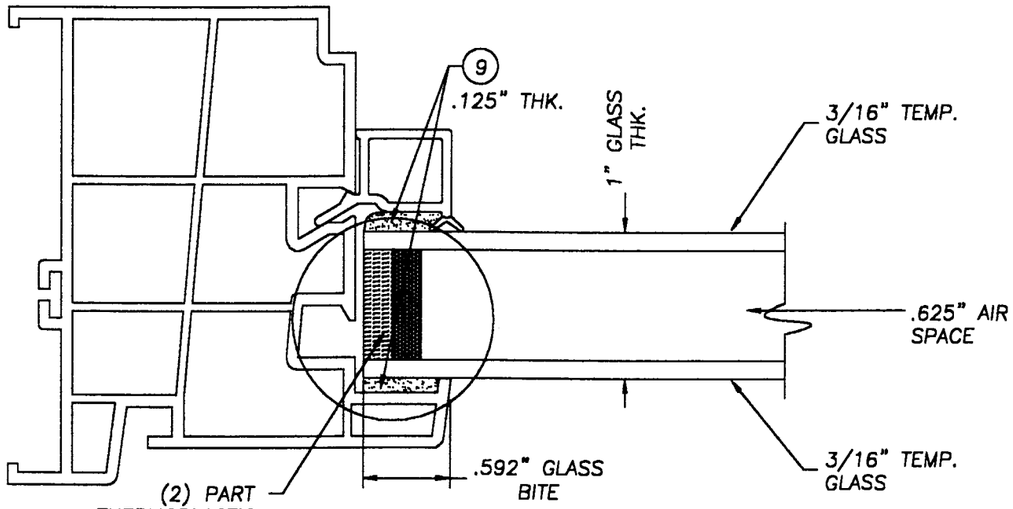

1" NOM. INSULATED TEMPERED GLASS
BY FLORAL, GLAZING DETAIL
SCALE: FULL

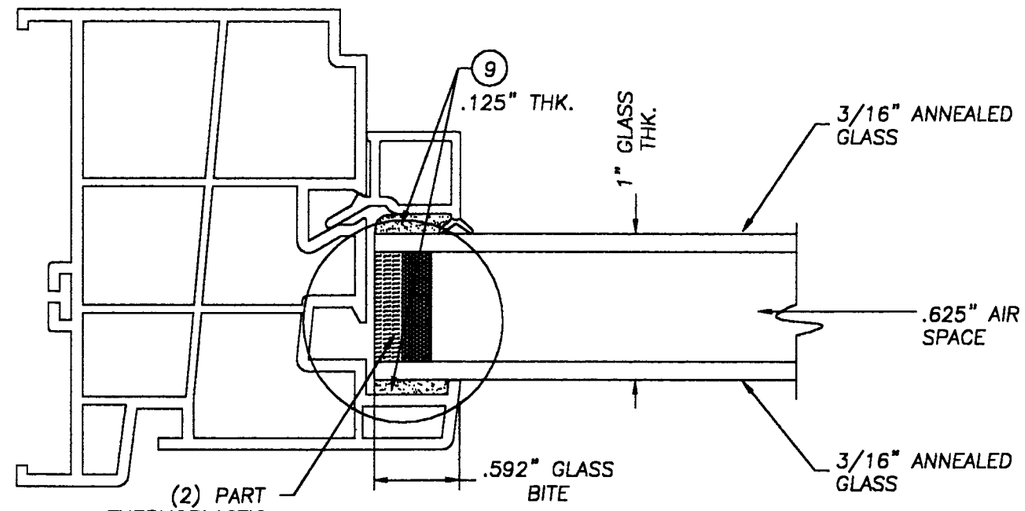

1" NOM. ANNEALED GLASS
BY SCHUCO HOMECRAFT, GLAZING DETAIL
SCALE: FULL

NOTE: MAX. DAYLITE OPENING FOR THIS OPTION IS 8.1 Sq. Ft. FOR DESIGN PRESSURE RATING INDICATED ON SHT. 1.

NOTE:
1. THE (2) PART THERMOPLASTIC SPACER, CONSISTS OF .197" THICK POLYSULFIDE AND .197" THICK TPS. SEE DETAIL "A" FOR CLARITY.

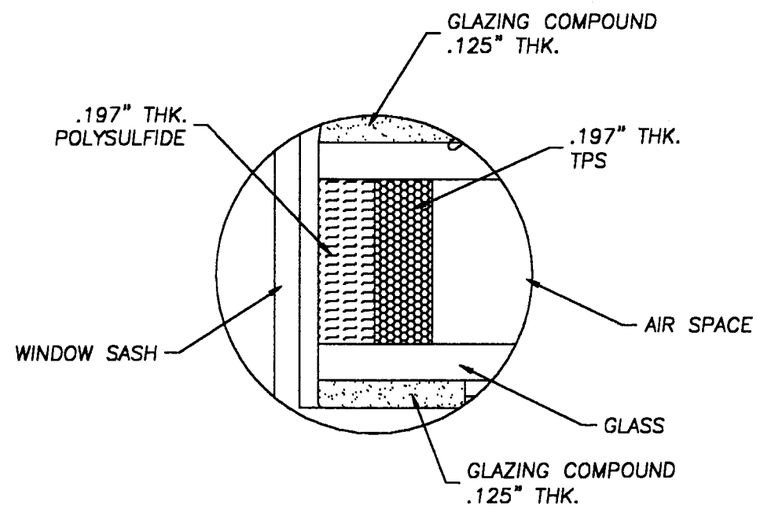

DETAIL "A"
SCALE: 2X

SCHÜCO HOMECRAFT, L.P.

240 PANE ROAD
NEWINGTON, CT 06111
PH. 860.666.0505
FAX. 860.666.3351

NO.	DATE	REVISIONS	BY
1.	10/13/00	GENERAL REVISION	TJH

PRODUCT:
SCHUCO WELDED FRAME FIXED WINDOWS UP TO 130" x 70" TRIPLE UNIT

PART OR ASSEMBLY:
GLAZING DETAIL

RW
BUILDING CONSULTANTS, INC.
813.684.3831

APPROVED AS COMPLYING WITH THE SOUTH FLORIDA BUILDING CODE
DATE November 16, 2000
BY Manuel Serra
PRODUCT CONTROL DIVISION
BUILDING CODE COMPLIANCE OFFICE
ACCEPTANCE NO. 00-0526.03

DATE: 2/27/00
SCALE: AS NOTED
DWG. BY: TJH
CHK. BY: RW
DRAWING NO.: S-2009
SHEET 4 OF 5

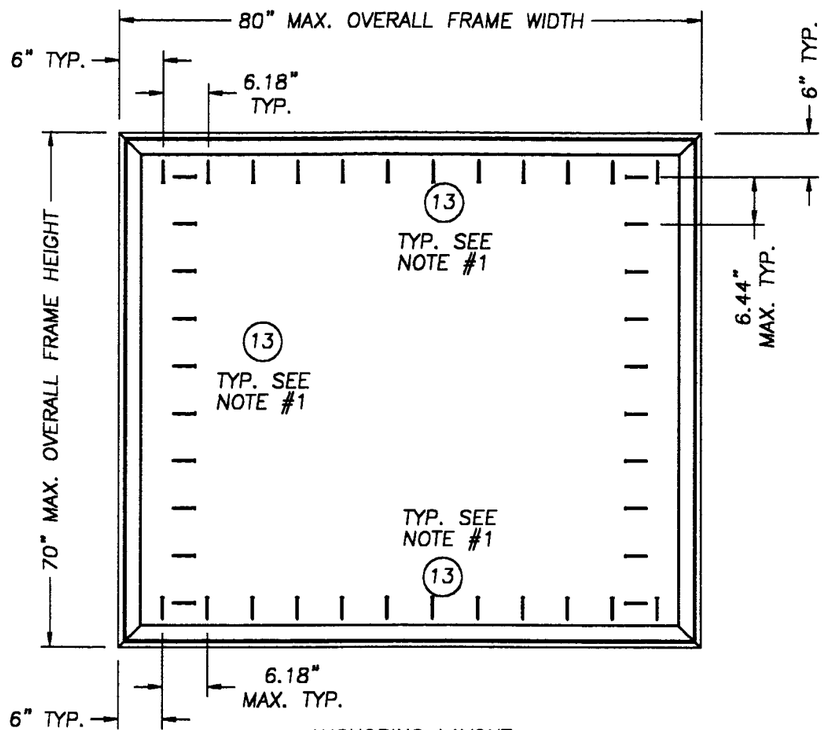

ANCHORING LAYOUT
80" x 70" SINGLE UNIT

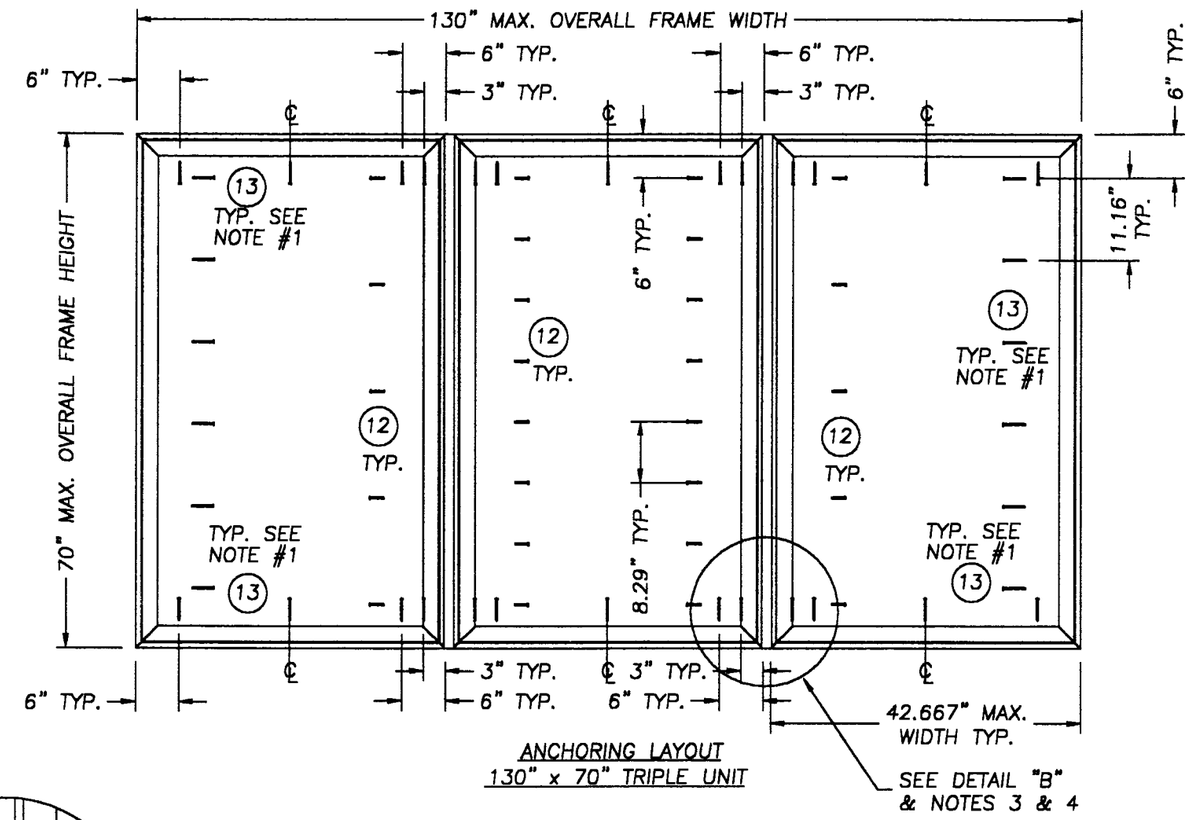

ANCHORING LAYOUT
130" x 70" TRIPLE UNIT

NOTES:

1. ITEM #13 WILL BE REPLACED WITH ITEM #10 WHEN ANCHORING IN MASONRY.
2. THE ANCHOR SPACING AT THE HEADER AND THE SILL ARE THE SAME.
3. THE MAX. INDIVIDUAL UNIT WIDTH IN A MULLED UNIT IS 64". SEE SHT. #1 FOR MAX. TRIBUTARY AREA.
4. WHEN AN INDIVIDUAL UNIT WIDTH IN A MULLED UNIT EXCEEDS 42.667" SCREW SPACING ON THE HORIZONTAL MEMBERS SHALL NOT EXCEED 8.5".

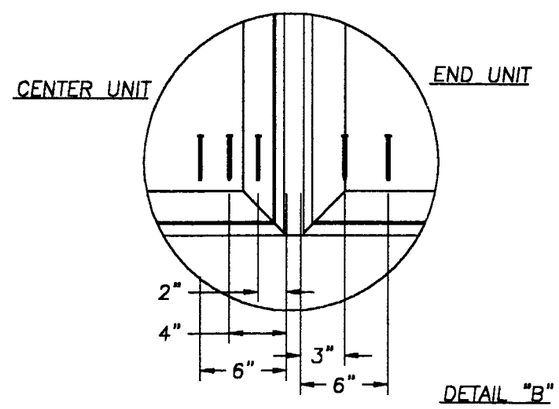

DETAIL "B"

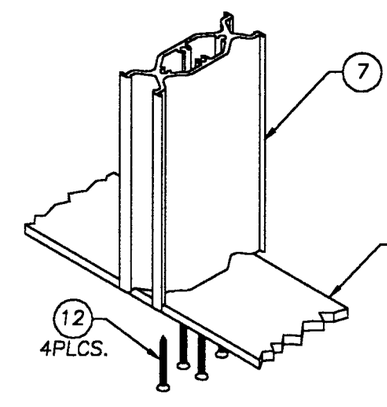

CENTER MULL TO MULL ANCHORING CAP ASSEMBLED VIEW, TYP. @TOP & BOTTOM

SCHÜCO HOMECRAFT, L.P.

240 PANE ROAD
NEWINGTON, CT 06111
PH. 860.666.0505
FAX. 860.666.3351

NO.	DATE	REVISIONS	BY
1.	10/13/00	GENERAL REVISIONS	TJH

PRODUCT:
SCHUCO WELDED FRAME FIXED WINDOWS UP TO 130" x 70" TRIPLE UNIT

PART OR ASSEMBLY:
ANCHORING LAYOUTS

RW BUILDING CONSULTANTS, INC.
813.684.3831

APPROVED AS COMPLYING WITH THE SOUTH FLORIDA BUILDING CODE
DATE November 16, 2000
BY Manuel Perez
PRODUCT CONTROL DIVISION
BUILDING CODE COMPLIANCE OFFICE
ACCEPTANCE NO. 00-0526.03

DATE:	2/27/00
SCALE:	N.T.S.
DWG. BY:	TJH
CHK. BY:	RW
DRAWING NO.:	S-2009
SHEET	5 OF 5