MIAMI-DADE

MIAMI-DADE COUNTY, FLORIDA
METRO-DADE FLAGLER BUILDING

BUILDING CODE COMPLIANCE OFFICE
METRO-DADE FLAGLER BUILDING
140 WEST FLAGLER STREET, SUITE 1603
MIAMI, FLORIDA 33130-1563
(305) 375-2901 FAX (305) 375-2908

CONTRACTOR LICENSING SECTION
(305) 375-2527 FAX (305) 375-2558

CONTRACTOR ENFORCEMENT SECTION
(305) 375-2966 FAX (305) 375-2908

PRODUCT CONTROL DIVISION
(305) 375-2902 FAX (305) 372-6339

PRODUCT CONTROL NOTICE OF ACCEPTANCE

Miami Home Shutters, Inc.
1130 West 23 St.
Hialeah FL 33010

Your application for Product Approval of:
Super 50 Roll-Up Shutter
under Chapter 8 of the Code of Miami-Dade County governing the use of Alternate Materials and Types of Construction, and completely described herein, has been recommended for acceptance by the Miami-Dade County Building Code Compliance Office (BCCO) under the conditions specified herein.

This approval shall not be valid after the expiration date stated below. BCCO reserves the right to secure this product or material at anytime from a jobsite or manufacturer's plant for quality control testing.
If this product or material fails to perform in the approved manner, BCCO may revoke, modify, or suspend the use of such product or material immediately. BCCO reserves the right to revoke this approval, if it is determined BCCO that this product or material fails to meet the requirements of the South Florida Building Code.

The expense of such testing will be incurred by the manufacturer.

Acceptance No.: 00-0526.11

Expires: 07/20/2003

Raul Rodriguez
Chief Product Control Division

THIS IS THE COVERSHEET, SEE ADDITIONAL PAGES FOR SPECIFIC AND GENERAL CONDITIONS

BUILDING CODE & PRODUCT REVIEW COMMITTEE

This application for Product Approval has been reviewed by the BCCO and approved by the Building Code and Product Review Committee to be used in Dade County, Florida under the conditions set forth above.

Francisco J. Quintana, R.A.
Director
Miami-Dade County
Building Code Compliance Office

Approved: 07/20/2000

Internet mail address: postmaster@buildingcodeonline.com **Homepage: http://www.buildingcodeonline.com**

NOTICE OF ACCEPTANCE: SPECIFIC CONDITIONS

1. SCOPE

This approves an aluminum slat roll-up shutter, as described in Section 2 of this Notice of Acceptance, designed to comply with the South Florida Building Code, 1994 Edition for Miami-Dade County (SFBC). For the locations where the pressure requirements, as determined by SFBC Chapter 23, do not exceed the Design Pressure Rating values indicated in the approved drawings.

2. PRODUCT DESCRIPTION

The **Super 50 Aluminum Roll-Up Shutter** and its components shall be constructed in strict compliance with the following documents: Drawing No. 00-917, titled "Super 50 Roll-Up Shutters" prepared by Knezevich & Associates, Inc., dated 11/29/99, with last revision on 03/15/00, sheets 1 through 12 of12. They bear the Miami-Dade County Product Control Approval stamp with the Notice of Acceptance number and approval date by the Miami-Dade County Product Control Division. These documents shall hereinafter be referred to as the approved drawings.

3. LIMITATIONS

3.1 Minimum slat engagement shall be 1.3".

3.2 Minimum separation from interior of slat to glass being protected shall be as shown on sheet 4 of 12.

3.3 The operating mechanism, not part of this approval shall be certified by a recognized testing agency.

3.4 All permanent set components, included but not limited to embedded anchor bolts, threaded cones, metal shields, etc., must be protected against corrosion, contamination and damage at all time.

4. INSTALLATION

The Aluminum Slat Roll-Up Shutter and its components shall be installed in strict compliance with the approved drawings.

5. LABELING

Each shutter shall bear a permanent label with the manufacturer's name or logo, city, state and following statement: "Miami-Dade County Product Control Approved".

6. BUILDING PERMIT REQUIREMENTS

6.1 Application for building permit shall be accompanied by copies of the following:

6.1.1 This Notice of Acceptance.

6.1.2 Duplicate copies of the approved drawings, as identified in Section 2 of this Notice of Acceptance, clearly marked to show the components selected for the proposed installation.

6.1.3 Any other documents required by the Building Official or the South Florida Building Code (SFBC) in order to properly evaluate the installation of this system.

Candido F. Font, P.E., Sr. Product Control Examiner
Product Control Division

Miami Home Shutters, Inc.

ACCEPTANCE No. : 00-0526.11

APPROVED : JUL 2 0 2000

EXPIRES : JUL 2 0 2003

NOTICE OF ACCEPTANCE: STANDARD CONDITIONS

1 Renewal of this Acceptance (approval) shall be considered after a renewal application has been filed and the original submitted documents, including test-supporting data, engineering documents, are no older than eight (8) years.

2. Any and all approved products shall be permanently labeled with the manufacturer's name, city, state, and the following statement: "Miami-Dade County Product Control Approval", or as specifically stated in the specific conditions of this Acceptance.

3. Renewals of Acceptance will not be considered if:
   a. There has been a change in the South Florida Building Code affecting the evaluation of this product and the product is not in compliance with the code changes.
   b. The product is no longer the same product (identical) as the one originally approved.
   c. If the Acceptance holder has not complied with all the requirements of this acceptance, including the correct installation of the product.
   d. The engineer who originally prepared, signed and sealed the required documentation initially submitted, is no longer practicing the engineering profession.

4. Any revision or change in the materials, use, and/or manufacture of the product or process shall automatically be cause for termination of this Acceptance, unless prior written approval has been requested (through the filing of a revision application with appropriate fee) and granted by this office.

5. Any of the following shall also be grounds for removal of this Acceptance:
   a. Unsatisfactory performance of this product or process.
   b. Misuse of this Acceptance as an endorsement of any product, for sales, advertising or any other purposes.

6. The Notice of Acceptance number preceded by the words Miami-Dade County, Florida, and followed by the expiration date may be displayed in advertising literature. If any portion of the Notice of Acceptance is displayed, then it shall be done in its entirety.

7. A copy of this Acceptance as well as approved drawings and other documents, where it applies, shall be provided to the user by the manufacturer or its distributors and shall be available for inspection at the job site at all time. The engineer need not reseal the copies.

8. Failure to comply with any section of this Acceptance shall be cause for termination and removal of Acceptance.

9. This Notice of Acceptance consists of pages 1, 2 and this last page 3.

END OF THIS ACCEPTANCE

Candido F. Font, P.E., Sr. Product Control Examiner
Product Control Division

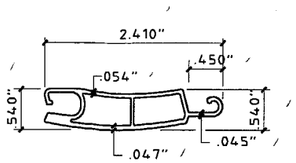

1 ROLL-UP SLAT
HALF SIZE

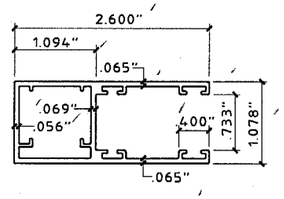

2 SIDE RAIL
HALF SIZE

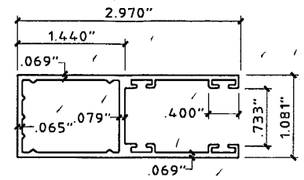

3 ALT. SIDE RAIL
HALF SIZE

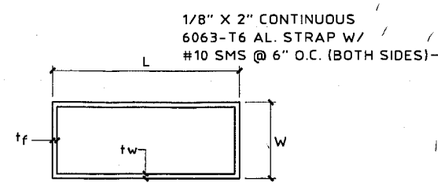

5 7 9 10 12 13

BOX BEAM (TYP. A)
HALF SIZE

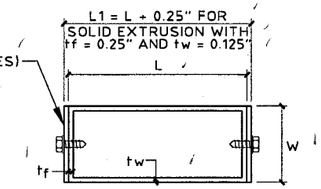

4 14 BOX BEAM WITH TWO STRAPS (TYPE B)
HALF SIZE

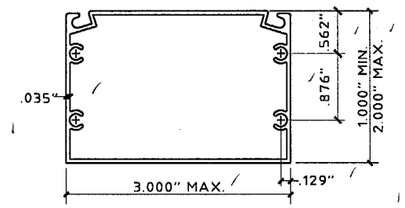

15 2" x 3" BUILD-OUT (TYPE C)
HALF SIZE

INDEX

SHEET NO.	DESCRIPTION
1	GENERAL NOTES - COMPONENTS
2	SIDE RAIL CONNECTIONS & SECTIONS
3	TYPICAL ELEVATIONS & SECTIONS
4	SLAT SPAN SCHEDULES B-1, B-2, B-3 & B-4
5	HEADER - DRUM SUPPORT ANCHOR SCHEDULE B-5
6	ANCHOR SCHEDULES C, D, E & F
7	NEGATIVE (EXTERIOR) STORM BAR SCHEDULE G
8	POSITIVE (INTERIOR) STORM BAR SCHEDULE H
9	PERMANENT MULLION SCHEDULE I
10	HEADER SCHEDULE J (40 P.S.F. TO 90 P.S.F. DESIGN LOADS)
11	HEADER SCHEDULE J (100 P.S.F. TO 150 P.S.F. DESIGN LOADS)
12	HEADER SCHEDULE J (160 P.S.F. TO 220 P.S.F. DESIGN LOADS)

STORM BAR, HEADER, MULLION, BUILD-OUT AND ANGLE MEMBER - SCHEDULE A

MEMBER MARK	MEMBER TYPE	W (INCHES)	L (INCHES)	Tf (INCHES)	Tw (INCHES)	1" x 1/8" ALUM. STRAP REQUIRED
4	B	1	3	.125	.125	YES
5	A	2	3	.125	.125	
7	A	2	4	.125	.125	
9	A	2	4	.250	.250	
10	A	2	5	.125	.125	
12	A	2	6	.125	.125	
13	A	2	7	.125	.125	
14	B	1	2	.125	.125	YES
15	C	2	3	.050	.050	
16	ANGLE	2 MIN.	2 MIN.	.125	.125	
17	ANGLE	2 MIN.	2 MIN.	.250	.250	
18	ANGLE	2 MIN.	2 MIN.	.060	.060	

NOTES:

1. THIS ROLL-UP SHUTTER SYSTEM IS DESIGNED IN ACCORDANCE WITH THE SOUTH FLORIDA BUILDING CODE, 1994 EDITION FOR MIAMI-DADE COUNTY.
2. ALL EXTRUSIONS SHOWN SHALL BE 6063-T6 ALUMINUM ALLOY, U.O.N.
3. EACH SHUTTER ASSEMBLY SHALL BE PERMANENTLY LABELED ON HOOD OR GUIDE RAIL AS FOLLOWS:
   MIAMI HOME SHUTTERS, INC.
   HIALEAH, FLORIDA
   MIAMI-DADE COUNTY PRODUCT CONTROL APPROVED
4. ALL BOLTS AND WASHERS SHALL BE GALVANIZED OR STAINLESS STEEL W/ A MIN. Fy = 33 KSI. POP RIVETS SHALL BE 3/16"ø 5052 ALUM. ALLOY
5. MATERIAL SPECIFICATIONS NOTED HEREIN ARE THE MANUFACTURER'S REPRESENTATION OF MATERIALS TO BE USED IN PRODUCT MANUFACTORING.
6. THE DETAILS AND SPECIFICATIONS SHOWN HEREIN REPRESENT THE PRODUCTS TESTED FOR IMPACT AND UNIFORM STATIC AIR PRESSURE IN CONFORMANCE W/ THE ABOVE STANDARDS.
   DESIGN IS BASED ON CONSTRUCTION TESTING CORP. (C.T.C.), MIAMI, FLORIDA TEST REPORT No. 99-037.
7. THE PERMIT HOLDER SHALL VERIFY THE ADEQUACY OF THE EXISTING STRUCTURE TO SUSTAIN THE NEW SUPERIMPOSED LOADS AND TO VERIFY ALL DIMENSIONS AT THE JOB SITE BEFORE COMMENCING WITH THE WORK.
8. BUILDING PERMIT IS REQUIRED FOR THE INSTALLATION OF STORM SHUTTERS ON A STRUCTURE AND SHALL BE APPLIED FOR IN ACCORDANCE WITH FLORIDA STATUTES.

INSTRUCTIONS:

DETERMINE WIND LOAD ON OPENING TO BE COVERED WITH A ROLL UP SHUTTER.

DETERMINE THE SLAT SPAN THAT YOU WILL NEED TO COVER THE OPENING.

DETERMINE IF YOU WILL NEED A SINGLE SPAN, DOUBLE SPAN OR THREE OR MORE SPANS TO COVER THE OPENING.

SINGLE AND MULTIPLE SLAT SPANS
FOR A SINGLE AND MULTIPLE SPAN, SEE SCHEDULES B-1, B-2, B-3 & B-4, ALLOWABLE SLAT SPANS ON PAGE 4. LOCATE THE DESIGN WIND LOAD, AND THEN READ THE ALLOWABLE SLAT SPAN.

STORM BARS
FOR MULTIPLE SPANS, UTILIZING STORM BARS, SEE SCHEDULES G & H ON PAGE 7 & 8 FOR POSITIVE & NEGATIVE DESIGN WIND LOADS AND STORM BARS. THE LAST ROW OF EACH DESIGN LOAD INDICATES THE MAX. ALLOWABLE SLAT SPAN. UTILIZING THAT OR A LESSER SLAT SPAN, READ SCHEDULE HORIZONTALLY FROM LEFT TO RIGHT, UNTIL YOU FIND A STORM BAR SIZE AND HEIGHT THAT FITS THE OPENING.

MULLIONS
FOR ALLOWABLE SLAT SPANS, UTILIZING A PERMANENT MULLION, SEE SCHEDULE I ON PAGE 9. SELECT YOUR DESIGN WIND LOAD. THE LAST ROW OF EACH DESIGN LOAD INDICATES THE MAX. ALLOWABLE SLAT SPAN. UTILIZING THAT OR A LESSER SPAN, READ FROM LEFT TO RIGHT AND SELECT THE PERMANENT MULLION THAT HAS SUFFICIENT HEIGHT FOR YOUR OPENING.

FOR PROPER CONNECTIONS AT THE TOP AND BOTTOM OF STORM BARS AND MULLIONS, SEE SCHEDULE C OR D, PAGE 6. EACH STORM BAR AND MULLION SCHEDULE HAS REACTION LOADS INDICATED ON THE SCHEDULE TO THE RIGHT OF THE ALLOWABLE SPAN. TAKE THAT NUMBER AND ENTER SCHEDULE "C" FOR A TENSION CONNECTION OR SCHEDULE "D" FOR A SHEAR CONNECTION TO DETERMINE THE TYPE AND SIZE OF ANCHOR AS WELL AS THE EMBEDMENT INTO CONCRETE, CONCRETE BLOCK OR WOOD. THIS SCHEDULE WILL ALSO GIVE YOU THE SIZE AND THICKNESS OF THE ALUMINUM ANGLES TO BE USED AS WELL AS THE TEK SCREW ATTACHMENT OF THE ANGLE TO THE STORM BAR OR MULLION.

HEADERS
HEADERS FOR STORM BARS CAN BE FOUND IN SCHEDULE J ON PAGES 10, 11 & 12 SELECT THE DESIGN WIND LOAD AND ENTER SCHEDULE J. NOTE THAT THE MAX. ALLOWABLE OPENING HEIGHT IS SHOWN AT THE TOP OF THE SCHEDULE. READ ACROSS FROM LEFT TO RIGHT FROM YOUR DESIGN WIND LOAD UNTIL YOU INTERSECT THE COLUMN THAT SHOWS A HEIGHT EQUAL TO OR GREATER THAN YOUR SELECTED OPENING HEIGHT. SEVERAL STORM BAR SIZES ARE IN THE SCHEDULE. YOU MAY CHOOSE FROM THE COLUMN THAT BEST MEETS YOUR REQUIREMENTS.

CONNECTIONS FOR HEADERS MAY ALSO BE FOUND IN SCHEDULES C AND D (SEE REACTIONS FOR HEADERS IN HEADER REACTION SCHEDULE E, PAGE 6.

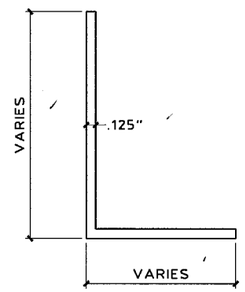

16 ANGLE
HALF SIZE

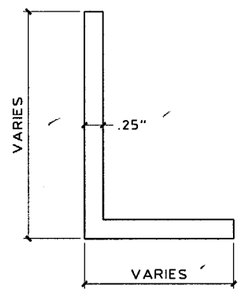

17 ANGLE
HALF SIZE

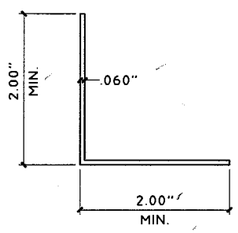

18 ANGLE
HALF SIZE

APPROVED AS COMPLYING WITH THE
SOUTH FLORIDA BUILDING CODE
DATE July 28, 2000
BY
PRODUCT CONTROL DIVISION
BUILDING CODE COMPLIANCE OFFICE
ACCEPTANCE NO. 00-0526.11

KNEZEVICH & ASSOCIATES, INC.
CONSULTING ENGINEERS • PRODUCT TESTING
1260 N. UNIVERSITY DRIVE, SUITE 180 • FORT LAUDERDALE, FL 33322
TEL: (954) 382-2800 • FAX: (954) 382-2989 • FLORIDA COA #3205
WEBSITE: WWW.KNEZEVICH.COM • E-MAIL: KA@KNEZEVICH.COM

COPYRIGHT © 2000 KNEZEVICH & ASSOCIATES, INC.

S-50 SYSTEM LICENSED BY SOUTHERN SHUTTER ASSOCIATION

SUPER 50
ROLL-UP SHUTTER
MIAMI HOME SHUTTERS INC.
1130 West 23rd Street
Hialeah, Florida 33010
Tel: (305) 885-4488 • Fax: (305) 887-4488

revisions

no	date	by	description
1	03/15/00	VJK	COUNTY COMMENTS

SSA I.D.# 05230099349D

V.J. KNEZEVICH
PROFESSIONAL ENGINEER
FL License No:
PE 0010983

MAY 24 2000

date 11/29/99	
scale AS NOTED	drawn by MC
design by VJK	checked by VJK
drawing no. 00-917	
sheet 1 of 12	

00-05 26.11

05/23/00 10:44

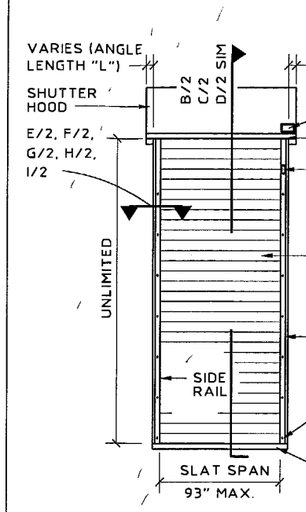

A ELEVATION OF SINGLE SPAN CONDITION
N.T.S.

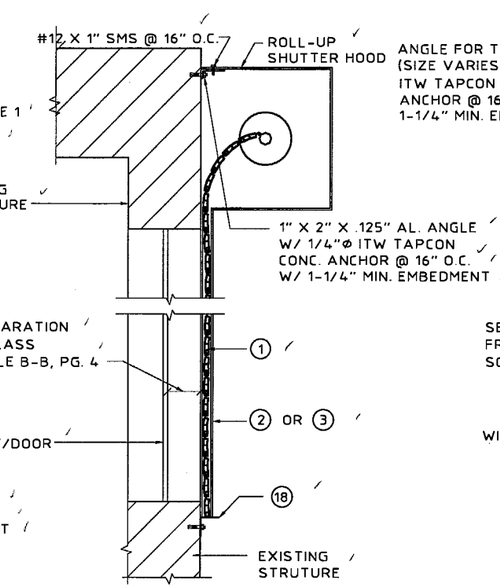

B WALL MOUNT SECTION
SCALE : 3/4" = 1'-0"

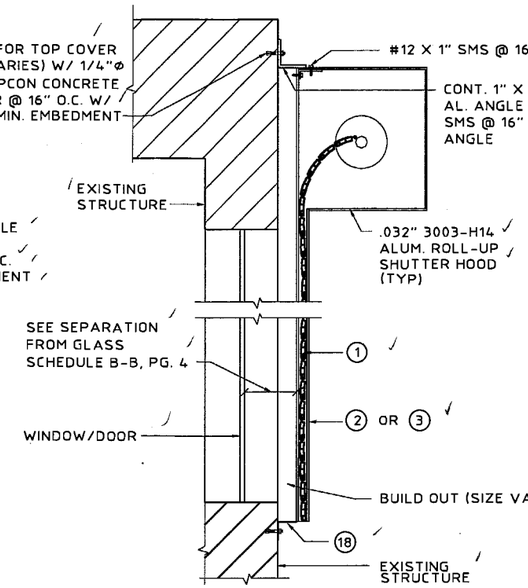

C BUILD OUT SECTION
SCALE : 3/4" = 1'-0"

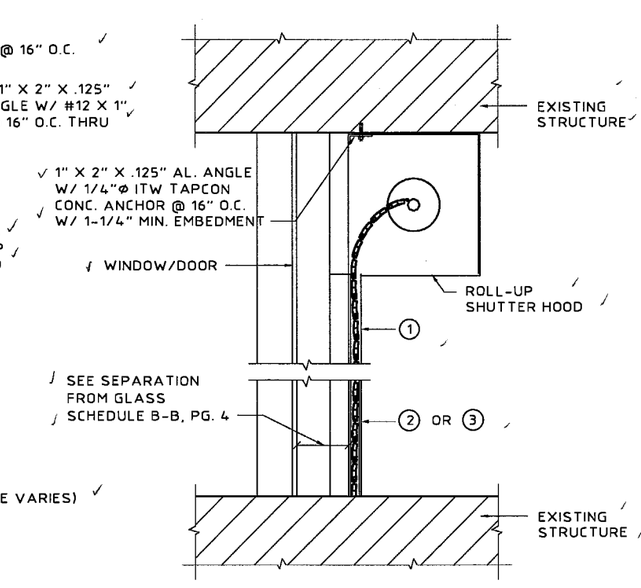

D INSIDE MOUNT SECTION
SCALE : 3/4" = 1'-0"

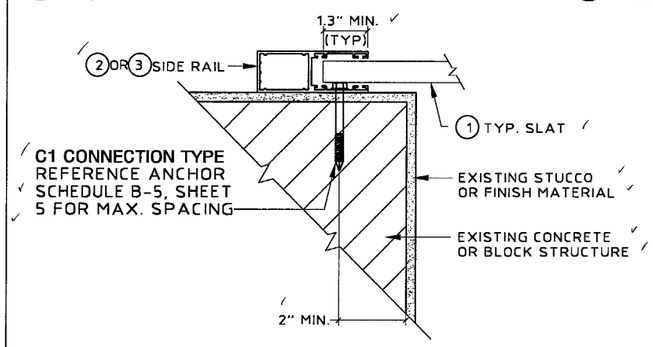

E WALL MOUNT (PLAN)
SCALE : 3" = 1'-0"

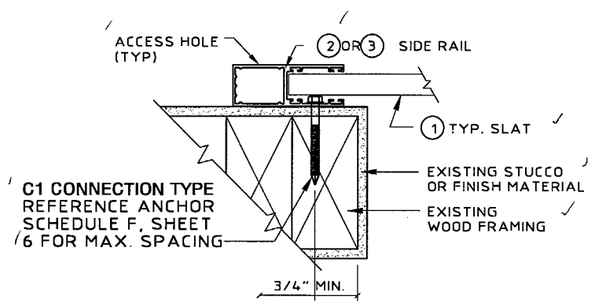

F WOOD FRAME WALL MOUNT (PLAN)
SCALE : 3" = 1'-0"

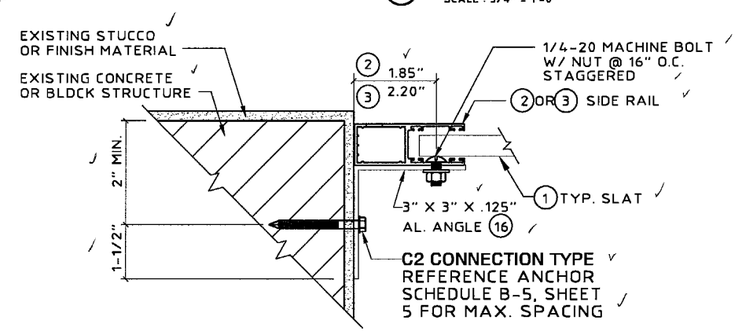

G INSIDE MOUNT (PLAN)
SCALE : 3" = 1'-0"

ANCHOR SPACING OF C2 ON SCHEDULE B5 ARE CALCULATED FOR A 3"x3"x1/8" ANGLE AS SHOWN. OTHER SIZES OR CHANGES ON ANCHOR LOCATION MUST BE ENGINEERED SEPERATLY AND ARE NOT PART OF THIS APPROVAL.

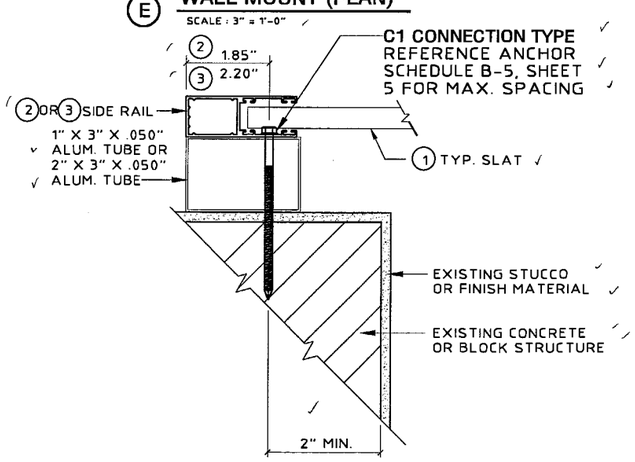

H BUILD-OUT MOUNT (PLAN)
SCALE : 3" = 1'-0"

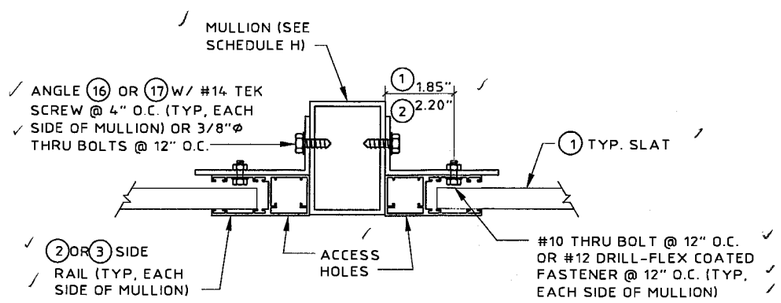

J SIDE RAIL TO MULLION DETAILS
SCALE : 3" = 1'-0"

APPROVED AS COMPLYING WITH THE SOUTH FLORIDA BUILDING CODE
DATE July 20, 2000
BY
PRODUCT CONTROL DIVISION
BUILDING CODE COMPLIANCE OFFICE
ACCEPTANCE NO. 00-0526.11

KNEZEVICH & ASSOCIATES, INC.
CONSULTING ENGINEERS • PRODUCT TESTING
1260 N. UNIVERSITY DRIVE, SUITE 180 • FORT LAUDERDALE, FL 33322
TEL: (954) 382-2800 • FAX: (954) 382-2989 • FLORIDA COA #3205
WEBSITE: WWW.KNEZEVICH.COM • E-MAIL: KA@KNEZEVICH.COM
COPYRIGHT © 2000 KNEZEVICH & ASSOCIATES, INC.
S-50 SYSTEM LICENSED BY SOUTHERN SHUTTER ASSOCIATION

SUPER 50
ROLL-UP SHUTTER
MIAMI HOME SHUTTERS INC.
1130 West 23rd Street
Hialeah, Florida 33010
Tel: (305) 885-4488 • Fax: (305) 887-4488

revisions

no	date	by	description
1	03/15/00	VJK	COUNTY COMMENTS

SSA I.D.# 0523009349D

V.J. KNEZEVICH
PROFESSIONAL ENGINEER
FL License No: PE 0010983

MAY 24 2000

date 11/29/99	
scale AS NOTED	drawn by MC
design by VJK	checked by VJK

drawing no. 00-917

sheet 2 of 12

05/23/00 10:44

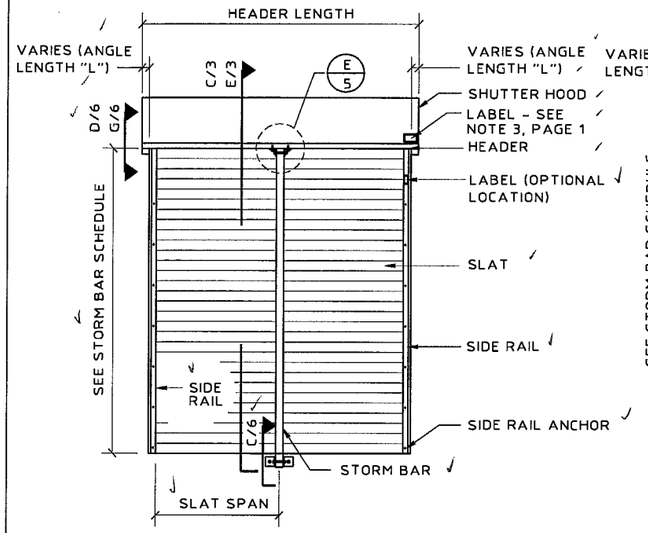

Ⓐ **WALL MOUNT & BUILD OUT ELEVATION**

N.T.S.

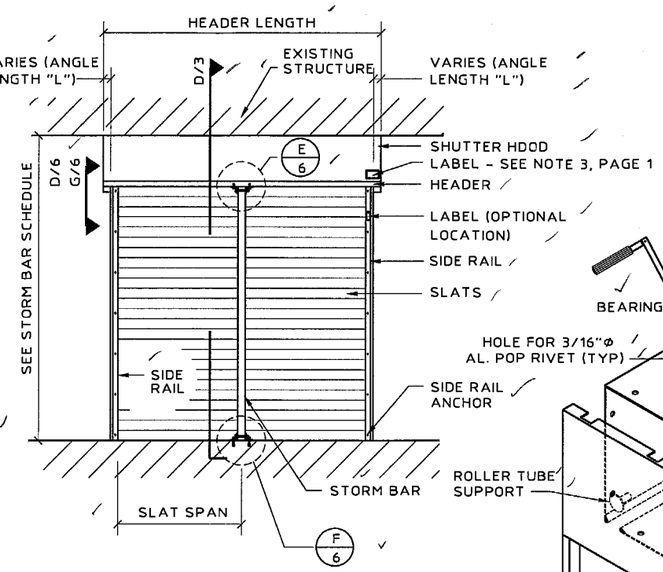

Ⓑ **INSIDE MOUNT ELEVATION**

N.T.S.

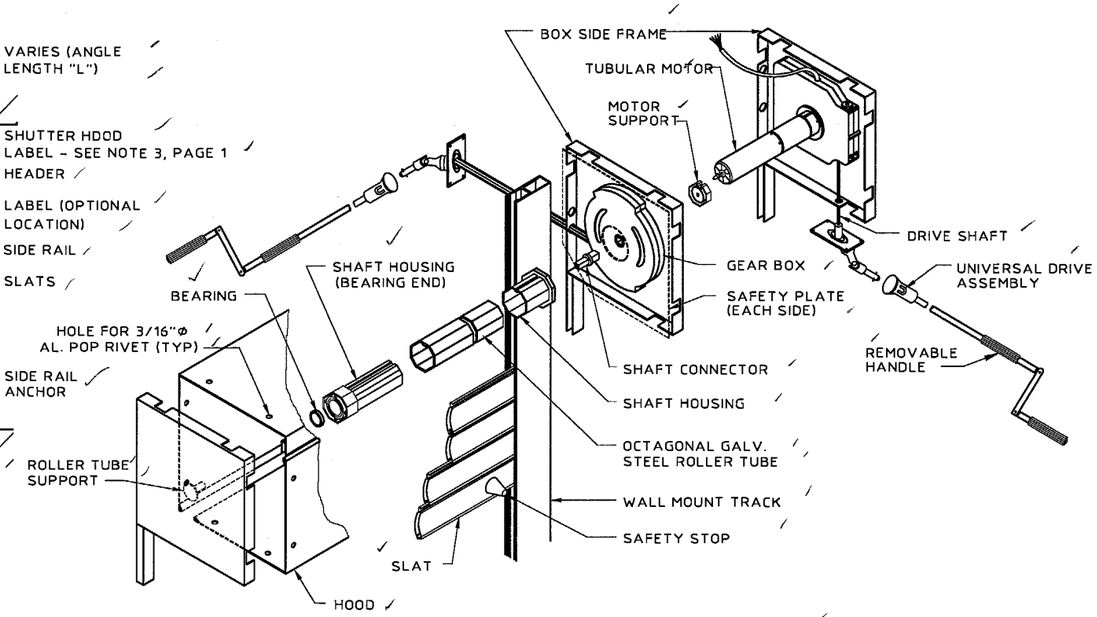

ISOMETRIC OF CAST HEADER ASSEMBLY

N.T.S.

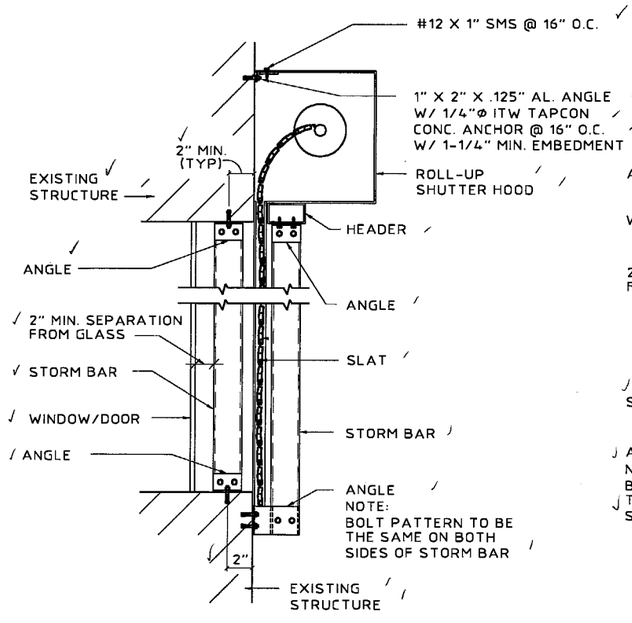

Ⓒ **WALL MOUNT SECTION W/ STORM BAR**

SCALE : 3/4" = 1'-0"

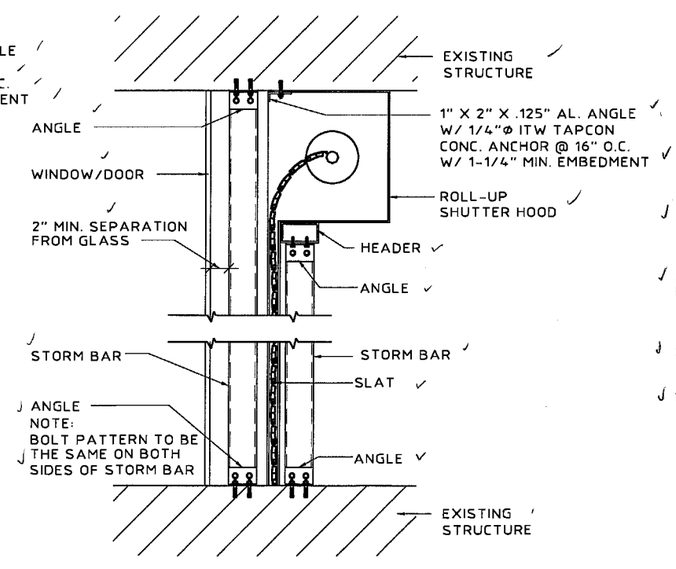

Ⓓ **INSIDE MOUNT SECTION W/ STORM BAR**

SCALE : 3/4" = 1'-0"

✖ 1-1/2" SEPARATION MAY BE USED WHEN POSITIVE LOADED STORM BARS FROM SCHEDULE G ARE USED

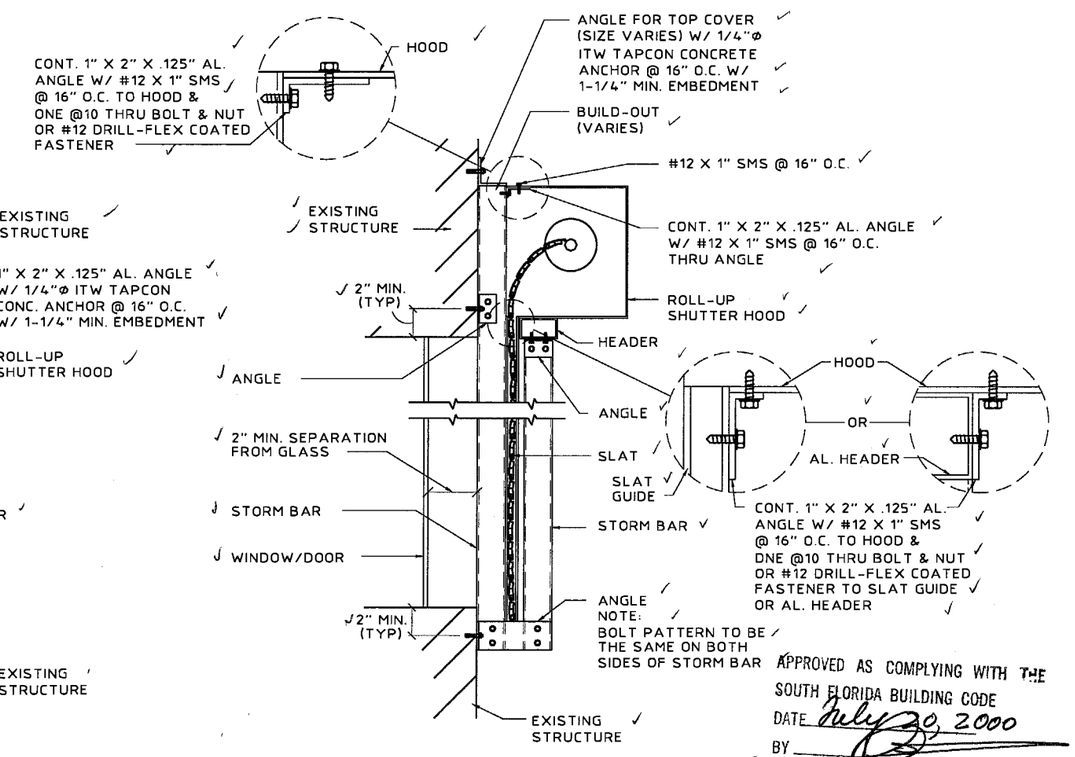

Ⓔ **BUILD-OUT SECTION W/ STORM BAR**

SCALE : 3/4" = 1'-0"

APPROVED AS COMPLYING WITH THE SOUTH FLORIDA BUILDING CODE
DATE July 20, 2000
BY
PRODUCT CONTROL DIVISION
BUILDING CODE COMPLIANCE OFFICE
ACCEPTANCE NO. 00-0526.11

KNEZEVICH & ASSOCIATES, INC.
CONSULTING ENGINEERS • PRODUCT TESTING
1260 N. UNIVERSITY DRIVE, SUITE 180 • FORT LAUDERDALE, FL 33322
TEL: (954) 382-2800 • FAX: (954) 382-2989 • FLORIDA COA #3205
WEBSITE: WWW.KNEZEVICH.COM • E-MAIL: KA@KNEZEVICH.COM

COPYRIGHT © 2000 KNEZEVICH & ASSOCIATES, INC.

S-50 SYSTEM LICENSED BY SOUTHERN SHUTTER ASSOCIATION

SUPER 50
ROLL-UP SHUTTER

MIAMI HOME SHUTTERS INC.
1130 West 23rd Street
Hialeah, Florida 33010
Tel: (305) 885-4488 • Fax: (305) 887-4488

revisions

no	date	by	description
1	03/15/00	VJK	COUNTY COMMENTS

SSA I.D. # 05230099349D

V.J. KNEZEVICH
PROFESSIONAL ENGINEER
FL License No: PE 0070983

MAY 24 2000

date 11/29/99	
scale AS NOTED	drawn by MC
design by VJK	checked by VJK

drawing no. 00-917

sheet 3 of 12

05/23/00 10:44

TABLE 1 — SLAT - SINGLE SPAN SCHEDULE B-1

CONTRACTOR / INSTALLER TO UTILIZE SMALLEST OF POSITIVE LOAD SPAN AND NEGATIVE LOAD SPAN FOR EACH OPENING

DESIGN WIND LOAD (P.S.F.)	SPANS FOR POSITIVE LOADS TOTAL SLAT SPAN (FT. - IN.)	SPANS FOR NEGATIVE LOADS TOTAL SLAT SPAN (FT. - IN.)
40.0	6-10	7-7
50.0	6-6	7-1
60.0	6-2	6-8
70.0	5-11	6-4
80.0	5-9	6-0
90.0	5-7	5-10
100.0	5-5	5-7
110.0	5-4	5-5
115.0	5-3	5-4
120.0	5-2	5-3
130.0	5-1	5-2
140.0	5-0	5-0
150.0	4-9	4-9
160.0	4-6	4-6
170.0	4-3	4-3
180.0	4-0	4-0
190.0	3-9	3-9
200.0	3-7	3-7
210.0	3-5	3-5
220.0	3-3	3-3

SINGLE SPAN

TABLE 2 — SLAT - DOUBLE SPAN SCHEDULE B-2

CONTRACTOR / INSTALLER TO UTILIZE SMALLEST OF POSITIVE LOAD SPAN AND NEGATIVE LOAD SPAN FOR EACH OPENING

DESIGN WIND LOAD (P.S.F.)	SPANS FOR POSITIVE LOADS TOTAL SLAT SPAN (FT. - IN.)	SPANS FOR NEGATIVE LOADS TOTAL SLAT SPAN (FT. - IN.)
40.0	8-6	10-2
50.0	8-1	9-1
60.0	7-9	8-4
70.0	7-5	7-8
80.0	7-2	7-2
90.0	6-9	6-9
100.0	6-5	6-5
110.0	6-2	6-2
115.0	6-0	6-0
120.0	5-10	5-10
130.0	5-8	5-8
140.0	5-5	5-5
150.0	5-3	5-3
160.0	5-1	5-1
170.0	4-11	4-11
180.0	4-9	4-9
190.0	4-8	4-8
200.0	4-6	4-6
210.0	4-5	4-5
220.0	4-4	4-4

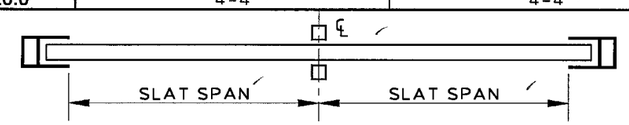

DOUBLE SPAN

TABLE 3 — SLAT - MORE THAN TWO SPAN SCHEDULE B-3

CONTRACTOR / INSTALLER TO UTILIZE SMALLEST OF POSITIVE LOAD SPAN AND NEGATIVE LOAD SPAN FOR EACH OPENING

DESIGN WIND LOAD (P.S.F.)	SPANS FOR POSITIVE LOADS TOTAL SLAT SPAN (FT. - IN.)	SPANS FOR NEGATIVE LOADS TOTAL SLAT SPAN (FT. - IN.)
40.0	8-0	9-5
50.0	7-7	8-9
60.0	7-3	8-3
70.0	7-0	7-10
80.0	6-9	7-6
90.0	6-7	7-2
100.0	6-5	6-11
110.0	6-3	6-9
115.0	6-2	6-7
120.0	6-1	6-6
130.0	6-0	6-4
140.0	5-10	6-1
150.0	5-9	5-10
160.0	5-7	5-7
170.0	5-3	5-3
180.0	5-0	5-0
190.0	4-9	4-9
200.0	4-6	4-6
210.0	4-3	4-3
220.0	4-1	4-1

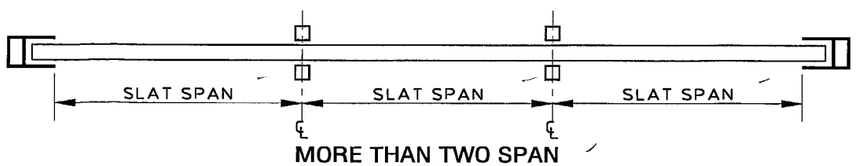

MORE THAN TWO SPAN

TABLE 4 — MINIMUM SEPARATION FROM GLASS SCHEDULE B-4

POSITIVE DESIGN WIND LOAD (P.S.F.)	ACTUAL SHUTTER SPAN (L) (FT. - IN.)	MINIMUM SEPARATION FOR INSTALLATIONS LESS THAN OR EQUAL TO 30'-0" ABOVE GRADE (INCHES)	MINIMUM SEPARATION FOR INSTALLATIONS GREATER THAN 30'-0" ABOVE GRADE (INCHES)
30.0	5-9	2-1/4	2-1/4
	6-3	2-3/8	2
	6-8	2-5/8	2-3/8
	7-9	3-1/2	3-1/2
	9-2	5-3/4	5-3/4
40.0	5-9	2-1/4	2
	6-3	2-3/8	2-3/8
	6-8	2-3/4	2-3/4
	7-9	4-1/4	4-1/4
	8-7	5-3/4	5-3/4
50.0	5-9	2-1/4	2-1/4
	6-3	2-3/4	2-3/4
	6-8	3-1/4	3-1/4
	8-1	5-3/4	5-3/4
60.0	5-9	2-1/2	2-1/2
	6-3	3	3
	6-8	3-5/8	3-5/8
	7-9	5-3/4	5-3/4
70.0	5-9	2-3/4	2-3/4
	6-3	3-3/8	3-3/8
	6-8	4	4
	7-6	5-3/4	5-3/4
80.0	5-9	3	3
	6-3	3-3/4	3-3/4
	6-8	4-1/2	4-1/2
	7-2	5-3/4	5-3/4
90.0	5-9	3-1/4	3-1/4
	6-3	4	4
	6-8	5	5
	7	5-3/4	5-3/4
100.0	5-9	3-1/2	3-1/2
	6-3	4-3/8	4-3/8
	6-10	5-3/4	5-3/4

NOTE: INTERPOLATE FOR SLAT SPANS AND DEFLECTION BETWEEN THOSE SHOWN.

APPROVED AS COMPLYING WITH THE SOUTH FLORIDA BUILDING CODE
DATE July 20, 2000
BY
PRODUCT CONTROL DIVISION
BUILDING CODE COMPLIANCE OFFICE
ACCEPTANCE NO. 00-0526.11

KNEZEVICH & ASSOCIATES, INC.
CONSULTING ENGINEERS • PRODUCT TESTING
1260 N. UNIVERSITY DRIVE, SUITE 180 • FORT LAUDERDALE, FL 33322
TEL: (954) 382-2800 • FAX: (954) 382-2989 • FLORIDA COA #3205
WEBSITE: WWW.KNEZEVICH.COM • E-MAIL: KA@KNEZEVICH.COM

COPYRIGHT © 2000 KNEZEVICH & ASSOCIATES, INC.

S-50 SYSTEM LICENSED BY SOUTHERN SHUTTER ASSOCIATION

SUPER 50 ROLL-UP SHUTTER
MIAMI HOME SHUTTERS INC.
1130 West 23rd Street
Hialeah, Florida 33010
Tel: (305) 885-4488 • Fax: (305) 887-4488

revisions

no	date	by	description
1	03/15/00	VJK	COUNTY COMMENTS

SSA I.D.# 0523009934 9D

V.J. KNEZEVICH
PROFESSIONAL ENGINEER
FL License No: PE 0010983

MAY 24 2000

date 11/29/99	
scale AS NOTED	drawn by MC
design by VJK	checked by VJK

drawing no. 00-917

sheet 4 of 12

05/23/00 10:45

ANCHOR SCHEDULE B-5

FASTENER MAX. SPACING (IN.) REQUIRED FOR VARIOUS DESIGN LOADS AND SPANS

EXISTING STRUCTURE	ANCHOR TYPE (NOTE: HEAD STYLE MAY BE PHILLIPS, FLAT HEAD, HEX HEAD OR PAN HEAD (HEAD = 0.425"Φ MIN.))	LOAD (W) P.S.F. MAX. (SEE NOTE 1)	MIN. 2" EDGE DISTANCE: SPANS UP TO 4'-0" (SEE NOTE 1) CONN. TYPE (SEE NOTE 3) C1	C2	SPANS UP TO 6'-0" (SEE NOTE 1) CONN. TYPE (SEE NOTE 3) C1	C2	SPANS UP TO 8'-0" (SEE NOTE 1) CONN. TYPE (SEE NOTE 3) C1	C2	MIN. 3" EDGE DISTANCE: SPANS UP TO 4'-0" (SEE NOTE 1) CONN. TYPE (SEE NOTE 3) C1	C2	SPANS UP TO 6'-0" (SEE NOTE 1) CONN. TYPE (SEE NOTE 3) C1	C2	SPANS UP TO 8'-0" (SEE NOTE 1) CONN. TYPE (SEE NOTE 3) C1	C2
CONCRETE	1/4"Φ ITW BUILDEX TAPCON W/ 1-3/4" MIN. EMBEDMENT (MIN. 3,145 P.S.I. CONCRETE)	48.0	12	12	12	12	12	11	12	12	12	12	12	12
		62.0	12	12	12	12	12	9	12	12	12	12	12	11
		72.0	12	12	12	10	12	7	12	12	12	12	12	9
		92.0	12	12	12	8	12	6	12	12	12	10	12	7
		220.0	12	6	12	6	12	6	12	8	12	7	12	7
	1/4" Φ ELCO TEXTRON CRETE-FLEX W/ 1-3/4" MIN. EMBEDMENT (MIN. 3,300 P.S.I. CONCRETE)	48.0	12	12	12	12	12	12	12	12	12	12	12	12
		62.0	12	12	12	12	12	12	12	12	12	12	12	12
		72.0	12	12	12	12	12	11	12	12	12	12	12	12
		92.0	12	12	12	11	12	9	12	12	12	12	12	11
		220.0	12	9	12	9	12	9	12	11	12	11	12	11
HOLLOW CONCRETE BLOCK	1/4"Φ ITW BUILDEX TAPCON W/ 1-1/4" MIN. EMBEDMENT	48.0	12	10	10	6	7	5	12	12	12	8	9	6
		62.0	11	7	7	5	5	3	12	9	9	6	7	4
		72.0	10	6	6	4	5	3	12	8	8	5	6	4
		92.0	7	5	5	3	4		9	6	6	4	5	3
		220.0	4		4		4		5	3	5	3	5	3
	1/4" Φ ELCO TEXTRON CRETE-FLEX W/ 1-1/4" MIN. EMBEDMENT	48.0	12	12	12	11	12	8	12	12	12	12	12	10
		62.0	12	12	12	8	11	6	12	12	12	10	12	8
		72.0	12	11	12	7	10	5	12	12	12	9	12	7
		92.0	12	8	10	6	7	4	12	11	12	7	9	5
		220.0	7	4	7	4	7	4	9	5	9	5	9	5

APPROVED AS COMPLYING WITH THE SOUTH FLORIDA BUILDING CODE
DATE July 20, 2000
BY
PRODUCT CONTROL DIVISION
BUILDING CODE COMPLIANCE OFFICE
ACCEPTANCE NO. 00-0524.11

ANCHOR NOTES:

1. SPANS AND LOADS SHOWN HERE ARE FOR DETERMINING ANCHOR SPACING ONLY. ALLOWABLE STORM PANEL SPANS FOR SPECIFIC LOADS MUST BE LIMITED TO THOSE SHOWN IN TABLE 1, SHEET 7.
2. ENTER ANCHOR SCHEDULE BASED ON THE EXISTING STRUCTURE MATERIAL, ANCHOR TYPE AND EDGE DISTANCE. SELECT DESIGN LOAD GREATER THAN OR EQUAL TO NEGATIVE DESIGN LOAD ON SHUTTER AND SELECT SPAN GREATER THAN OR EQUAL TO SHUTTER SPAN.
3. SEE MOUNTING SECTION DETAILS FOR IDENTIFICATION OF CONNECTION TYPE.
4. EXISTING STRUCTURE MAY BE CONCRETE, HOLLOW BLOCK OR WOOD FRAMING. REFERENCE ANCHOR SCHEDULE FOR PROPER ANCHOR TYPE BASED ON TYPE OF EXISTING STRUCTURE.
5. ANCHORS SHALL BE INSTALLED IN ACCORDANCE WITH MANUFACTURERS' RECOMMENDATIONS.
6. MINIMUM EMBEDMENT AND EDGE DISTANCE EXCLUDES WALL FINISH OR STUCCO.
7. WHERE EXISTING STRUCTURE IS WOOD FRAMING, WOOD FRAMING CONDITIONS VARY. FIELD VERIFY THAT FASTENERS ARE INTO ADEQUATE WOOD FRAMING MEMBERS, NOT PLYWOOD. FASTENING TO PLYWOOD IS ACCEPTABLE ONLY FOR SIDE CLOSURE PIECES.
8. WHERE LAG SCREWS FASTEN TO NARROW FACE OF STUD FRAMING, FASTENER SHALL BE LOCATED IN CENTER OF NOMINAL 2" x 4" (MIN.) WOOD STUD. 3/4" EDGE DISTANCE IS ACCEPTABLE FOR WOOD FRAMING. WOOD STUD SHALL BE "SOUTHERN PINE" G=0.55 OR GREATER DENSITY. LAG SCREWS SHALL HAVE PHILLIPS PAN HEAD OR HEX HEAD.
9. MACHINE SCREWS SHALL HAVE MINIMUM OF 1/2" ENGAGEMENT OF THREADS IN BASE ANCHOR AND MAY HAVE EITHER A PAN HEAD, TRUSS HEAD, OR WAFER HEAD (SIDEWALK BOLT), U.O.N.
10. ▨ DESIGNATES ANCHOR CONDITIONS WHICH ARE NOT ACCEPTABLE USES.
11. * DESIGNATES ANCHORS WHICH ARE REMOVABLE BY REMOVING MACHINE SCREW, NUT OR WASHERED WINGNUT.
12. FOR LOADS GREATER THAN THOSE SPECIFIED IN THE ANCHOR SCHEDULE, SITE SPECIFIC FASTENER ANALYSIS SHALL BE PREPARED BY KNEZEVICH & ASSOCIATES, INC.

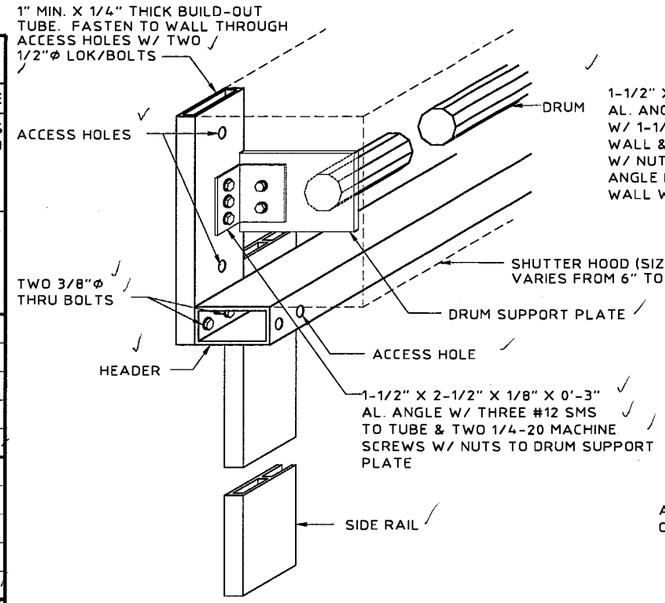

Ⓕ DRUM SUPPORT & HEADER TO BUILD-OUT DETAIL
SCALE : 1-1/2" = 1'-0"

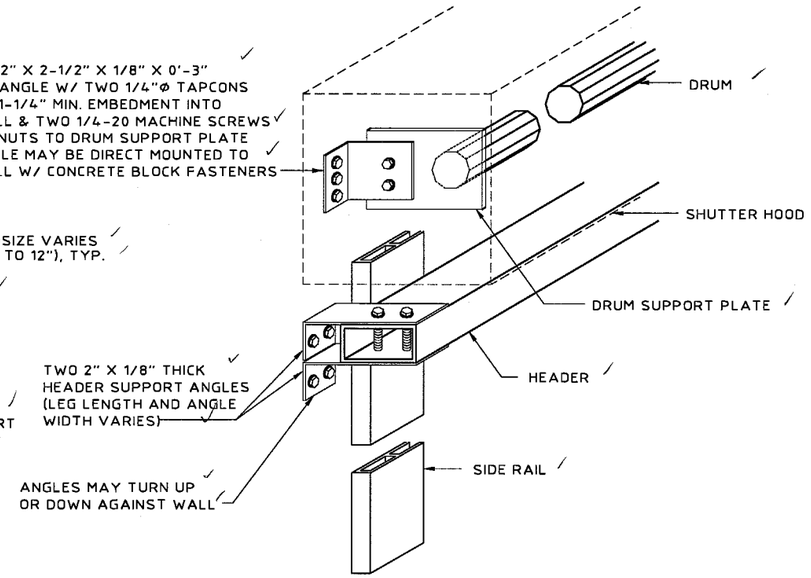

Ⓖ ALT. DRUM SUPPORT & HEADER TO WALL DETAIL
SCALE : 1-1/2" = 1'-0"

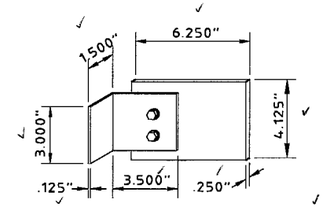

DRUM SUPPORT PLATE DETAIL
SCALE : 1-1/2" = 1'-0"

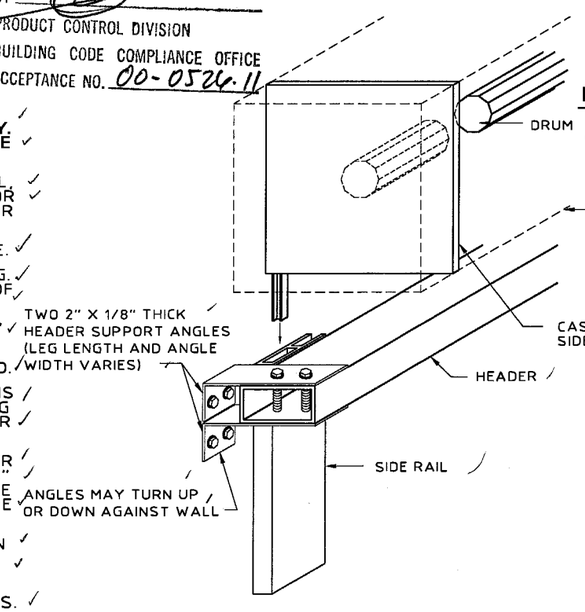

Ⓗ CAST DRUM SUPPORT & HEADER DETAIL
SCALE : 1-1/2" = 1'-0"

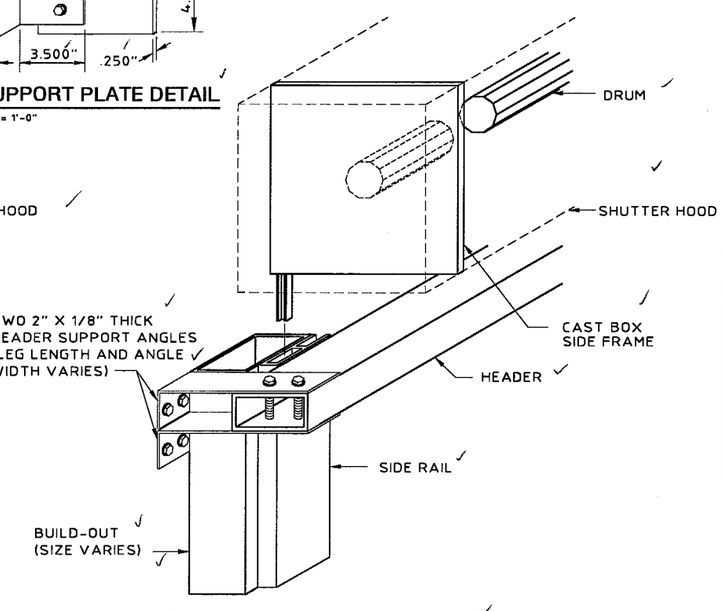

Ⓘ CAST DRUM SUPPORT & HEADER DETAIL W/ BUILD-OUT
SCALE : 1-1/2" = 1'-0"

KNEZEVICH & ASSOCIATES, INC.
CONSULTING ENGINEERS • PRODUCT TESTING
1260 N. UNIVERSITY DRIVE, SUITE 160 • FORT LAUDERDALE, FL 33322
TEL: (954) 382-2800 • FAX: (954) 382-2989 • FLORIDA COA #3205
WEBSITE: WWW.KNEZEVICH.COM • E-MAIL: KA@KNEZEVICH.COM

COPYRIGHT © 2000 KNEZEVICH & ASSOCIATES, INC.

S-50 SYSTEM LICENSED BY SOUTHERN SHUTTER ASSOCIATION

SUPER 50
ROLL-UP SHUTTER
MIAMI HOME SHUTTERS INC.
1130 West 23rd Street
Hialeah, Florida 33010
Tel: (305) 885-4488 • Fax: (305) 887-4488

revisions			
no	date	by	description
1	03/15/00	VJK	COUNTY COMMENTS

SSA I.D.# 05230099349D

V.J. KNEZEVICH
PROFESSIONAL ENGINEER
FL License No: PE 0010983
MAY 24 2000

date 11/29/99	
scale AS NOTED	drawn by MC
design by VJK	checked by VJK
drawing no. 00-917	
sheet 5 of 12	

05/23/00 10:45

Block B
Concrete C

ANCHOR AND FASTENER - SCHEDULE C

POWERS/RAWL CALK-IN - **TENSION** IN 3000 P.S.I. CONCRETE OR HOLLOW CONCRETE BLOCK
POWERS/RAWL CALK-IN - **TENSION** IN 3000 P.S.I. CONCRETE OR HOLLOW CONCRETE BLOCK

ANCHOR TYPE	MATERIAL TYPE	STORM BAR & MULLION REACTION (POUNDS)	WALL MOUNT				ANGLE DIMENSIONS		STORM BAR, MULLION OR HEADER TO ANGLES	
			DIAMETER (INCHES)	EMBEDMENT (INCHES)	QUANTITY OF FASTENERS PER ANGLE	CONCRETE OR BLOCK EDGE DISTANCE (INCHES)	THICKNESS OF TWO (2) ANGLES (INCHES)	MIN. (L) LENGTH OF EACH ANGLE (INCHES)	NO. OF TEK SCREWS EA. LEG EACH ANGLE	SIZE OF TEK SCREWS
LOK/BOLT	B	600	0.250	1.125	1	3.0	0.125	3.00	2	#12
CALK-IN	B	850	0.375	1.250	1	4.5	0.125	4.08	3	#12
LOK/BOLT	B	1200	0.250	1.125	2	3.0	0.125	5.76	3	#12
LOK/BOLT	B	1200	0.250	1.125	2	3.0	0.250	4.00	3	#12
CALK-IN	B	1700	0.375	1.250	2	4.5	0.250	5.25	3	#12
CALK-LOK	C	2508	0.500	1.5 - 2.25	1	6.0	0.250	3.01	4	#14
LOK/BOLT	C	2700	0.375	1.625	2	4.5	0.250	5.25	4	#14
CALK-IN	C	4810	0.375	1.250	2	4.5	0.250	11.50	6	#14
LOK/BOLT	C	5015	0.500	2.250	2	6.0	0.250	11.50	7	#14

Block B
Concrete C

ANCHOR AND FASTENER - SCHEDULE D

POWERS/RAWL CALK-IN - **SHEAR** IN 3000 P.S.I. CONCRETE OR HOLLOW CONCRETE BLOCK
POWERS/RAWL CALK-IN - **SHEAR** IN 3000 P.S.I. CONCRETE OR HOLLOW CONCRETE BLOCK

ANCHOR TYPE	MATERIAL TYPE	STORM BAR & MULLION REACTION (POUNDS)	WALL MOUNT				ANGLE DIMENSIONS		STORM BAR, MULLION OR HEADER TO ANGLES	
			DIAMETER (INCHES)	EMBEDMENT (INCHES)	QUANTITY OF FASTENERS PER ANGLE	CONCRETE OR BLOCK EDGE DISTANCE (INCHES)	THICKNESS OF TWO (2) ANGLES (INCHES)	MIN. (L) LENGTH OF EACH ANGLE (INCHES)	NO. OF TEK SCREWS EA. LEG EACH ANGLE	SIZE OF TEK SCREWS
LOK/BOLT	B	318	0.250	1.125	2	1.25	0.125	SEE DETAIL Ⓑ ON THIS SHEET FOR L	2	#12
CALK-LOK	B	635	0.250	.875 - 1.125	1	3.00	0.125		2	#12
LOK/BOLT	B	635	0.250	1.125	4	1.25	0.125		3	#12
LOK/BOLT	B	1270	0.250	1.125	2	3.00	0.125		3	#12
LOK/BOLT	C	1625	0.375	1.625	1	4.50	0.125		3	#12
CALK-IN	C	1800	0.375	.875	2	3.00	0.125		3	#12
LOK/BOLT	C	3250	0.375	1.625	2	4.50	0.125		5	#14
CALK-IN	C	4220	0.375	1.250	2	4.50	0.125		6	#14
CALK-LOK	C	5800	0.500	1.5 - 2.25	2	6.00	0.125		8	#14
LOK/BOLT	C	5800	0.375	1.625	4	4.50	0.125		8	#14

WOOD FASTENING NOTES:

GALVANIZED STEEL OR 410 STAINLESS STEEL W/ FLUOROCARBON COATING LAG SCREW FOR WOOD, MAY BE USED AT LOADS, QUANTITY & EMBEDMENT INDICATED FOR BLOCK OR CONCRETE. EMBEDMENT SHALL BE AT THE CENTER OF A PRIMARY FRAMING MATERIAL SUCH AS A 2 X WOOD STUD OR A 2 X WOOD HEADER OR SILL PLATE.

NUMBER OF STORM BARS	HEADER REACTION DETERMINATION SCHEDULE E HEADER REACTION EACH END (POUNDS)
1	.5 X ONE STORM BAR END REACTION
2	1 X ONE STORM BAR END REACTION
3 OR MORE	1.5 X ONE STORM BAR END REACTION

SEE SCHEDULE C & D ABOVE FOR ANGLE, ANCHOR AND FASTENER QUANTITY AND SIZE.

ANCHOR SCHEDULE F

FASTENER MAX. SPACING (IN.) REQ'D FOR VARIOUS DESIGN LOADS & SPANS

	ANCHOR TYPE	LOAD (W) P.S.F. MAX. (SEE NOTE 1)	MIN. 3/4" EDGE DISTANCE: SPANS UP TO 4'-0" (SEE NOTE 1) CONN. TYPE (SEE NOTE 3) C1	C2	SPANS UP TO 6'-0" (SEE NOTE 1) CONN. TYPE (SEE NOTE 3) C1	C2	SPANS UP TO 8'-0" (SEE NOTE 1) CONN. TYPE (SEE NOTE 3) C1	C2
EXISTING STRUCTURE	NOTE: HEAD STYLE MAY BE PHILLIPS, FLAT HEAD, HEX HEAD OR PAN HEAD (HEAD = 0.425"Ø MIN.)							
WOOD	1/4"Ø WOOD LAG W/ 1-3/4" MIN. THREAD PENETRATION SHEAR PARALLEL OR PERP. TO WOOD GRAIN	48.0	12	12	12	9	12	7
		62.0	12	11	12	7	12	5
		72.0	12	9	12	6	12	4
		92.0	12	7	12	5	12	3
		220.0	12	3	12	3	12	3
	1/4"Ø ELCO CRETE FLEX WITH 1-7/8" MIN. PENETRATION	48.0	12	12	12	12	12	12
		62.0	12	12	12	12	12	9
		72.0	12	12	12	11	12	8
		92.0	12	12	12	8	12	6
		220.0	12	6	12	6	12	6

SEE PAGE 5 OF 12 FOR COMPLETE ANCHOR NOTES.

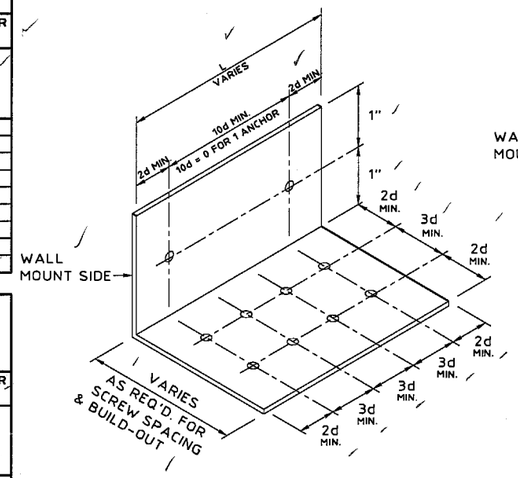

Ⓐ TENSION CONNECTION TO WALL FOR STORM BAR, HEADER, OR MULLION

N.T.S.

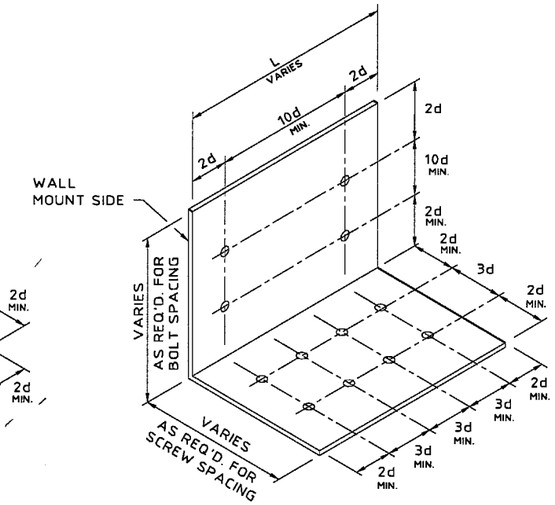

Ⓑ SHEAR CONNECTION TO FLOOR OR CEILING FOR STORM BAR, HEADER, OR MULLION

N.T.S.

NOTE:
ANGLE ISOMETRIC DEPICTS MAXIMUM NUMBER OF ANCHOR BOLTS & TEK SCREWS, AND THEIR ARRANGEMENT. FOR LESS ANCHORS OR TEK SCREWS, ANY 3d OR 10d DIMENSIONS MAY BE = 0.

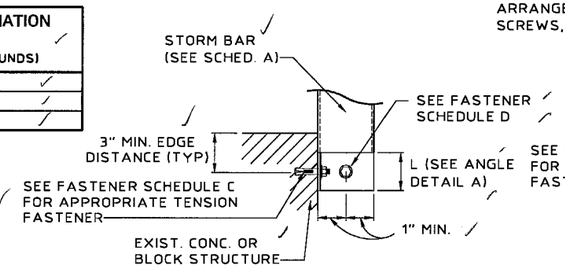

Ⓒ STORM BAR/MULLION TO WALL SECTION

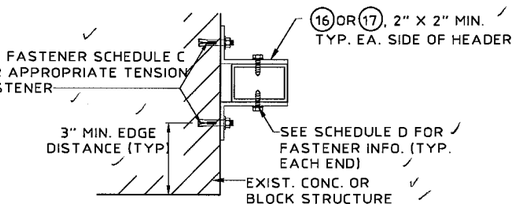

(SEE SCHEDULE E FOR HEADER REACTIONS)

Ⓓ HEADER TO WALL SECTION

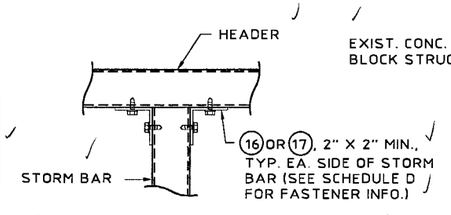

Ⓔ HEADER TO STORM BAR DETAIL

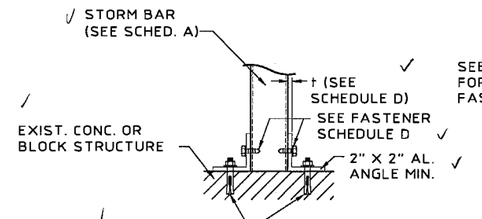

Ⓕ STORM BAR/MULLION TO FLOOR/CEILING DETAIL

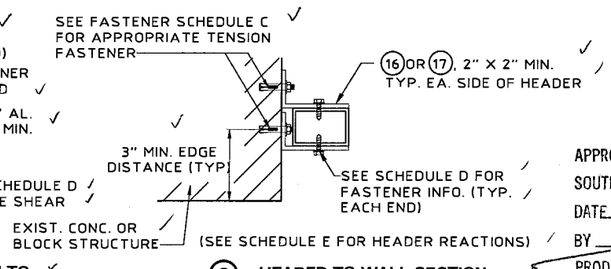

(SEE SCHEDULE E FOR HEADER REACTIONS)

Ⓖ HEADER TO WALL SECTION

APPROVED AS COMPLYING WITH THE SOUTH FLORIDA BUILDING CODE
DATE July 30, 2000
BY
PRODUCT CONTROL DIVISION
BUILDING CODE COMPLIANCE OFFICE
ACCEPTANCE NO. 00-0526.11

STORM BAR/HEADER CONNECTION DETAILS

SCALE : 1-1/2" = 1'-0"

KNEZEVICH & ASSOCIATES, INC.
CONSULTING ENGINEERS • PRODUCT TESTING
1260 N. UNIVERSITY DRIVE, SUITE 160 • FORT LAUDERDALE, FL 33322
TEL: (954) 382-2600 • FAX: (954) 382-2999 • FLORIDA COA #3205
WEBSITE: WWW.KNEZEVICH.COM • E-MAIL: KA@KNEZEVICH.COM

COPYRIGHT © 2000 KNEZEVICH & ASSOCIATES, INC.
S-50 SYSTEM LICENSED BY SOUTHERN SHUTTER ASSOCIATION

SUPER 50 ROLL-UP SHUTTER
MIAMI HOME SHUTTERS INC.
1130 West 23rd Street
Hialeah, Florida 33010
Tel: (305) 885-4488 • Fax: (305) 887-4488

revisions			
no.	date	by	description
1	03/15/00	VJK	COUNTY COMMENTS

SSA I.D.# 05230099349D

V.J. KNEZEVICH
PROFESSIONAL ENGINEER
FL License No: PE 0010983
MAY 24 2000

date 11/29/99	
scale AS NOTED	drawn by MC
design by VJK	checked by VJK

drawing no. 00-917

sheet 6 of 12

05/23/00 10:45

TABLE 5 — EXTERIOR STORM BAR SPAN SCHEDULE (G) - MULTIPLE SPAN SLAT CONDITION

TYPE OF STORM BAR		1" x 3" WITH STRAPS (4)		2" x 3" (5)		2" x 4" (7)		2" x 5" (10)		1" x 2" WITH STRAPS (14)	
NEGATIVE WIND LOAD (P.S.F.)	SLAT SPAN OR STORM BAR SPACING (IN.)	MAXIMUM SPAN (IN.)	END REACTION (LBS.)	MAXIMUM SPAN (IN.)	END REACTION (LBS.)	MAXIMUM SPAN (IN.)	END REACTION (LBS.)	MAXIMUM SPAN (IN.)	END REACTION (LBS.)	MAXIMUM SPAN (IN.)	END REACTION (LBS.)
40	69	77	919	81	967	100	1192	117	1397	59	709
	78	73	980	76	1028	94	1268	110	1488	56	756
	87	69	1038	72	1086	89	1340	104	1575	53	800
	96	66	1093	69	1141	85	1407	100	1657	51	841
	105	63	1146	66	1193	81	1472	95	1735	48	881
	114	61	1196	63	1244	78	1534	92	1810	47	920
	123	58	1244	61	1292	75	1593	88	1882	45	957
50	56	76	926	80	974	99	1201	116	1407	59	714
	65	71	1002	75	1050	92	1295	108	1520	55	772
	74	67	1072	70	1120	86	1382	101	1625	51	825
	83	63	1138	66	1186	81	1463	96	1724	49	876
	92	60	1201	63	1249	77	1541	91	1818	46	924
	101	58	1261	60	1309	74	1614	87	1908	44	970
	110	55	1319	57	1366	71	1685	84	1993	42	1013
60	46	77	923	81	971	99	1197	116	1403	59	712
	55	70	1013	74	1062	91	1309	107	1538	54	781
	64	65	1097	68	1145	84	1412	99	1662	50	844
	73	62	1174	64	1222	79	1508	93	1778	47	903
	82	58	1248	60	1295	75	1597	88	1887	45	959
	91	55	1317	57	1364	71	1682	84	1990	43	1012
	100	53	1383	55	1430	68	1763	80	2086	41	1062
70	39	77	913	81	961	100	1184	118	1388	60	704
	48	70	1019	73	1067	90	1316	106	1545	54	785
	57	65	1115	67	1163	83	1434	98	1689	50	858
	66	60	1204	63	1251	77	1543	91	1822	46	926
	75	57	1287	59	1334	72	1646	86	1946	43	989
	84	54	1365	55	1412	68	1742	81	2060	41	1049
	93	51	1439	53	1486	65	1833	77	2168	39	1105
80	33	79	897	83	945	102	1164	120	1364	61	692
	42	70	1018	73	1067	90	1316	106	1545	54	785
	51	64	1128	67	1176	82	1450	97	1708	49	868
	60	59	1228	61	1275	76	1573	89	1858	45	944
	69	55	1321	57	1368	71	1687	83	1996	42	1015
	78	52	1408	54	1454	66	1794	78	2122	40	1081
	90	49	1545	50	1564	62	1929	73	2281	37	1165
90	28	80	876	85	923	104	1137	122	1332	62	676
	37	70	1014	74	1062	91	1310	107	1538	54	781
	46	63	1137	66	1184	81	1461	96	1722	49	875
	55	58	1248	60	1295	75	1598	88	1888	45	959
	64	54	1351	56	1398	69	1724	82	2039	42	1037
	73	51	1446	52	1493	65	1841	76	2178	39	1110
	87	47	1613	48	1631	59	2011	70	2379	36	1216
100	24	83	849	87	897	107	1103	126	1292	64	656
	33	71	1006	74	1054	92	1300	108	1526	55	775
	42	63	1142	66	1190	81	1468	96	1730	49	879
	51	57	1265	60	1312	74	1618	87	1913	44	972
	60	53	1377	55	1424	68	1756	80	2077	41	1058
	69	50	1481	51	1527	63	1884	75	2228	38	1137
	84	46	1672	46	1689	57	2083	68	2464	35	1261
110	29	72	994	75	1042	93	1286	109	1509	55	766
	38	63	1145	66	1193	81	1471	95	1734	48	881
	47	57	1279	59	1326	73	1636	86	1934	44	983
	56	52	1401	54	1447	67	1785	79	2112	40	1076
	65	49	1513	50	1559	62	1923	73	2275	37	1161
	81	45	1724	45	1740	55	2146	66	2538	34	1300

TABLE 5 — EXTERIOR STORM BAR SPAN SCHEDULE (G) - MULTIPLE SPAN SLAT CONDITION

TYPE OF STORM BAR		1" x 3" WITH STRAPS (4)		2" x 3" (5)		2" x 4" (7)		2" x 5" (10)		1" x 2" WITH STRAPS (14)	
NEGATIVE WIND LOAD (P.S.F.)	SLAT SPAN OR STORM BAR SPACING (IN.)	MAXIMUM SPAN (IN.)	END REACTION (LBS.)	MAXIMUM SPAN (IN.)	END REACTION (LBS.)	MAXIMUM SPAN (IN.)	END REACTION (LBS.)	MAXIMUM SPAN (IN.)	END REACTION (LBS.)	MAXIMUM SPAN (IN.)	END REACTION (LBS.)
120	26	73	980	76	1028	94	1268	110	1488	56	755
	35	63	1145	66	1193	81	1472	95	1734	48	881
	44	56	1291	58	1338	72	1650	85	1951	43	992
	53	52	1422	53	1469	66	1812	78	2143	40	1092
	62	48	1543	49	1589	61	1960	72	2318	37	1184
	79	43	1778	44	1794	54	2213	64	2618	33	1341
130	32	63	1143	66	1191	81	1469	95	1732	49	880
	41	56	1300	58	1348	72	1662	85	1966	43	999
	50	51	1441	53	1488	65	1835	77	2171	39	1107
	59	47	1571	48	1616	60	1993	71	2357	36	1205
	76	42	1815	43	1832	53	2259	62	2672	32	1369
140	30	63	1140	66	1188	81	1465	96	1726	49	877
	39	56	1309	58	1356	71	1672	84	1978	43	1006
	48	50	1459	52	1505	64	1857	76	2196	39	1120
	57	46	1596	48	1641	59	2025	70	2395	36	1224
	73	42	1846	42	1863	52	2298	61	2718	31	1392
150	27	64	1134	66	1182	82	1458	96	1718	49	873
	36	55	1315	57	1362	71	1681	84	1988	43	1011
	45	50	1475	51	1521	63	1877	75	2220	38	1132
	54	46	1620	47	1665	58	2054	69	2429	35	1243
	71	41	1885	41	1902	51	2346	60	2774	31	1421
160	25	64	1127	67	1175	82	1450	97	1708	49	868
	34	55	1320	57	1368	71	1687	83	1995	42	1015
	43	49	1490	51	1536	63	1895	74	2241	38	1144
	52	45	1643	46	1688	57	2082	68	2462	35	1260
	68	39	1964	39	1981	49	2444	58	2891	30	1480
170	24	64	1119	67	1167	83	1439	97	1695	49	861
	33	55	1325	57	1372	70	1692	83	2001	42	1018
	42	49	1504	50	1550	62	1911	74	2261	38	1154
	51	45	1664	46	1709	56	2108	67	2493	34	1276
	64	40	1905	41	1922	50	2371	59	2804	30	1436
180	31	55	1327	57	1375	70	1696	83	2005	42	1020
	40	49	1516	50	1562	62	1927	73	2279	37	1163
	49	44	1685	45	1729	56	2133	66	2523	34	1292
	60	40	1898	41	1915	50	2362	60	2794	31	1431
190	29	55	1329	57	1377	70	1698	83	2008	42	1021
	38	48	1528	50	1573	61	1941	73	2295	37	1172
	47	44	1704	45	1748	55	2156	65	2550	33	1306
	57	40	1901	41	1918	50	2366	60	2798	30	1433
200	28	55	1330	57	1378	70	1699	83	2010	42	1022
	37	48	1538	49	1584	61	1954	72	2311	37	1180
	46	43	1722	44	1766	55	2179	65	2577	33	1320
	55	40	1890	41	1932	50	2383	59	2818	30	1443
210	27	55	1331	57	1378	70	1699	83	2010	42	1022
	36	48	1548	49	1594	61	1966	72	2325	37	1188
	45	43	1740	44	1784	54	2200	64	2602	33	1333
	53	40	1927	40	1944	50	2398	59	2836	30	1453
220	25	55	1330	57	1377	70	1699	83	2009	42	1022
	34	47	1557	49	1603	60	1977	71	2338	36	1195
	43	42	1757	43	1800	54	2221	63	2626	32	1345
	52	39	1937	40	1978	49	2440	58	2886	30	1478

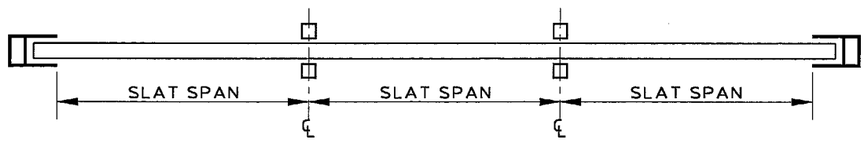

MULTIPLE SPAN SLAT CONDITION

APPROVED AS COMPLYING WITH THE
SOUTH FLORIDA BUILDING CODE
DATE May 20, 2000
BY
PRODUCT CONTROL DIVISION
BUILDING CODE COMPLIANCE OFFICE
ACCEPTANCE NO. 00-0526-11

KNEZEVICH & ASSOCIATES, INC.
CONSULTING ENGINEERS • PRODUCT TESTING
1260 N. UNIVERSITY DRIVE, SUITE 180 • FORT LAUDERDALE, FL 33322
TEL: (954) 382-2800 • FAX: (954) 382-2989 • FLORIDA COA #3205
WEBSITE: WWW.KNEZEVICH.COM • E-MAIL: KA@KNEZEVICH.COM

COPYRIGHT © 2000 KNEZEVICH & ASSOCIATES, INC.

S-50 SYSTEM LICENSED BY SOUTHERN SHUTTER ASSOCIATION

SUPER 50
ROLL-UP SHUTTER
MIAMI HOME SHUTTERS INC.
1130 West 23rd Street
Hialeah, Florida 33010
Tel: (305) 885-4488 • Fax: (305) 887-4488

revisions

no	date	by	description
1	03/15/00	VJK	COUNTY COMMENTS

SSA I.D.# 05230099349D

V.J. KNEZEVICH
PROFESSIONAL ENGINEER
FL License No:
PE 0010983

MAY 24 2000

date 11/29/99	
scale AS NOTED	drawn by MC
design by VJK	checked by VJK

drawing no.
00-917

sheet 7 of 12

05/23/00 10:45

INTERIOR STORM BAR SPAN SCHEDULE ⟨H⟩ - MULTIPLE SPAN SLAT CONDITION

TABLE 6

TYPE OF STORM BAR		1" x 3" WITH STRAPS (4)		2" x 3" (5)		2" x 4" (7)		2" x 5" (10)		1" x 2" WITH STRAPS (14)	
POSITIVE WIND LOAD (P.S.F.)	SLAT SPAN OR STORM BAR SPACING (IN.)	MAXIMUM SPAN (IN.)	END REACTION (LBS.)	MAXIMUM SPAN (IN.)	END REACTION (LBS.)	MAXIMUM SPAN (IN.)	END REACTION (LBS.)	MAXIMUM SPAN (IN.)	END REACTION (LBS.)	MAXIMUM SPAN (IN.)	END REACTION (LBS.)
40	49	90	768	90	767	108	915	124	1052	70	594
	58	83	840	87	870	103	1039	119	1194	64	648
	67	78	906	82	954	100	1157	115	1331	60	699
	76	73	968	77	1016	95	1253	111	1463	57	746
	85	70	1026	73	1074	90	1325	106	1557	54	791
	94	66	1082	69	1130	85	1394	101	1640	51	833
	103	63	1135	66	1183	82	1459	96	1719	49	873
50	43	86	811	88	828	105	988	121	1136	67	626
	52	79	895	83	943	100	1138	115	1309	61	691
	61	73	973	77	1021	95	1259	111	1474	56	750
	70	68	1045	72	1093	88	1348	104	1585	53	805
	79	65	1113	67	1161	83	1432	98	1686	50	857
	88	61	1177	64	1225	79	1511	93	1782	47	906
	97	59	1238	61	1286	75	1586	89	1873	45	952
60	39	83	844	86	877	103	1047	118	1204	64	652
	48	75	941	79	989	98	1220	112	1406	58	726
	57	69	1030	73	1078	90	1330	105	1562	53	793
	66	65	1112	67	1160	83	1431	98	1685	50	856
	75	61	1189	63	1236	78	1525	92	1799	47	914
	84	58	1261	60	1309	74	1614	87	1907	44	969
	93	55	1330	57	1377	70	1698	83	2009	42	1022
70	36	81	871	85	917	101	1095	117	1259	62	672
	45	73	981	76	1029	94	1269	110	1489	56	756
	54	66	1080	69	1128	86	1391	101	1637	51	831
	63	62	1171	64	1219	79	1504	93	1773	47	901
	72	58	1256	60	1304	74	1608	87	1900	44	966
	81	55	1336	57	1383	70	1706	83	2018	42	1027
	90	52	1412	54	1459	66	1799	78	2128	40	1084
80	33	79	893	83	941	100	1134	115	1304	61	689
	42	70	1015	74	1063	91	1311	107	1540	54	782
	51	64	1124	67	1172	82	1446	97	1703	49	865
	60	59	1225	62	1272	76	1569	90	1853	46	942
	69	55	1318	57	1365	71	1684	84	1991	43	1013
	78	52	1405	54	1452	66	1791	79	2118	40	1079
	87	49	1488	51	1534	63	1892	74	2237	38	1142
90	28	80	876	85	923	101	1103	116	1268	62	676
	37	70	1014	74	1062	91	1310	107	1538	54	781
	46	63	1137	66	1184	81	1461	96	1722	49	875
	55	58	1248	60	1295	75	1598	88	1888	45	959
	64	54	1351	56	1398	69	1724	82	2039	42	1037
	73	51	1446	52	1493	65	1841	76	2178	39	1110
	82	48	1536	49	1582	61	1952	72	2308	37	1179
100	24	83	849	86	885	103	1056	118	1214	64	656
	33	71	1006	74	1054	92	1300	108	1526	55	775
	42	63	1142	66	1190	81	1468	96	1730	49	879
	51	57	1265	60	1312	74	1618	87	1913	44	972
	60	53	1377	55	1424	68	1756	80	2077	41	1058
	69	50	1481	51	1527	63	1884	75	2228	38	1137
	78	47	1579	48	1624	59	2004	70	2370	36	1211
110	29	72	994	75	1042	93	1286	109	1509	55	766
	38	63	1145	66	1193	81	1471	95	1734	48	881
	47	57	1279	59	1326	73	1636	86	1934	44	983
	56	52	1401	54	1447	67	1785	79	2112	40	1076
	65	49	1513	50	1559	62	1923	73	2275	37	1161
	75	45	1629	47	1674	58	2065	68	2442	35	1249

INTERIOR STORM BAR SPAN SCHEDULE ⟨H⟩ - MULTIPLE SPAN SLAT CONDITION

TABLE 6

TYPE OF STORM BAR		1" x 3" WITH STRAPS (4)		2" x 3" (5)		2" x 4" (7)		2" x 5" (10)		1" x 2" WITH STRAPS (14)	
POSITIVE WIND LOAD (P.S.F.)	SLAT SPAN OR STORM BAR SPACING (IN.)	MAXIMUM SPAN (IN.)	END REACTION (LBS.)	MAXIMUM SPAN (IN.)	END REACTION (LBS.)	MAXIMUM SPAN (IN.)	END REACTION (LBS.)	MAXIMUM SPAN (IN.)	END REACTION (LBS.)	MAXIMUM SPAN (IN.)	END REACTION (LBS.)
120	26	73	980	76	1028	94	1268	110	1488	56	755
	35	63	1145	66	1193	81	1472	95	1734	48	881
	44	56	1291	58	1338	72	1650	85	1951	43	992
	53	52	1422	53	1469	66	1812	78	2143	40	1092
	62	48	1543	49	1589	61	1960	72	2318	37	1184
	73	44	1680	45	1725	56	2128	66	2516	34	1288
130	32	63	1143	66	1191	81	1469	95	1732	49	880
	41	56	1300	58	1348	72	1662	85	1966	43	999
	50	51	1441	53	1488	65	1835	77	2171	39	1107
	59	47	1571	48	1616	60	1993	71	2357	36	1205
	72	43	1739	44	1783	54	2199	64	2601	33	1332
140	30	63	1140	66	1188	81	1465	96	1726	49	877
	39	56	1309	58	1356	71	1672	84	1978	43	1006
	48	50	1459	52	1505	64	1857	76	2196	39	1120
	57	46	1596	48	1641	59	2025	70	2395	36	1224
	70	42	1781	43	1824	53	2250	63	2661	32	1363
150	27	64	1134	66	1182	82	1458	96	1718	49	873
	36	55	1315	57	1362	71	1681	84	1988	43	1011
	45	50	1475	51	1521	63	1877	75	2220	38	1132
	54	46	1620	47	1665	58	2054	69	2429	35	1243
	69	41	1832	42	1875	51	2313	61	2735	31	1401
160	25	64	1127	67	1175	82	1450	97	1708	49	868
	34	55	1320	57	1368	71	1687	83	1995	42	1015
	43	49	1490	51	1536	63	1895	74	2241	38	1144
	52	45	1643	46	1688	57	2082	68	2462	35	1260
	67	39	1325	40	1967	49	2426	58	2869	30	1469
170	24	64	1119	67	1167	83	1439	97	1695	49	861
	33	55	1325	57	1372	70	1692	83	2001	42	1018
	42	49	1504	50	1550	62	1911	74	2261	38	1154
	51	45	1664	46	1709	56	2108	67	2493	34	1276
	63	40	1865	41	1907	51	2352	60	2782	31	1425
180	31	55	1327	57	1375	70	1696	83	2005	42	1020
	40	49	1516	50	1562	62	1927	73	2279	37	1163
	49	44	1685	45	1729	56	2133	66	2523	34	1292
	60	40	1873	41	1915	50	2362	60	2794	31	1431
190	29	55	1329	57	1377	70	1698	83	2008	42	1021
	38	48	1528	50	1573	61	1941	73	2295	37	1172
	47	44	1704	45	1748	55	2156	65	2550	33	1306
	57	40	1876	41	1918	50	2366	60	2798	30	1433
200	28	55	1330	57	1378	70	1699	83	2010	42	1022
	37	48	1538	49	1584	61	1954	72	2311	37	1180
	46	43	1722	44	1766	55	2179	65	2577	33	1320
	55	40	1890	41	1932	50	2383	59	2818	30	1443
210	27	55	1331	57	1378	70	1699	83	2010	42	1022
	36	48	1548	49	1594	61	1966	72	2325	37	1188
	45	43	1740	44	1784	54	2200	64	2602	33	1333
	54	39	1914	40	1955	49	2412	58	2853	30	1461
220	25	55	1330	57	1377	70	1699	83	2009	42	1022
	34	47	1557	49	1603	60	1977	71	2338	36	1195
	43	42	1757	43	1800	54	2221	63	2626	32	1345
	52	39	1937	40	1978	49	2440	58	2886	30	1478

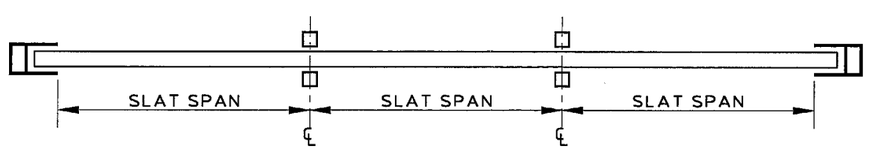

MULTIPLE SPAN SLAT CONDITION

APPROVED AS COMPLYING WITH THE SOUTH FLORIDA BUILDING CODE
DATE July 20, 2000
BY
PRODUCT CONTROL DIVISION
BUILDING CODE COMPLIANCE OFFICE
ACCEPTANCE NO. 00-0526.11

KNEZEVICH & ASSOCIATES, INC.
CONSULTING ENGINEERS • PRODUCT TESTING
1260 N. UNIVERSITY DRIVE, SUITE 160 • FORT LAUDERDALE, FL 33322
TEL: (954) 382-2800 • FAX: (954) 382-2989 • FLORIDA COA #3205
WEBSITE: WWW.KNEZEVICH.COM • E-MAIL: KA@KNEZEVICH.COM

COPYRIGHT © 2000 KNEZEVICH & ASSOCIATES, INC.

S-50 SYSTEM LICENSED BY SOUTHERN SHUTTER ASSOCIATION

SUPER 50
ROLL-UP SHUTTER
MIAMI HOME SHUTTERS INC.
1130 West 23rd Street
Hialeah, Florida 33010
Tel: (305) 885-4488 • Fax: (305) 887-4488

revisions

no	date	by	description
1	03/15/00	VJK	COUNTY COMMENTS

SSA I.D.# 05230099349D

V.J. KNEZEVICH
PROFESSIONAL ENGINEER
FL License No:
PE 0010983

MAY 24 2000

date 11/29/99	
scale AS NOTED	drawn by MC
design by VJK	checked by VJK

drawing no.
00-917

sheet 8 of 12

05/23/00 10:46

TABLE 7 — PERMANENT MULLION SPAN SCHEDULE (1) - MULTIPLE SPAN SLAT CONDITION

TYPE OF MULLION		1" x 3" WITH STRAPS (4)		2" x 3" (5)		2" x 4" (7)		2" x 5" (10)		1" x 2" WITH STRAPS (14)	
NEGATIVE WIND LOAD (P.S.F.)	SLAT SPAN (IN.)	MAXIMUM SPAN (IN.)	END REACTION (LBS.)	MAXIMUM SPAN (IN.)	END REACTION (LBS.)	MAXIMUM SPAN (IN.)	END REACTION (LBS.)	MAXIMUM SPAN (IN.)	END REACTION (LBS.)	MAXIMUM SPAN (IN.)	END REACTION (LBS.)
40	24	92	395	89	395	113	500	136	602	67	289
	36	82	491	80	488	101	618	122	745	60	360
	48	76	579	74	574	93	726	113	875	56	424
	60	71	660	69	653	88	827	106	996	52	484
	72	67	737	66	728	83	922	100	1110	49	540
	84	64	810	63	793	80	1004	96	1210	47	593
	123	57	1027	56	1006	71	1273	85	1534	42	752
50	24	85	458	83	458	105	580	126	699	62	336
	36	76	570	74	567	94	718	113	864	56	418
	48	70	672	69	666	87	843	105	1015	52	492
	60	66	766	64	758	81	959	98	1156	48	561
	72	62	855	61	845	77	1069	93	1288	46	627
	84	60	940	58	921	74	1165	89	1404	44	689
	110	55	1111	54	1088	68	1377	82	1659	40	814
60	24	80	517	78	517	98	655	119	789	59	379
	36	72	644	70	640	89	810	107	976	53	472
	48	66	758	65	752	82	952	98	1147	49	556
	60	62	865	60	856	77	1084	92	1305	45	634
	72	59	966	57	954	73	1208	87	1455	43	708
	84	56	1061	55	1040	69	1316	84	1585	41	778
	100	53	1185	52	1160	66	1469	79	1770	39	868
70	24	76	573	74	574	94	726	113	875	56	420
	36	68	713	66	709	84	898	101	1082	50	523
	48	63	841	61	833	78	1055	93	1271	46	616
	60	59	959	57	949	73	1201	88	1447	43	703
	72	56	1070	54	1057	69	1338	83	1612	41	784
	84	53	1176	52	1152	66	1458	79	1757	39	862
	94	51	1263	50	1237	64	1566	77	1887	38	926
80	24	73	627	71	627	89	794	108	956	53	459
	36	65	780	64	775	80	982	97	1183	48	571
	48	60	919	59	911	74	1153	89	1389	44	673
	60	56	1048	55	1037	70	1313	84	1581	41	768
	72	53	1170	52	1146	66	1451	80	1748	39	857
	84	51	1286	50	1259	63	1594	76	1921	37	942
	90	50	1343	49	1316	62	1665	74	2006	36	984
90	24	70	678	68	678	86	858	104	1034	51	497
	36	63	843	61	839	77	1062	93	1279	46	618
	48	58	994	56	985	71	1247	86	1503	42	728
	60	54	1134	53	1122	67	1420	81	1710	40	831
	72	51	1265	50	1240	64	1569	77	1890	38	927
	84	49	1391	48	1362	61	1724	73	2077	36	1019
	87	48	1418	47	1389	60	1758	72	2118	36	1039
100	24	68	727	66	727	83	921	100	1109	50	533
	36	61	905	59	900	75	1139	90	1372	44	663
	48	56	1066	54	1057	69	1338	83	1612	41	781
	60	52	1216	51	1203	65	1523	78	1835	38	891
	72	50	1358	49	1330	61	1683	74	2028	36	995
	84	47	1492	46	1461	59	1850	71	2229	35	1093
110	24	66	775	64	775	80	981	97	1182	48	568
	36	59	964	57	959	72	1214	87	1462	43	706
	48	54	1136	53	1126	67	1426	80	1718	40	833
	60	51	1296	49	1282	63	1623	75	1955	37	950
	72	48	1447	47	1417	59	1794	72	2161	35	1060
	81	46	1555	45	1523	57	1928	69	2322	34	1139

TABLE 7 — PERMANENT MULLION SPAN SCHEDULE (1) - MULTIPLE SPAN SLAT CONDITION

TYPE OF MULLION		1" x 3" WITH STRAPS (4)		2" x 3" (5)		2" x 4" (7)		2" x 5" (10)		1" x 2" WITH STRAPS (14)	
POSITIVE WIND LOAD (P.S.F.)	SLAT SPAN (IN.)	MAXIMUM SPAN (IN.)	END REACTION (LBS.)	MAXIMUM SPAN (IN.)	END REACTION (LBS.)	MAXIMUM SPAN (IN.)	END REACTION (LBS.)	MAXIMUM SPAN (IN.)	END REACTION (LBS.)	MAXIMUM SPAN (IN.)	END REACTION (LBS.)
120	24	64	821	62	821	78	1040	94	1253	47	602
	36	57	1022	55	1016	70	1286	85	1550	42	749
	48	53	1204	51	1194	65	1511	78	1820	39	882
	60	49	1373	48	1359	61	1720	73	2072	36	1006
	72	47	1533	46	1502	58	1901	70	2290	34	1123
	79	45	1622	44	1589	56	2012	68	2424	33	1189
130	24	62	866	60	866	76	1097	92	1321	45	635
	36	56	1078	54	1072	68	1357	82	1635	41	790
	48	51	1270	50	1259	63	1594	76	1920	38	931
	60	48	1449	47	1433	59	1814	71	2186	35	1062
	72	45	1617	44	1584	56	2005	68	2416	33	1185
	76	45	1667	44	1637	55	2072	67	2497	33	1225
140	24	60	910	59	910	74	1152	89	1388	44	667
	36	54	1132	53	1126	67	1426	80	1717	40	830
	48	50	1334	49	1323	62	1674	74	2017	37	978
	60	47	1522	46	1506	58	1906	70	2296	34	1115
	72	44	1689	43	1664	55	2107	66	2528	32	1245
	73	44	1700	43	1678	55	2124	65	2544	32	1255
150	24	59	953	57	953	73	1207	87	1454	43	698
	36	53	1185	52	1179	65	1493	79	1798	39	869
	48	49	1397	48	1385	60	1753	72	2112	36	1024
	60	46	1594	45	1577	56	1996	68	2404	33	1168
	71	43	1738	43	1728	54	2187	64	2600	32	1293
160	24	58	995	56	995	71	1260	86	1518	42	729
	36	52	1237	50	1231	64	1558	77	1877	38	907
	48	48	1458	47	1446	59	1830	71	2205	35	1069
	60	45	1661	44	1630	55	2063	67	2485	33	1219
	68	42	1761	42	1757	53	2224	63	2633	32	1315
170	24	57	1036	55	1036	70	1312	84	1580	42	759
	36	51	1289	49	1282	63	1623	75	1955	37	944
	48	47	1519	46	1506	58	1906	70	2296	34	1113
	60	43	1714	43	1697	54	2148	65	2565	32	1269
	64	42	1767	42	1764	53	2233	63	2641	32	1320
180	24	56	1076	54	1076	68	1363	82	1642	41	788
	36	50	1339	48	1331	61	1686	74	2031	37	981
	48	46	1578	45	1564	57	1980	68	2385	34	1156
	60	42	1766	42	1763	53	2232	63	2640	32	1319
190	24	55	1115	53	1116	67	1413	81	1702	40	817
	36	49	1388	48	1380	60	1747	73	2105	36	1017
	48	45	1635	44	1602	56	2028	67	2443	33	1198
	57	42	1773	42	1773	53	2241	63	2650	31	1326
200	24	54	1154	52	1155	66	1462	79	1761	39	846
	36	48	1436	47	1428	59	1808	71	2178	35	1052
	48	44	1683	43	1658	55	2099	66	2521	33	1240
	55	42	1791	42	1796	53	2263	62	2676	31	1343
210	24	53	1192	51	1193	65	1510	78	1819	39	874
	36	47	1483	46	1476	58	1868	70	2250	35	1087
	48	43	1727	43	1713	54	2168	64	2583	32	1281
	54	41	1822	41	1835	52	2300	61	2720	31	1373
220	24	52	1230	50	1231	64	1558	77	1877	38	901
	36	47	1530	45	1522	57	1927	69	2321	34	1121
	48	42	1769	42	1767	53	2235	63	2644	31	1322
	52	41	1834	41	1851	51	2315	61	2738	31	1385

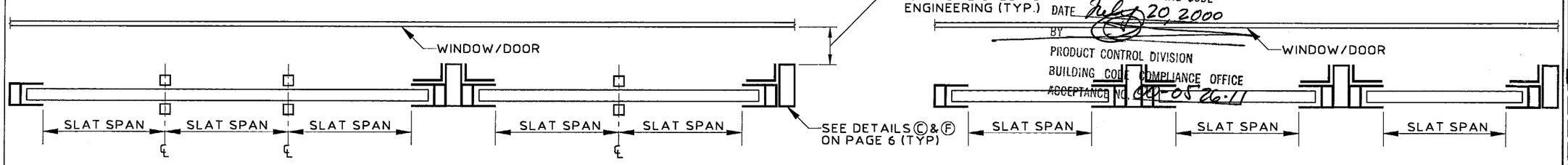

APPROVED AS COMPLYING WITH THE SOUTH FLORIDA BUILDING CODE
DATE July 20, 2000
BY
PRODUCT CONTROL DIVISION
BUILDING CODE COMPLIANCE OFFICE
ACCEPTANCE NO. 00-0526.11

MULLION LAYOUT

KNEZEVICH & ASSOCIATES, INC.
CONSULTING ENGINEERS • PRODUCT TESTING
1260 N. UNIVERSITY DRIVE, SUITE 180 • FORT LAUDERDALE, FL 33322
TEL: (954) 382-2800 • FAX: (954) 382-2989 • FLORIDA COA #3205
WEBSITE: WWW.KNEZEVICH.COM • E-MAIL: KA@KNEZEVICH.COM

COPYRIGHT © 2000 KNEZEVICH & ASSOCIATES, INC.

S-90 SYSTEM LICENSED BY SOUTHERN SHUTTER ASSOCIATION

SUPER 50
ROLL-UP SHUTTER
MIAMI HOME SHUTTERS INC.
1130 West 23rd Street
Hialeah, Florida 33010
Tel: (305) 885-4488 • Fax: (305) 887-4488

revisions

no	date	by	description
1	03/15/00	VJK	COUNTY COMMENTS

SSA I.D.# 052300099349D

V.J. KNEZEVICH
PROFESSIONAL ENGINEER
FL License No:
PE 0010983

MAY 24 2000

date 11/29/99	
scale AS NOTED	drawn by MC
design by VJK	checked by VJK

drawing no.
00-917

sheet 9 of 12

05/23/00 10:46

HEADER LENGTH OR SHUTTER WIDTH SCHEDULE (J)

HEADER – MAX. LENGTH (INCHES)

NEGATIVE DESIGN LOAD (P.S.F.)	MAXIMUM SLAT SPAN USED (IN)	HEADER TYPE: (5) 2" x 3" — STORM BAR HEIGHT (INCHES)								(7) 2" x 4" — STORM BAR HEIGHT (INCHES)								(10) 2" x 5" — STORM BAR HEIGHT (INCHES)								(12) 2" x 6" — STORM BAR HEIGHT (INCHES)							
		48	60	72	84	96	120	180	240	48	60	72	84	96	120	180	240	48	60	72	84	96	120	180	240	48	60	72	84	96	120	180	240
40	24	152	136	125	116	108	97	79	69	185	166	152	141	132	119	98	85	216	194	178	165	155	139	114	99	245	221	202	188	176	159	130	114
	36	152	136	125	116	108	98	71	61	185	166	152	141	132	119	99	85	216	194	178	165	155	139	114	101	245	221	202	188	176	159	130	114
	48	152	138	126	117	110	87	71	61	185	166	152	143	134	120	87	76	216	194	178	165	155	141	116	89	245	221	202	188	176	159	132	115
	60	154	138	112	104	97	87	71	61	185	168	154	143	119	107	87	76	216	194	180	167	157	141	103	89	245	221	202	188	178	160	117	102
	72	136	122	112	104	97	87	–	–	187	168	137	127	119	107	87	76	216	196	180	167	139	125	103	89	245	221	205	190	178	160	117	102
	123	136	–	–	–	–	–	–	–	166	149	137	–	–	–	–	–	194	174	160	148	139	–	–	–	221	198	182	169	159	142	–	–
50	24	136	122	112	104	97	87	72	62	166	149	137	127	119	107	87	76	194	174	160	148	139	125	103	89	221	198	182	169	159	142	117	102
	36	136	122	112	105	98	88	63	55	166	149	137	127	119	108	88	68	194	174	160	148	139	125	104	90	221	198	182	169	159	142	117	103
	48	138	124	113	93	87	78	63	55	166	149	138	128	120	96	78	68	194	174	160	148	141	126	92	80	221	198	182	169	159	144	118	92
	60	138	110	100	93	87	78	63	–	168	151	138	114	107	96	78	68	194	176	161	150	141	112	92	80	221	198	182	171	160	144	105	92
	72	122	110	100	93	87	78	–	–	168	134	123	114	107	96	78	–	196	176	161	133	125	112	92	80	221	201	184	171	160	128	105	92
	110	122	–	–	–	–	–	–	–	149	134	123	114	–	–	–	–	174	157	143	133	125	112	–	–	198	178	164	152	142	128	–	–
60	24	125	112	102	95	88	79	65	57	152	137	125	116	109	98	80	70	178	160	146	136	127	114	94	82	202	182	167	155	145	130	107	93
	36	125	112	103	96	89	71	58	50	152	137	125	116	109	99	71	62	178	160	146	136	127	114	95	83	202	182	167	155	145	130	109	94
	48	126	113	91	85	79	71	58	50	152	138	126	117	110	87	71	62	178	160	146	137	129	116	84	73	202	182	167	155	145	132	108	84
	60	112	100	91	85	79	71	–	–	154	138	112	104	98	87	71	62	180	161	148	137	114	103	84	73	202	182	169	157	147	117	96	84
	72	112	100	91	85	79	–	–	–	137	123	112	104	98	87	–	–	180	161	131	122	114	103	84	73	205	184	169	139	130	117	96	84
	100	112	–	–	–	–	–	–	–	137	123	112	104	–	–	–	–	160	143	131	122	114	103	–	–	182	164	150	139	130	117	–	–
70	24	116	104	95	88	82	73	60	46	141	127	116	108	101	90	74	65	165	148	136	126	118	106	87	76	188	169	155	144	135	121	100	87
	36	116	105	96	89	83	66	53	46	141	127	116	108	102	91	66	57	165	148	136	126	118	107	88	68	188	169	155	144	135	121	101	88
	48	117	93	85	78	73	66	53	–	143	128	117	109	90	81	66	57	165	148	137	127	120	95	78	68	188	169	155	145	136	122	89	78
	60	104	93	85	78	73	66	–	–	143	114	104	97	90	81	66	–	167	150	137	113	106	95	78	68	188	171	157	145	136	109	89	78
	72	104	93	85	78	73	–	–	–	127	114	104	97	90	81	–	–	167	133	122	113	106	95	78	–	190	171	139	129	121	109	89	78
	84	104	93	85	–	–	–	–	–	127	114	104	97	90	–	–	–	148	133	122	113	106	95	–	–	190	152	139	129	121	109	89	–
	94	104	–	–	–	–	–	–	–	127	114	104	97	–	–	–	–	148	133	122	113	106	95	–	–	169	152	139	129	121	109	–	–
80	24	108	97	88	82	77	69	57	43	132	119	109	101	94	85	70	60	155	139	127	118	111	99	82	71	176	159	145	135	126	114	93	81
	36	108	98	89	83	69	61	50	43	132	119	109	102	96	85	62	53	155	139	127	118	111	101	83	63	176	159	145	135	126	114	94	82
	48	110	87	79	73	69	61	50	–	134	120	110	90	85	76	62	53	155	141	129	120	112	89	73	63	176	159	145	136	128	115	84	73
	60	97	87	79	73	69	61	–	–	119	107	98	90	85	76	62	–	157	141	114	106	99	89	73	63	178	160	147	136	114	102	84	73
	72	97	87	79	73	–	–	–	–	119	107	98	90	85	76	–	–	139	125	114	106	99	89	73	–	178	160	130	121	114	102	84	73
	78	97	87	79	–	–	–	–	–	119	107	98	90	85	–	–	–	139	125	114	106	99	89	–	–	178	142	130	121	114	102	84	–
	90	97	–	–	–	–	–	–	–	119	107	98	90	–	–	–	–	139	125	114	106	99	–	–	–	159	142	130	121	114	102	–	–
90	24	102	91	83	77	72	65	47	41	125	112	103	95	89	80	66	57	146	131	120	112	105	94	77	67	167	150	137	127	120	107	88	77
	36	103	92	84	69	65	58	47	41	125	112	104	96	90	71	58	50	146	131	120	112	106	95	69	60	167	150	137	127	120	109	89	69
	48	91	82	75	69	65	58	–	–	126	113	92	85	80	71	58	50	146	133	122	113	94	84	69	60	167	150	139	129	121	108	79	69
	60	91	82	75	69	65	–	–	–	112	101	92	85	80	71	–	–	148	118	108	100	94	84	69	–	169	151	139	114	107	96	79	69
	72	91	82	75	–	–	–	–	–	112	101	92	85	80	–	–	–	131	118	108	100	94	84	–	–	169	135	123	114	107	96	79	–
	78	91	82	–	–	–	–	–	–	112	101	92	85	80	–	–	–	131	118	108	100	94	84	–	–	150	135	123	114	107	96	79	–
	87	91	–	–	–	–	–	–	–	112	101	92	–	–	–	–	–	131	118	108	100	94	–	–	–	150	135	123	114	107	96	–	–

NOTE: INTERPOLATE FOR HEADER SPANS AND REACTIONS BETWEEN THOSE SHOWN ON THIS SHEET.
FOR HEADER REACTION DETERMINATION AND END CONNECTION DETAILS/ANCHORS, SEE SCHEDULE E, SHEET 6 OF 12.

APPROVED AS COMPLYING WITH THE
SOUTH FLORIDA BUILDING CODE
DATE July 20, 2000
BY
PRODUCT CONTROL DIVISION
BUILDING CODE COMPLIANCE OFFICE
ACCEPTANCE NO. 00-0526-11

KNEZEVICH & ASSOCIATES, INC.
CONSULTING ENGINEERS • PRODUCT TESTING
1260 N. UNIVERSITY DRIVE, SUITE 180 • FORT LAUDERDALE, FL 33322
TEL: (954) 382-2800 • FAX: (954) 382-2989 • FLORIDA COA #3205
WEBSITE: WWW.KNEZEVICH.COM • E-MAIL: KA@KNEZEVICH.COM

COPYRIGHT © 2000 KNEZEVICH & ASSOCIATES, INC.

S-50 SYSTEM LICENSED BY SOUTHERN SHUTTER ASSOCIATION

SUPER 50
ROLL-UP SHUTTER

MIAMI HOME SHUTTERS INC.
1130 West 23rd Street
Hialeah, Florida 33010
Tel: (305) 885-4488 • Fax: (305) 887-4488

revisions

no	date	by	description
1	09/15/00	VJK	COUNTY COMMENTS

SSA I.D.# 05230099349D

V.J. KNEZEVICH
PROFESSIONAL ENGINEER
FL License No:
PE 0010983

MAY 24 2000

date 11/29/99	
scale AS NOTED	drawn by MC
design by VJK	checked by VJK

drawing no.
00-917

sheet 10 of 12

05/23/00 10:46

HEADER LENGTH OR SHUTTER WIDTH SCHEDULE (J)

HEADER – MAX. LENGTH (INCHES)

HEADER TYPE

NEGATIVE DESIGN LOAD (P.S.F.)	MAXIMUM SLAT SPAN USED (IN)	(5) 2" x 3"								(7) 2" x 4"								(10) 2" x 5"								(12) 2" x 6"							
		STORM BAR HEIGHT (INCHES)								STORM BAR HEIGHT (INCHES)								STORM BAR HEIGHT (INCHES)								STORM BAR HEIGHT (INCHES)							
		48	60	72	84	96	120	180	240	48	60	72	84	96	120	180	240	48	60	72	84	96	120	180	240	48	60	72	84	96	120	180	240
100	24	97	87	79	73	69	62	45	39	119	107	98	90	85	76	62	48	139	125	114	106	99	89	73	64	159	142	130	121	114	102	84	73
	36	98	88	71	66	61	55	45	39	119	108	99	91	85	68	55	48	139	125	114	107	101	90	65	57	159	142	130	121	114	103	85	65
	48	87	78	71	66	61	55	–	–	120	96	87	81	76	68	55	–	141	126	116	95	89	80	65	57	159	144	132	122	115	92	75	65
	60	87	78	71	66	61	–	–	–	107	96	87	81	76	68	–	–	141	112	103	95	89	80	65	–	160	144	117	109	102	92	75	65
	66	87	78	71	–	–	–	–	–	107	96	87	81	76	68	–	–	125	112	103	95	89	80	–	–	160	128	117	109	102	92	75	–
	72	87	78	–	–	–	–	–	–	107	96	87	81	76	–	–	–	125	112	103	95	89	80	–	–	160	128	117	109	102	92	75	–
	84	87	–	–	–	–	–	–	–	107	96	87	–	–	–	–	–	125	112	103	95	89	–	–	–	142	128	117	109	102	92	–	–
110	24	92	83	75	71	66	59	43	37	113	102	93	86	81	72	60	46	133	119	109	101	95	85	70	61	151	136	125	116	108	97	80	70
	36	93	84	67	62	58	52	43	37	113	103	94	87	81	64	53	46	133	119	109	102	96	86	62	54	151	136	125	116	108	98	72	62
	48	83	74	67	62	58	52	–	–	115	91	83	77	72	64	53	–	134	121	110	91	85	76	62	54	151	138	126	117	110	87	72	62
	60	83	74	67	62	–	–	–	–	102	91	83	77	72	64	–	–	134	107	98	91	85	76	62	–	153	138	112	104	97	87	72	62
	66	83	74	67	–	–	–	–	–	102	91	83	77	72	–	–	–	119	107	98	91	85	76	–	–	153	122	112	104	97	87	72	–
	72	83	74	–	–	–	–	–	–	102	91	83	77	72	–	–	–	119	107	98	91	85	76	–	–	136	122	112	104	97	87	–	–
	81	83	–	–	–	–	–	–	–	102	91	83	–	–	–	–	–	119	107	98	91	85	–	–	–	136	122	112	104	97	87	–	–
120	24	88	79	72	68	63	57	41	35	109	98	89	82	77	70	57	44	127	114	105	97	91	82	67	58	145	130	120	111	104	93	77	67
	36	89	71	65	60	56	50	41	–	109	99	90	83	69	62	50	44	127	114	106	98	92	83	60	52	145	130	120	111	105	94	69	59
	48	79	71	65	60	56	50	–	–	110	87	80	74	69	62	50	–	129	116	94	87	82	73	60	52	145	132	121	112	93	84	69	59
	60	79	71	65	–	–	–	–	–	98	87	80	74	69	62	–	–	114	103	94	87	82	73	–	–	147	117	107	100	93	84	69	–
	66	79	71	–	–	–	–	–	–	98	87	80	74	69	–	–	–	114	103	94	87	82	73	–	–	147	117	107	100	93	84	69	–
	72	79	–	–	–	–	–	–	–	98	87	80	74	–	–	–	–	114	103	94	87	82	73	–	–	130	117	107	100	93	84	–	–
	79	79	–	–	–	–	–	–	–	98	87	80	–	–	–	–	–	114	103	94	87	82	–	–	–	130	117	107	100	93	84	–	–
130	24	85	76	70	65	61	54	39	34	105	94	86	79	74	67	55	42	123	110	101	93	88	78	65	56	140	126	115	107	100	90	74	65
	36	86	68	62	57	54	48	39	–	106	95	87	71	66	59	48	42	123	110	102	94	89	70	57	50	140	126	115	108	101	91	66	57
	48	76	68	62	57	54	48	–	–	94	84	77	71	66	59	48	–	124	111	90	84	78	70	57	50	141	127	116	108	90	81	66	57
	60	76	68	62	–	–	–	–	–	94	84	77	71	66	–	–	–	110	99	90	84	78	70	–	–	141	113	103	96	90	81	66	–
	66	76	68	–	–	–	–	–	–	94	84	77	71	66	–	–	–	110	99	90	84	78	70	–	–	126	113	103	96	90	81	–	–
	72	76	–	–	–	–	–	–	–	94	84	77	–	–	–	–	–	110	99	90	84	78	–	–	–	126	113	103	96	90	81	–	–
	76	–	–	–	–	–	–	–	–	94	84	77	–	–	–	–	–	110	99	90	84	78	–	–	–	126	113	103	96	90	81	–	–
140	24	82	73	68	63	59	46	38	33	101	90	82	76	72	65	47	40	118	106	97	90	84	76	62	48	135	121	111	103	97	87	72	62
	36	83	66	60	55	52	46	38	–	102	91	83	68	64	57	47	40	118	107	98	91	85	68	55	48	135	121	111	104	98	88	64	55
	48	73	66	60	55	52	–	–	–	90	81	74	68	64	57	–	–	120	95	87	81	76	68	55	–	136	122	112	92	87	78	64	55
	54	73	66	60	55	–	–	–	–	90	81	74	68	64	57	–	–	106	95	87	81	76	68	55	–	136	122	100	92	87	78	64	55
	60	73	66	–	–	–	–	–	–	90	81	74	68	64	–	–	–	106	95	87	81	76	68	–	–	136	109	100	92	87	78	64	–
	66	73	–	–	–	–	–	–	–	90	81	74	68	–	–	–	–	106	95	87	81	76	68	–	–	121	109	100	92	87	78	–	–
	73	–	–	–	–	–	–	–	–	90	81	74	–	–	–	–	–	106	95	87	81	76	–	–	–	121	109	100	92	87	78	–	–
150	24	79	72	65	60	57	45	37	32	98	87	80	74	70	62	45	39	114	103	94	87	82	73	60	46	130	117	107	100	93	84	69	60
	36	71	63	58	53	50	45	37	–	99	88	71	66	62	55	45	39	114	104	95	88	83	65	53	46	130	117	107	101	94	85	61	53
	48	71	63	58	53	50	–	–	–	87	78	71	66	62	55	–	–	116	92	84	78	73	65	53	–	132	118	108	89	84	75	61	53
	54	71	63	58	–	–	–	–	–	87	78	71	66	62	55	–	–	103	92	84	78	73	65	–	–	132	105	96	89	84	75	61	–
	60	71	63	–	–	–	–	–	–	87	78	71	66	62	–	–	–	103	92	84	78	73	65	–	–	117	105	96	89	84	75	61	–
	66	71	–	–	–	–	–	–	–	87	78	71	–	–	–	–	–	103	92	84	78	73	–	–	–	117	105	96	89	84	75	–	–
	71	–	–	–	–	–	–	–	–	87	78	71	–	–	–	–	–	103	92	84	78	73	–	–	–	117	105	96	89	84	75	–	–

NOTE: INTERPOLATE FOR HEADER SPANS AND REACTIONS BETWEEN THOSE SHOWN ON THIS SHEET.
FOR HEADER REACTION DETERMINATION AND END CONNECTION DETAILS/ANCHORS, SEE SCHEDULE E, SHEET 6 OF 12.

APPROVED AS COMPLYING WITH THE SOUTH FLORIDA BUILDING CODE
DATE July 20, 2000
BY
PRODUCT CONTROL DIVISION
BUILDING CODE COMPLIANCE OFFICE
ACCEPTANCE NO. 00-0526.11

KNEZEVICH & ASSOCIATES, INC.
CONSULTING ENGINEERS • PRODUCT TESTING
1260 N. UNIVERSITY DRIVE, SUITE 180 • FORT LAUDERDALE, FL 33322
TEL: (954) 382-2800 • FAX: (954) 382-2889 • FLORIDA COA #3205
WEBSITE: WWW.KNEZEVICH.COM • E-MAIL: KA@KNEZEVICH.COM

COPYRIGHT © 2000 KNEZEVICH & ASSOCIATES, INC.

S-50 SYSTEM LICENSED BY SOUTHERN SHUTTER ASSOCIATION

SUPER 50 ROLL-UP SHUTTER

MIAMI HOME SHUTTERS INC.
1130 West 23rd Street
Hialeah, Florida 33010
Tel: (305) 885-4488 • Fax: (305) 887-4488

revisions			
no	date	by	description
1	03/15/00	VJK	COUNTY COMMENTS

SSA I.D.# 05230099349D

V.J. KNEZEVICH
PROFESSIONAL ENGINEER
FL License No: PE 0010983
MAY 24 2000

date 1/29/99
scale AS NOTED
drawn by MC
design by VJK
checked by VJK
drawing no. 00-917
sheet 11 of 12

HEADER LENGTH OR SHUTTER WIDTH SCHEDULE ⟨J⟩

HEADER - MAX. LENGTH (INCHES)

NEGATIVE DESIGN LOAD (P.S.F.)	MAXIMUM SLAT SPAN USED (IN)	HEADER TYPE: (5) 2" x 3" — STORM BAR HEIGHT (INCHES)								(7) 2" x 4" — STORM BAR HEIGHT (INCHES)								(10) 2" x 5" — STORM BAR HEIGHT (INCHES)								(12) 2" x 6" — STORM BAR HEIGHT (INCHES)							
		48	60	72	84	96	120	180	240	48	60	72	84	96	120	180	240	48	60	72	84	96	120	180	240	48	60	72	84	96	120	180	240
160	24	77	69	63	59	55	43	35	31	94	85	77	71	68	60	44	38	111	99	91	84	79	71	58	45	126	114	104	97	90	81	67	58
	36	69	61	56	52	48	43	-	-	96	85	69	64	60	53	44	38	111	101	92	85	71	63	52	45	126	114	105	98	91	82	59	51
	48	69	61	56	52	48	-	-	-	85	76	69	64	60	53	-	-	112	89	82	76	71	63	52	-	128	115	93	87	81	73	59	51
	54	69	61	56	-	-	-	-	-	85	76	69	64	60	-	-	-	99	89	82	76	71	63	-	-	128	102	93	87	81	73	59	-
	60	69	61	-	-	-	-	-	-	85	76	69	64	-	-	-	-	99	89	82	76	71	63	-	-	114	102	93	87	81	73	-	-
	66	69	-	-	-	-	-	-	-	85	76	69	-	-	-	-	-	99	89	82	76	71	-	-	-	114	102	93	87	81	73	-	-
	68	69	-	-	-	-	-	-	-	85	76	69	-	-	-	-	-	99	89	82	76	71	-	-	-	114	102	93	87	81	73	-	-
170	24	74	67	61	57	47	42	34	30	92	82	75	70	66	59	42	37	108	97	88	82	77	69	57	43	123	110	101	94	88	79	65	56
	36	66	59	54	50	47	42	-	-	93	83	67	62	58	52	42	37	109	98	89	83	69	61	50	43	123	110	102	95	89	71	58	50
	48	66	59	54	50	-	-	-	-	82	73	67	62	58	52	-	-	109	87	79	73	69	61	50	-	124	112	91	84	79	71	58	50
	54	66	59	54	-	-	-	-	-	82	73	67	62	58	-	-	-	97	87	79	73	69	61	-	-	124	99	91	84	79	71	58	-
	60	66	-	-	-	-	-	-	-	82	73	67	62	-	-	-	-	97	87	79	73	69	61	-	-	110	99	91	84	79	71	-	-
	66	66	-	-	-	-	-	-	-	82	73	67	-	-	-	-	-	97	87	79	73	69	-	-	-	110	99	91	84	79	71	-	-
	64	66	-	-	-	-	-	-	-	82	73	67	-	-	-	-	-	97	87	79	73	69	-	-	-	110	99	91	84	79	71	-	-
180	24	72	65	60	55	46	41	33	29	89	80	73	68	64	57	41	36	105	94	86	80	75	67	55	42	120	107	98	91	85	77	63	55
	36	65	58	53	49	46	41	-	-	90	71	65	60	56	50	41	-	106	95	87	71	67	60	49	42	120	107	99	92	86	69	56	49
	48	65	58	53	49	-	-	-	-	80	71	65	60	56	50	-	-	94	84	77	71	67	60	49	-	121	108	88	82	77	69	56	49
	54	65	58	-	-	-	-	-	-	80	71	65	60	56	-	-	-	94	84	77	71	67	60	-	-	121	96	88	82	77	69	56	-
	60	65	-	-	-	-	-	-	-	80	71	65	60	-	-	-	-	94	84	77	71	67	-	-	-	107	96	88	82	77	69	-	-
190	24	71	64	58	48	44	40	32	28	87	78	72	66	62	55	40	35	102	92	84	78	73	66	47	41	116	105	96	89	83	75	62	47
	36	63	56	51	48	44	40	-	-	88	69	63	59	55	49	40	-	103	93	85	69	65	58	47	41	116	106	97	90	84	67	55	47
	48	63	56	51	-	-	-	-	-	78	69	63	59	55	49	-	-	92	82	75	69	65	58	-	-	118	94	86	80	75	67	55	-
	57	63	-	-	-	-	-	-	-	78	69	63	59	-	-	-	-	92	82	75	69	65	58	-	-	105	94	86	80	75	67	-	-
200	24	69	62	57	46	43	39	32	27	85	76	70	65	60	48	39	34	99	89	82	76	71	64	46	40	114	102	93	87	81	73	60	46
	30	69	55	50	46	43	39	32	-	85	76	70	57	53	48	39	34	99	90	83	76	71	57	46	40	114	102	93	88	82	74	53	46
	36	61	55	50	46	43	39	-	-	85	68	62	57	53	48	39	-	101	90	83	68	63	57	46	40	114	103	94	88	82	65	53	46
	42	61	55	50	46	43	-	-	-	76	68	62	57	53	48	-	-	101	80	73	68	63	57	46	-	115	103	94	78	73	65	53	46
	48	61	55	50	-	-	-	-	-	76	68	62	57	53	-	-	-	89	80	73	68	63	57	-	-	115	92	84	78	73	65	53	-
	55	61	-	-	-	-	-	-	-	76	68	62	57	-	-	-	-	89	80	73	68	63	57	-	-	102	92	84	78	73	65	-	-
210	24	68	60	55	45	42	38	31	27	82	74	68	63	59	47	38	33	97	87	80	74	70	62	45	39	111	100	91	85	79	72	59	45
	30	60	53	49	45	42	38	31	-	83	75	68	56	52	47	38	33	97	88	81	75	70	55	45	39	111	100	91	86	80	72	52	45
	36	60	53	49	45	42	38	-	-	83	66	60	56	52	47	38	-	98	88	71	66	62	55	45	39	111	101	92	86	71	64	52	45
	42	60	53	49	45	42	-	-	-	74	66	60	56	52	47	-	-	98	78	71	66	62	55	45	-	112	101	82	76	71	64	52	45
	48	60	53	49	-	-	-	-	-	74	66	60	56	52	-	-	-	87	78	71	66	62	55	-	-	112	89	82	76	71	64	52	-
	53	60	53	-	-	-	-	-	-	74	66	60	56	-	-	-	-	87	78	71	66	62	55	-	-	100	89	82	76	71	64	-	-
220	24	66	59	48	44	41	37	30	26	81	72	67	62	58	46	37	32	95	85	78	72	68	61	44	38	108	97	89	83	78	70	57	44
	30	58	52	48	44	41	37	30	-	81	73	59	54	51	46	37	32	95	86	79	73	68	54	44	38	108	97	89	84	78	70	51	44
	36	58	52	48	44	41	37	-	-	81	64	59	54	51	46	37	-	96	86	70	64	60	54	44	38	108	98	90	84	69	62	51	44
	42	58	52	48	44	-	-	-	-	72	64	59	54	51	46	-	-	96	76	70	64	60	54	44	-	110	98	80	74	69	62	51	44
	48	58	52	-	-	-	-	-	-	72	64	59	54	51	-	-	-	85	76	70	64	60	54	-	-	110	87	80	74	69	62	51	-
	52	58	52	-	-	-	-	-	-	72	64	59	54	-	-	-	-	85	76	70	64	60	54	-	-	97	87	80	74	69	62	-	-

NOTE: INTERPOLATE FOR HEADER SPANS AND REACTIONS BETWEEN THOSE SHOWN ON THIS SHEET.
FOR HEADER REACTION DETERMINATION AND END CONNECTION DETAILS/ANCHORS, SEE SCHEDULE E, SHEET 6 OF 12.

APPROVED AS COMPLYING WITH THE
SOUTH FLORIDA BUILDING CODE
DATE July 20, 2000
BY
PRODUCT CONTROL DIVISION
BUILDING CODE COMPLIANCE OFFICE
ACCEPTANCE NO. 00-0526.11

05/23/00 10:46

KNEZEVICH & ASSOCIATES, INC.
CONSULTING ENGINEERS • PRODUCT TESTING
1280 N. UNIVERSITY DRIVE, SUITE 180 • FORT LAUDERDALE, FL 33322
TEL: (954) 382-2600 • FAX: (954) 382-2989 • FLORIDA COA #3205
WEBSITE: WWW.KNEZEVICH.COM • E-MAIL: KA@KNEZEVICH.COM

COPYRIGHT © 2000 KNEZEVICH & ASSOCIATES, INC.

S-50 SYSTEM LICENSED BY SOUTHERN SHUTTER ASSOCIATION

SUPER 50
ROLL-UP SHUTTER
MIAMI HOME SHUTTERS INC.
1130 West 23rd Street
Hialeah, Florida 33010
Tel: (305) 885-4488 • Fax: (305) 887-4488

revisions			
no	date	by	description
1	03/15/00	VJK	COUNTY COMMENTS

SSA I.D.# 05230099349D

V.J. KNEZEVICH
PROFESSIONAL ENGINEER
FL License No:
PE 0010983

MAY 24 2000

date 11/29/99	
scale AS NOTED	drawn by MC
design by VJK	checked by VJK
drawing no. 00-917	
sheet 12 of 12	