MIAMI-DADE COUNTY, FLORIDA
METRO-DADE FLAGLER BUILDING

BUILDING CODE COMPLIANCE OFFICE
METRO-DADE FLAGLER BUILDING
140 WEST FLAGLER STREET, SUITE 1603
MIAMI, FLORIDA 33130-1563
(305) 375-2901 FAX (305) 375-2908

CONTRACTOR LICENSING SECTION
(305) 375-2527 FAX (305) 375-2558

CONTRACTOR ENFORCEMENT DIVISION
(305) 375-2966 FAX (305) 375-2908

PRODUCT CONTROL DIVISION
(305) 375-2902 FAX (305) 372-6339

PRODUCT CONTROL NOTICE OF ACCEPTANCE

Solatube International, Inc.
2210 Oak Ridge Way
Vista ,CA 92083-8341

Your application for Notice of Acceptance (NOA) of:
10"x14" Dome Skylights
under Chapter 8 of the Code of Miami-Dade County governing the use of Alternate Materials and Types of Construction, and completely described herein, has been recommended for acceptance by the Miami-Dade County Building Code Compliance Office (BCCO) under the conditions specified herein.

This NOA shall not be valid after the expiration date stated below. BCCO reserves the right to secure this product or material at any time from a jobsite or manufacturer's plant for quality control testing. If this product or material fails to perform in the approved manner, BCCO may revoke, modify, or suspend the use of such product or material immediately. BCCO reserves the right to revoke this approval, if it is determined by BCCO that this product or material fails to meet the requirements of the South Florida Building Code.

The expense of such testing will be incurred by the manufacturer.

ACCEPTANCE NO.: 00-0605.03
EXPIRES: 10/19/2003

Raul Rodriguez
Chief Product Control Division

THIS IS THE COVERSHEET, SEE ADDITIONAL PAGES FOR SPECIFIC AND GENERAL CONDITIONS
BUILDING CODE & PRODUCT REVIEW COMMITTEE

This application for Product Approval has been reviewed by the BCCO and approved by the Building Code and Product Review Committee to be used in Miami-Dade County, Florida under the conditions set forth above.

Francisco J. Quintana, R.A.
Director
Miami-Dade County
Building Code Compliance Office

APPROVED: 10/19/2000

Solatube International Inc.

ACCEPTANCE NO: 00-0605.03

APPROVED: OCT 1 9 2000

EXPIRES : OCT 1 9 2003

NOTICE OF ACCEPTANCE: SPECIFIC CONDITIONS

1. SCOPE

This approves a Tubular Skylight as described in Section 2 of this Notice of Acceptance, designed to comply with the South Florida Building Code, 1994 Edition for Miami-Dade County. For the locations where the pressure requirements, as determined by SFBC Chapter 23, do not exceed the Design Pressure Rating values indicated in the approved drawings.

2. PRODUCT DESCRIPTION

The **Solatube Tubular Skylight** and its components shall be constructed in strict compliance with the following documents: Drawing No.1009, sheets 6 through 6 of 6, titled "10 in. & 14 in. Dome Skylight (Dade County)", prepared by W. W. Schaefer Engineering & Consulting, P.A., dated 05/14/00, with no revisions. It bears the Miami-Dade County Product Control Approval stamp with the Notice of Acceptance number and approval date by the Miami-Dade County Product Control Division. These documents shall hereinafter be referred to as the approved drawings.

3. LIMITATIONS

All permanent set components must be protected against corrosion, contamination and damage at all times.

4. INSTALLATION

4.1 This Tubular Skylight must be installed in strict compliance with the approved drawings.

4.2 The installation of this unit **will not require** a hurricane protection system.

5. LABELING

Each unit shall bear a permanent label with the manufacturer's name or logo, city, state and the following statement: "Miami-Dade County Product Control Approved". The plastic shall be marked according to the requirements of Notice of Acceptance # 00-0718.02

6. BUILDING PERMIT REQUIREMENTS

6.1 Application for building permit shall be accompanied by copies of the following:

- **6.1.1** This Notice of Acceptance.
- **6.1.2** Duplicate copies of the approved drawings, as indicated in Section 2 of this Notice of Acceptance, clearly marked to show the components selected for the proposed installation.
- **6.1.3** Any other documents required by the Building Official or the South Florida Building Code (SFBC) in order to properly evaluate the installation of this system.

Candido F. Font P.E. – Senior Product Control Examiner
Product Control Division

Solatube International Inc.

ACCEPTANCE NO: 00-0605.03

APPROVED: OCT 1 9 2000

EXPIRES: OCT 1 9 2003

NOTICE OF ACCEPTANCE : STANDARD CONDITIONS

1. Renewal of this Acceptance (approval) shall be considered after a renewal application has been filed and the original submitted documentation, including test supporting data, engineering documents, are no older than eight (8) years.

2. Any and all approved products shall be permanently labeled with the manufacturer's name, city, state and the following statement: "Miami-Dade County Product Control Approved", or as specifically stated in the specific conditions of this Acceptance.

3. Renewals of Acceptance will not be considered if:
   a) There has been a change in the South Florida Building Code affecting the evaluation of this product and the product is not in compliance with the code changes;
   b) The product is no longer the same product (identical) as the one originally approved;
   c) If the Acceptance holder has not complied with all the requirements of this acceptance, including the correct installation of the product;
   d) The engineer, who originally prepared, signed and sealed the required documentation initially submitted, is no longer practicing the engineering profession.

4. Any revision or change in the materials, use, and/or manufacture of the product or process shall automatically be cause for termination of this Acceptance, unless prior written approval has been requested (through the filing of a revision application with appropriate fee) and granted by this office.

5. Any of the following shall also be grounds for removal of this Acceptance:
   a) Unsatisfactory performance of this product or process;
   b) Misuse of this Acceptance as an endorsement of any product, for sales, advertising or any other purpose.

6. The Notice of Acceptance number preceded by the words Dade County, Florida, and followed by the expiration date may be displayed in advertising literature. If any portion of the Notice of Acceptance is displayed, then it shall be done in its entirety.

7. A copy of this Acceptance as well as approved drawings and other documents, where it applies, shall be provided to the user by the manufacturer or its distributors and shall be available for inspection at the job site at all time. The engineer needs not reseal the copies.

8. Failure to comply with any section of this Acceptance shall be cause for termination and removal of Acceptance.

9. This Acceptance consists of pages 1, 2, and this last page 3.

END OF THIS ACCEPTANCE

Candido F. Font, P.E. – Senior Product Control Examiner
Product Control Division

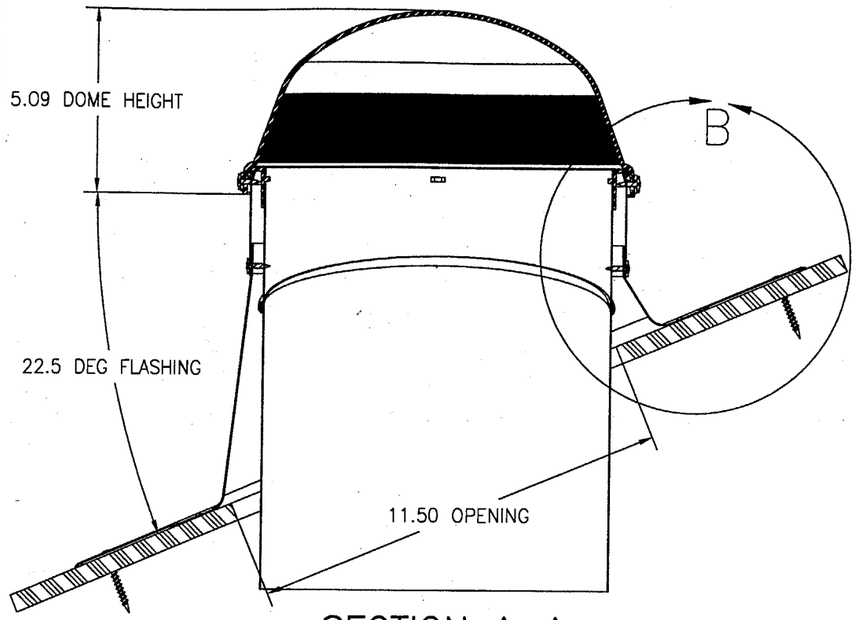

SECTION A–A

ITEM	QTY.	PART NO.	DESCRIPTION	MATERIAL/SPECIFICATION
1	1	501750	DOME (GLAZING)	POLYCARBONATE, 0.118" THICK, G.E. LEXAN 143 (10.875" O.D.)
2	1	400860	DOME RING	ABS, LUCKY HI–121WT0784
3	1	200650	FLASHING (22"X22" OCTAGON)	STEEL, A463 0.03" ALUMINIZED, PITCHED, 6 1/2" TO 2 1/2" TAPER
4	1	620010	WEATHER STRIPPING (DOME)	SCHLEGEL 8489–5011–2 POLYPROPYLENE, PILE, 34" LONG
5	4	700490	DOME SCREW	NO. 8 X 9/16" STEEL SCREW, TRUS PHIL SELF PIERCE W/DACROTIZED FINISH @ QUARTER POINTS OF DOME
6	4	–	WASHER	STEEL, NEOBOND
7	8	700480	FLASHING SCREW	NO. 10 X 2" TRUS PHIL W/DACROTIZED FINISH @ CORNERS OF OCTAGON
8	1	700280	SEALANT	POLYURETHANE, GEOCEL 3300
9	1	200500	TURRET EXTENSION	STEEL, 0.038" ALUMINIZED

ALLOWABLE DESIGN PRESSURE	
POSITIVE	NEGATIVE
80 PSF	80 PSF

GENERAL NOTES (ALL SHEETS)

1. THESE SKYLIGHT SYSTEMS HAVE BEEN TESTED, ANALYZED AND APPROVED FOR DESIGN PRESSURES NOT TO EXCEED THOSE SHOWN ON THESE DRAWINGS.
2. SHEATHING & SUPPORTING STRUCTURE MUST BE DESIGNED & INSTALLED TO WITHSTAND WIND LOADS AS DETERMINED FOR EA. APPLICATION.
3. ALL HARDWARE & FASTENERS SHALL BE IN ACCORDANCE WITH THESE DRAWINGS & MAY NOT VARY UNLESS SPECIFICALLY MENTIONED ON THE DRAWINGS.
4. THE DETAILS & SPECIFICATIONS SHOWN HEREIN REPRESENT THE PRODUCTS PROPOSED FOR WATER, AIR, IMPACT, CYCLIC & UNIFORM STATIC AIR PRESSURE TESTING IN CONFORMANCE WITH DADE COUNTY PROTOCOLS PA 201, 202 & 203.
5. ALL FLASHING TO SHEATHING FASTENERS MUST FULLY PENETRATE THE SHEATHING.
6. THESE SKYLIGHT SYSTEMS HAVE BEEN DESIGNED IN ACCORDANCE WITH THE SOUTH FLORIDA BUILDING CODE, 1994 EDITION.
7. THIS PRODUCT HAS BEEN TESTED IN ACCORDANCE WITH DADE COUNTY PROTOCOLS PA–201, PA–202 & PA–203 FOR LARGE MISSILE IMPACT, STRUCTURAL & CYCLIC TESTING.
8. ALL ROOFING DETAILS SHALL COMPLY WITH CHAPTER 34 OF THE SOUTH FLORIDA BUILDING CODE.
9. 4" MINIMUM DISTANCE IS REQUIRED FROM END OF DOME GLAZING TO ROOF SURFACE FOR SHINGLE OR BUR WITHOUT INSULATION. FOR INSULATION AND ROOF TILE, ADD TILE HEIGHT AND INSULATION THICKNESS TO THE 4" MINIMUM DISTANCE.

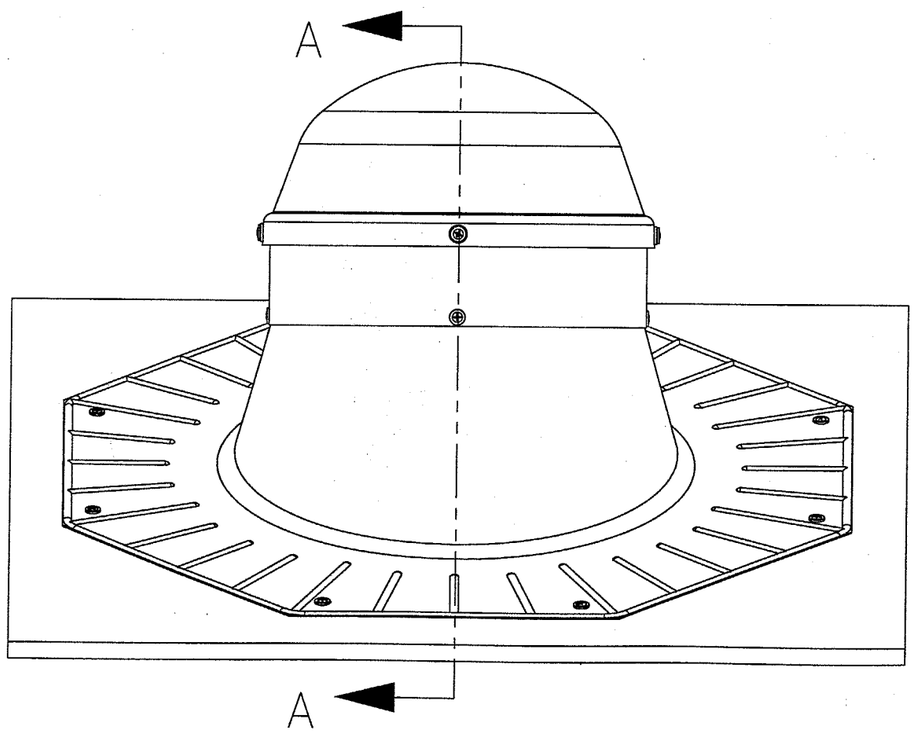

10" UNIT – 4" HIGH PITCHED METAL FLASHING

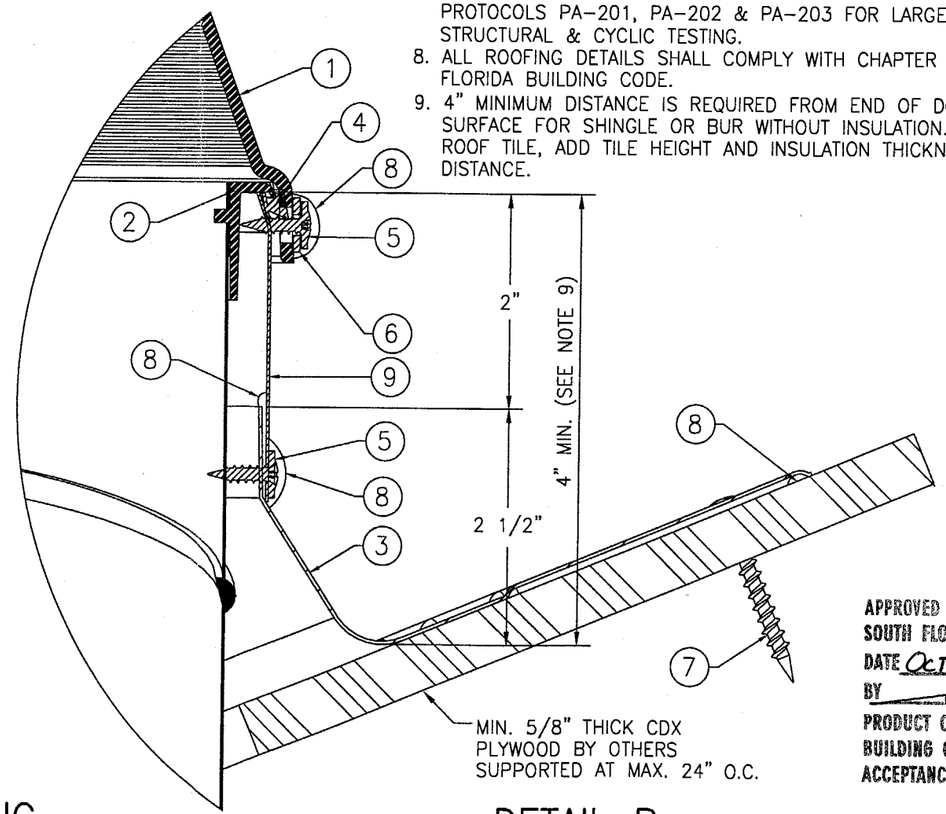

DETAIL B

APPROVED AS COMPLYING WITH THE SOUTH FLORIDA BUILDING CODE
DATE OCTOBER 19, 2000
BY
PRODUCT CONTROL DIVISION
BUILDING CODE COMPLIANCE OFFICE
ACCEPTANCE NO. 00-0605.03

DRAWN BY: W.W.S.	CHECKED BY: W.W.S.
PLOT: 1=4	DATE: 05/14/00

NO.	REVISION DESCRIPTION	BY	DATE

(DADE COUNTY)

DRAWING TITLE: 10" & 14" DOME SKYLIGHTS

MANUFACTURER: SOLATUBE INTERNATIONAL, INC.
2210 OAK RIDGE WAY
VISTA, CA 92083-8341
(760)597-4400

CONSULTANTS: W. W. SCHAEFER ENGINEERING & CONSULTING, P.A.
600 SANDTREE DRIVE; SUITE 203B
PALM BEACH GARDENS, FL 33403
PHONE: 561-775-4902 FAX: 561-775-4903

CERTIFICATION
SEP 25 2000
WARREN W. SCHAEFER, P.E.
P.E. NO. 44135

DRAWING NO. 1009 REV.

SHEET NO. 1 OF 6

ITEM	QTY.	PART NO.	DESCRIPTION	MATERIAL/SPECIFICATION
1	1	501750	DOME (GLAZING)	POLYCARBONATE, 0.118" THICK, G.E. LEXAN 143 (10.875" O.D.)
2	1	400860	DOME RING	ABS, LUCKY HI-121WT0784
3	1	200600	FLASHING (22"X22" OCTAGON)	STEEL, A463 0.03" ALUMINIZED, FLAT
4	1	620010	WEATHER STRIPPING (DOME)	SCHLEGEL 8489-5011-2 POLYPROPYLENE, PILE, 34" LONG
5	4	700490	DOME SCREW	NO. 8 X 9/16" STEEL SCREW, TRUS PHIL SELF PIERCE W/DACROTIZED FINISH @ QUARTER POINTS OF THE DOME
6	4	–	WASHER	STEEL, NEOBOND
7	8	700480	FLASHING SCREW	NO. 10 X 2" TRUS PHIL W/DACROTIZED FINISH @ CORNERS OF OCTAGON
8	1	700280	SEALANT	POLYURETHANE, GEOCEL 3300

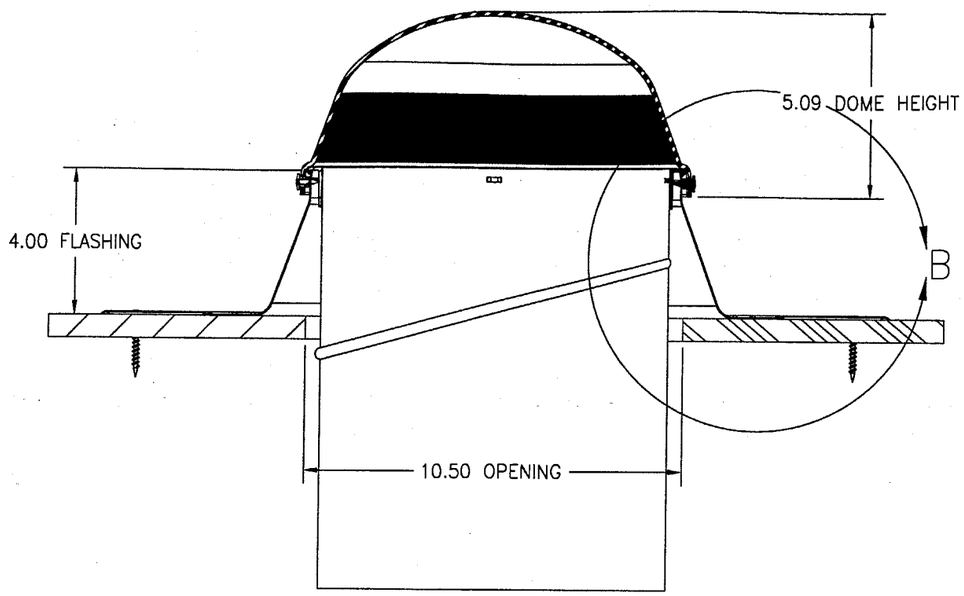

SECTION A–A

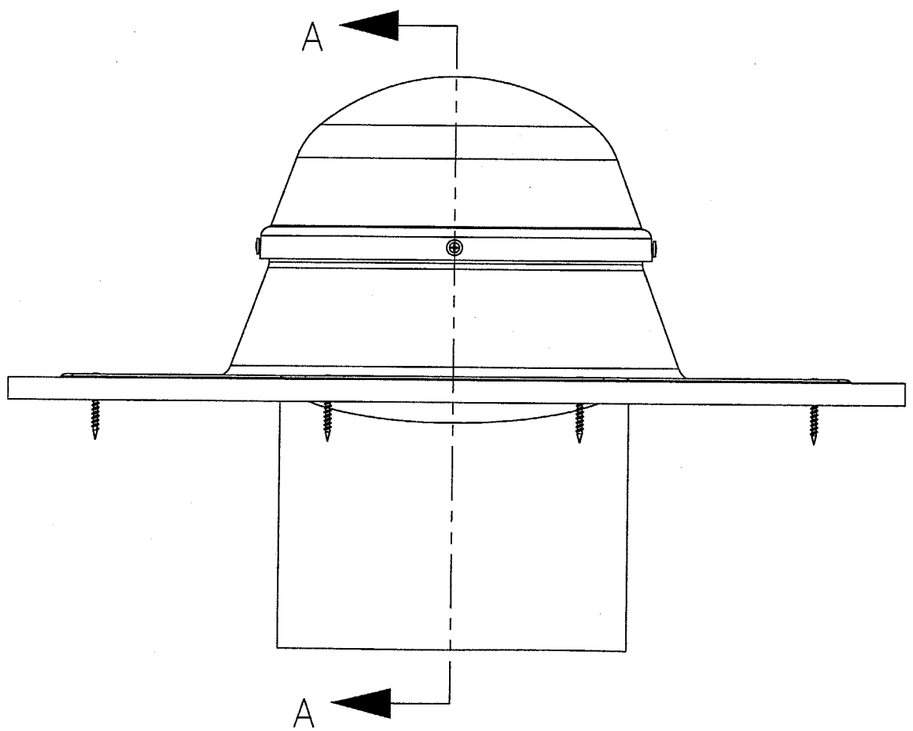

10" UNIT – 4" HIGH FLAT METAL FLASHING

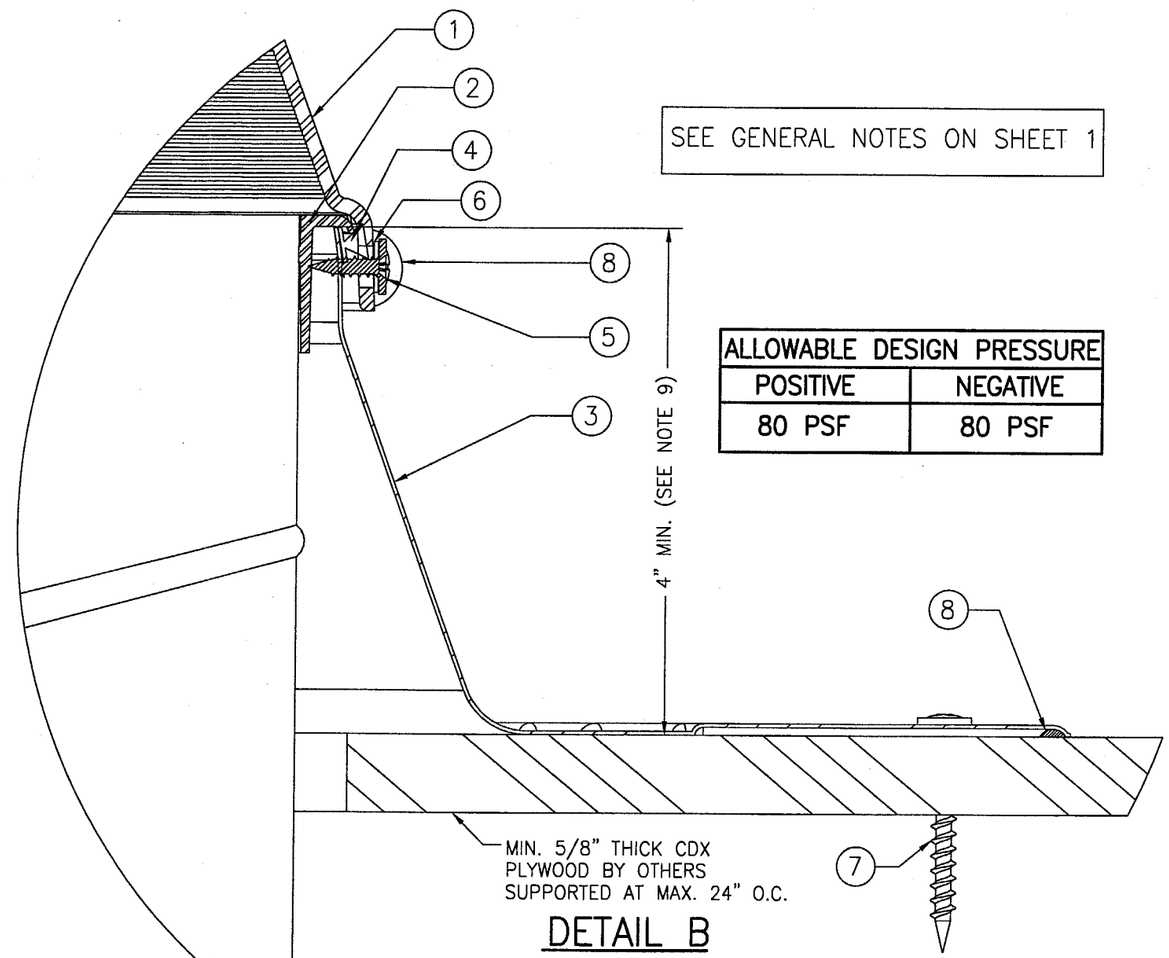

DETAIL B

SEE GENERAL NOTES ON SHEET 1

ALLOWABLE DESIGN PRESSURE	
POSITIVE	NEGATIVE
80 PSF	80 PSF

APPROVED AS COMPLYING WITH THE
SOUTH FLORIDA BUILDING CODE
DATE OCTOBER 19, 2000
BY
PRODUCT CONTROL DIVISION
BUILDING CODE COMPLIANCE OFFICE
ACCEPTANCE NO. 00-0605.03

DRAWN BY: W.W.S.	CHECKED BY: W.W.S.
PLOT: 1=4	DATE: 05/14/00

NO.	REVISION DESCRIPTION	BY	DATE

DRAWING TITLE
10" & 14" DOME SKYLIGHTS

MANUFACTURER
SOLATUBE INTERNATIONAL, INC.
2210 OAK RIDGE WAY
VISTA, CA 92083-8341
(760)597-4400

CONSULTANTS
W. W. SCHAEFER ENGINEERING & CONSULTING, P.A.
600 SANDTREE DRIVE; SUITE 203B
PALM BEACH GARDENS, FL 33403
PHONE: 561-775-4902 FAX: 561-775-4903

CERTIFICATION
SEP 25 2000
WARREN W. SCHAEFER, P.E.
P.E. NO. 44135

DRAWING NO. 1009
REV.

SHEET NO. 2 OF 6

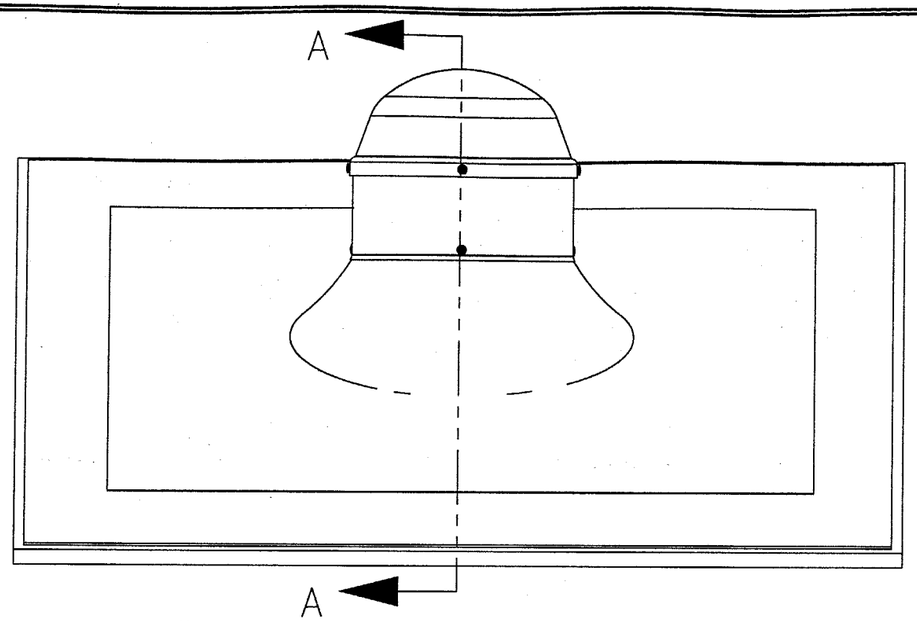

10" UNIT – PITCHED TILE FLASHING (FLAT DOME)

SEE GENERAL NOTES ON SHEET 1

ALLOWABLE DESIGN PRESSURE	
POSITIVE	NEGATIVE
80 PSF	80 PSF

ITEM	QTY.	PART NO.	DESCRIPTION	MATERIAL/SPECIFICATION
1	1	501760	DOME (GLAZING)	POLYCARBONATE, 0.118" THICK, G.E. LEXAN 143, 10.875" O.D.
2	1	400860	DOME RING	ABS, LUCKY HI-121WT0784
3	1	200650	FLASHING (22"X22" OCTAGON)	STEEL, A463 0.03" ALUMINIZED, PITCHED, 6 1/2" TO 2 1/2" TAPER
4	1	620010	WEATHER STRIPPING (DOME)	SCHLEGEL 8489-5011-2 POLYPROPYLENE, PILE, 34" LONG
5	4	700490	DOME SCREW	NO. 8 X 9/16" STEEL SCREW, TRUS PHIL SELF PIERCE W/DACROTIZED FINISH AT QUARTER POINTS OF THE DOME
6	4	–	WASHER	STEEL, NEOBOND
7	8	700480	FLASHING SCREW	NO. 10 X 2" TRUS PHIL W/DACROTIZED FINISH @ OCTAGON CORNERS
8	1	700280	SEALANT	POLYURETHANE, GEOCEL 3300
9	1	520010	EXTENSION FOR TILE	STEEL, 0.038" ALUMINIZED
10	1	501770	HYPALON	CSPE, 45 MIL. MEMBRANE (SEE NOTE ON THIS SHEET)
11	1	501780	1/8" THK. BUTYL TAPE 3" WIDE	ADHERES HYPALON TO TOP OF ROOF TILE (SEE NOTE ON THIS SHEET)

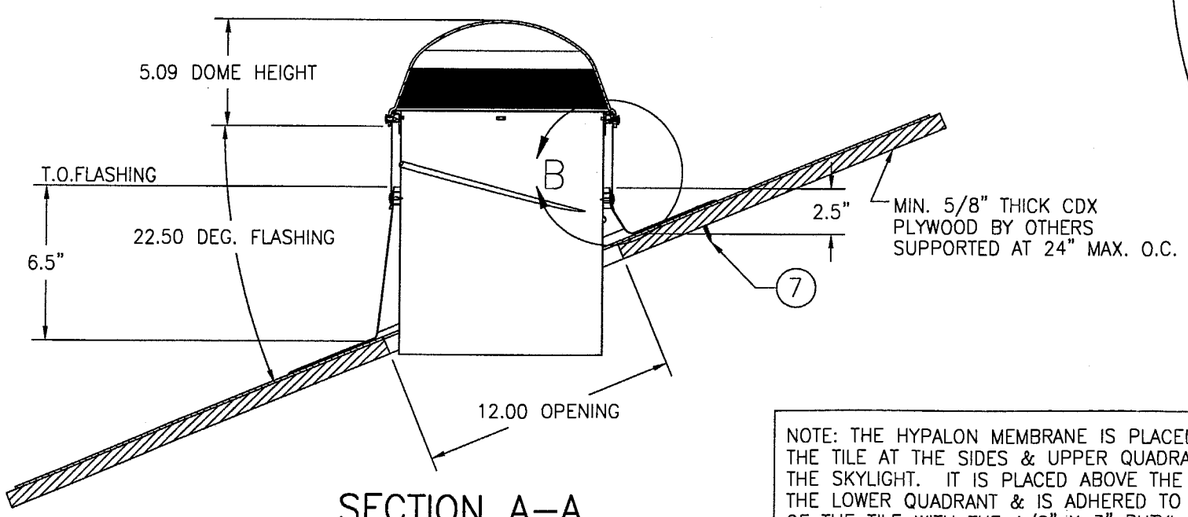

SECTION A–A

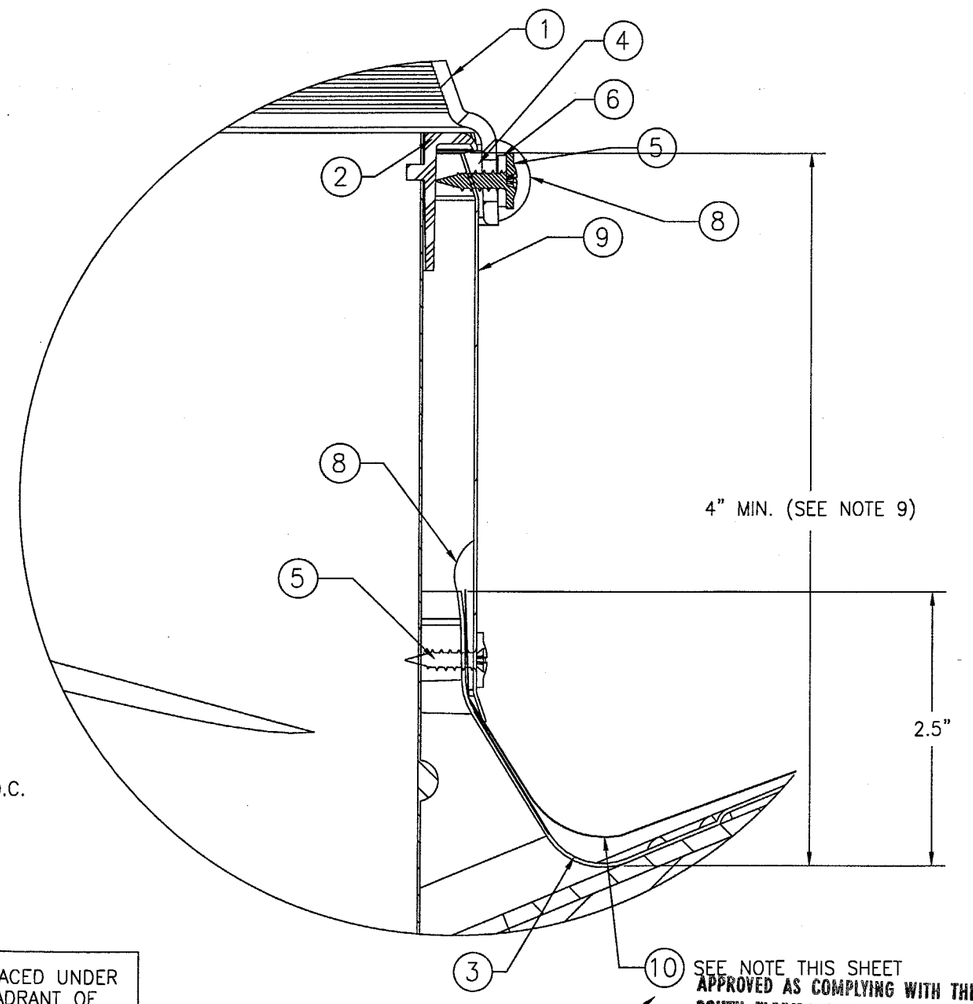

SEE NOTE THIS SHEET

DETAIL B

NOTE: THE HYPALON MEMBRANE IS PLACED UNDER THE TILE AT THE SIDES & UPPER QUADRANT OF THE SKYLIGHT. IT IS PLACED ABOVE THE TILE AT THE LOWER QUADRANT & IS ADHERED TO THE TOP OF THE TILE WITH THE 1/8" X 3" BUTYL TAPE. THIS MEMBRANE IS USED AS A FIRE RETARDER & WATER DIVERTER.

APPROVED AS COMPLYING WITH THE SOUTH FLORIDA BUILDING CODE
DATE OCTOBER 19, 2000
BY
PRODUCT CONTROL DIVISION
BUILDING CODE COMPLIANCE OFFICE
ACCEPTANCE NO. 00-0605.03

DRAWN BY: W.W.S.	CHECKED BY: W.W.S.
PLOT: 1=4	DATE: 05/14/00

NO.	REVISION DESCRIPTION	BY	DATE

DRAWING TITLE: 10" & 14" DOME SKYLIGHTS

MANUFACTURER: SOLATUBE INTERNATIONAL, INC.
2210 OAK RIDGE WAY
VISTA, CA 92083-8341
(760)597-4400

CONSULTANTS: W. W. SCHAEFER ENGINEERING & CONSULTING, P.A.
600 SANDTREE DRIVE; SUITE 203B
PALM BEACH GARDENS, FL 33403
PHONE: 561-775-4902 FAX: 561-775-4903

CERTIFICATION: SEP 25 2000
WARREN W. SCHAEFER, P.E.
P.E. NO. 44135

DRAWING NO. 1009 REV.

SHEET NO. 3 OF 6

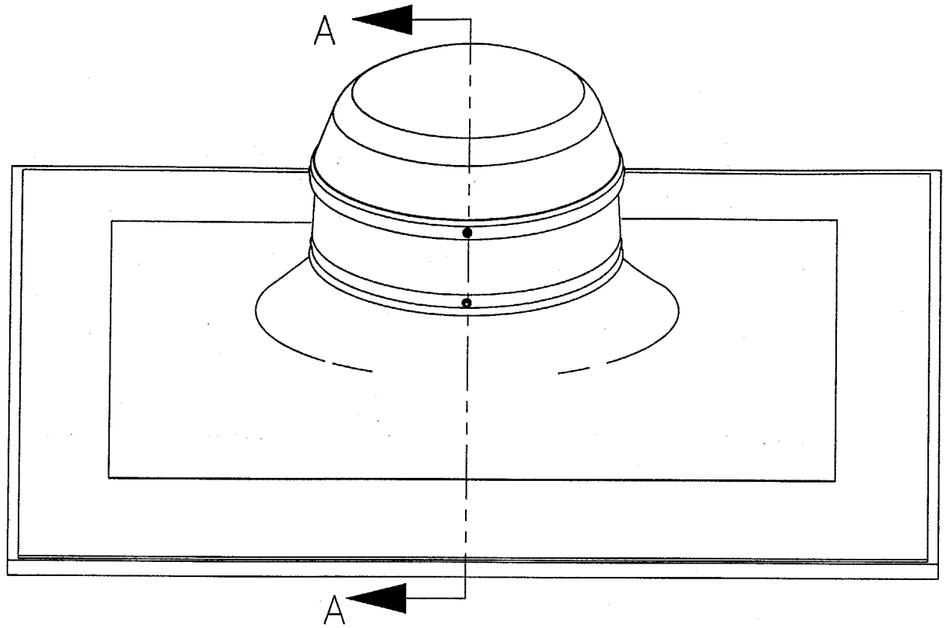

ITEM	QTY.	PART NO.	DESCRIPTION	MATERIAL/SPECIFICATION
1	1	501760	DOME (GLAZING)	POLYCARBONATE, 0.118" THICK, G.E. LEXAN 143 (10.875" O.D.)
2	1	400860	DOME RING	ABS, LUCKY HI-121WT0784
3	1	200650	FLASHING (22"X22" OCTAGON)	STEEL, A463 0.03" ALUMINIZED
4	1	620010	WEATHER STRIPPING (DOME)	SCHLEGEL 8489-5011-2 POLYPROPYLENE, PILE, 34" LONG
5	4	700490	DOME SCREW	NO. 8 X 9/16" STEEL SCREW, TRUS PHIL SELF PIERCE W/DACROTIZED FINISH @ QUARTER POINTS OF DOME
6	4	–	WASHER	STEEL, NEOBOND
7	8	700480	FLASHING SCREW	NO. 10 X 2" TRUS PHIL W/DACROTIZED FINISH @ CORNERS OF OCTAGON
8	1	700280	SEALANT	POLYURETHANE, GEOCEL 3300
9	1	520010	EXTENSION FOR TILE	STEEL, 0.038" ALUMINIZED
10	1	501770	HYPALON	CSPE, 45 MIL. MEMBRANE (SEE NOTE ON THIS SHEET)
11	1	501780	1/8" THK. BUTYL TAPE 3" WIDE	ADHERES HYPALON TO TOP OF ROOF TILE (SEE NOTE ON THIS SHEET)

10" UNIT – PITCHED TILE FLASHING (SLOPED DOME)

ALLOWABLE DESIGN PRESSURE	
POSITIVE	NEGATIVE
80 PSF	80 PSF

SEE GENERAL NOTES ON SHEET 1

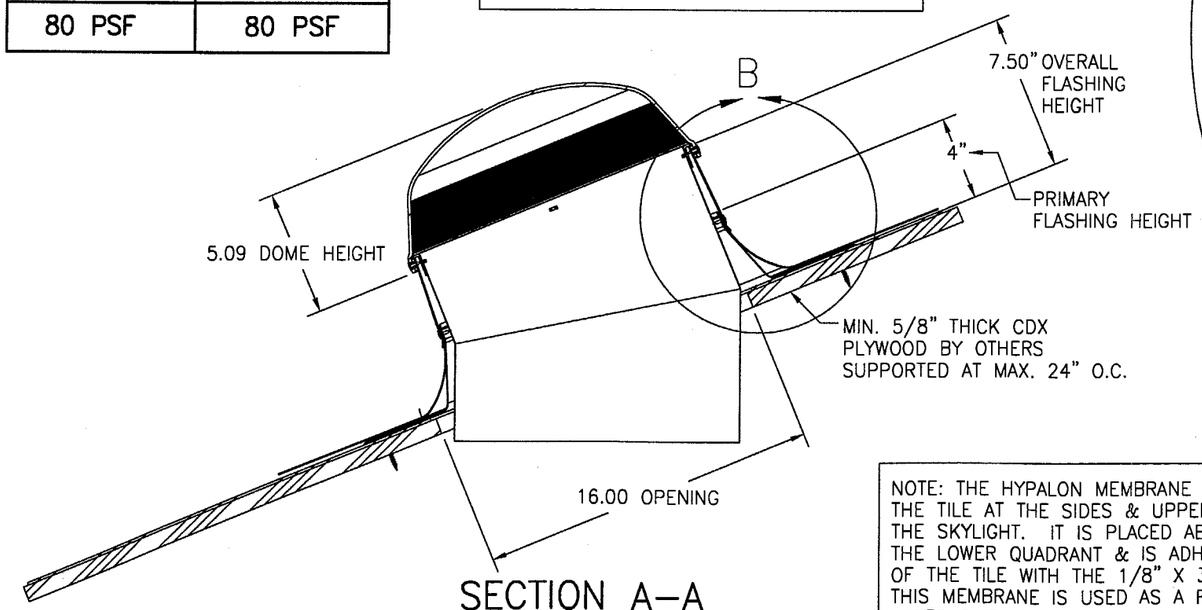

SECTION A–A

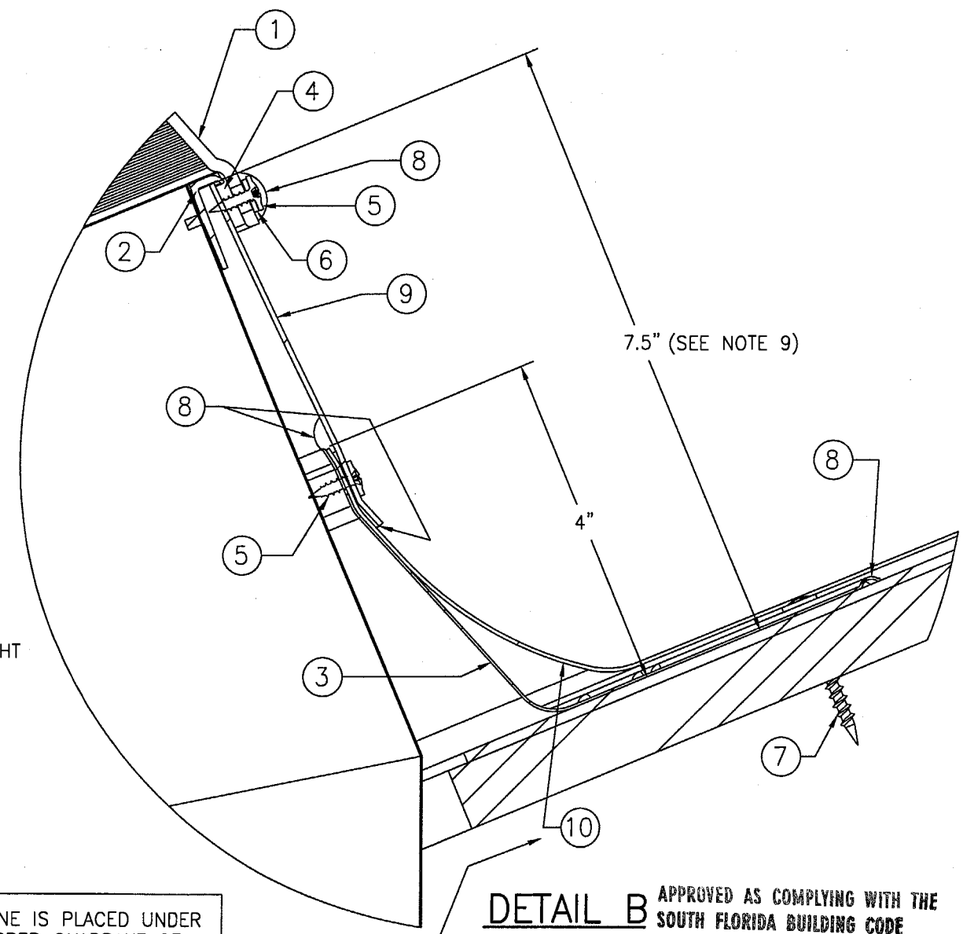

DETAIL B

NOTE: THE HYPALON MEMBRANE IS PLACED UNDER THE TILE AT THE SIDES & UPPER QUADRANT OF THE SKYLIGHT. IT IS PLACED ABOVE THE TILE AT THE LOWER QUADRANT & IS ADHERED TO THE TOP OF THE TILE WITH THE 1/8" X 3" BUTYL TAPE. THIS MEMBRANE IS USED AS A FIRE RETARDER & WATER DIVERTER.

APPROVED AS COMPLYING WITH THE SOUTH FLORIDA BUILDING CODE
DATE OCTOBER 19, 2000
BY
PRODUCT CONTROL DIVISION
BUILDING CODE COMPLIANCE OFFICE
ACCEPTANCE NO. 00-0605.03

DRAWN BY: W.W.S.	CHECKED BY: W.W.S.
PLOT: 1=4	DATE: 05/14/00

NO.	REVISION DESCRIPTION	BY	DATE

DRAWING TITLE: 10" & 14" DOME SKYLIGHTS

MANUFACTURER: SOLATUBE INTERNATIONAL, INC.
2210 OAK RIDGE WAY
VISTA, CA 92083-8341
(760)597-4400

CONSULTANTS: W. W. SCHAEFER ENGINEERING & CONSULTING, P.A.
800 SANDTREE DRIVE; SUITE 203B
PALM BEACH GARDENS, FL 33403
PHONE: 561-775-4902 FAX: 561-775-4903

CERTIFICATION
SEP 25 2000
WARREN W. SCHAEFER, P.E.
P.E. NO. 44135

DRAWING NO. 1009 REV.

SHEET NO. 4 OF 6

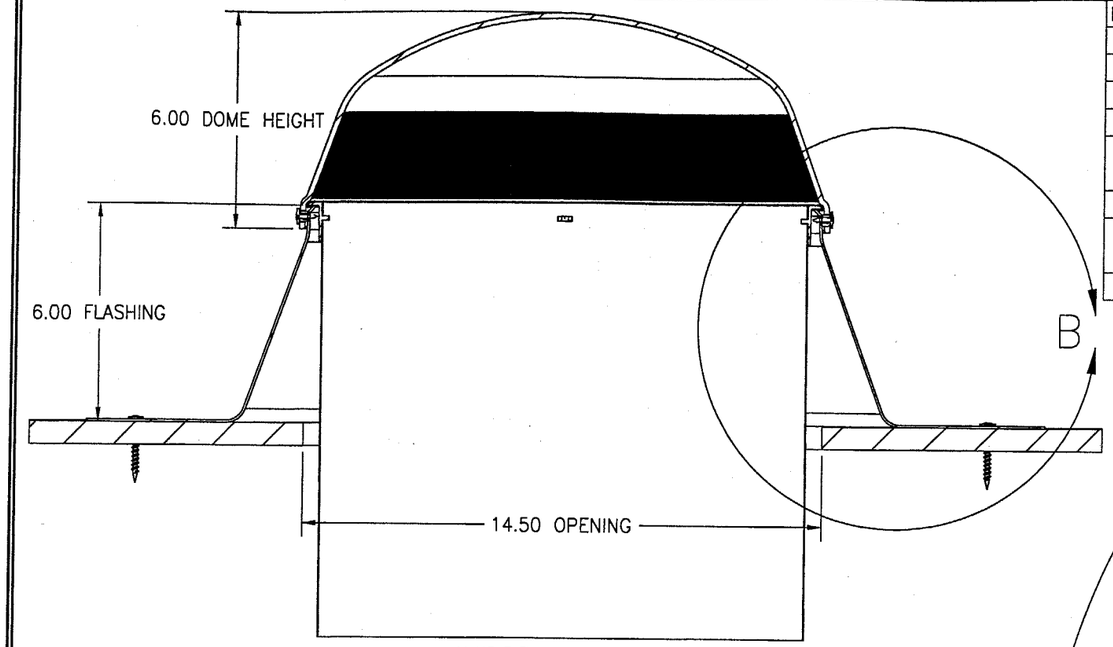

SECTION A–A

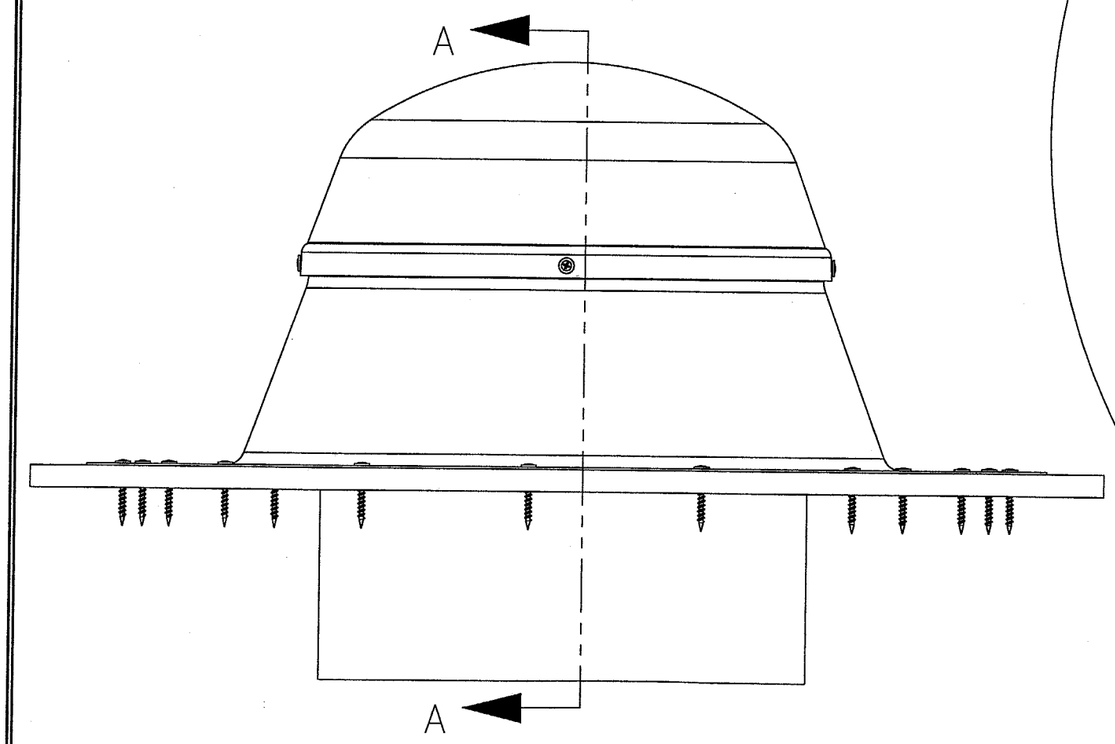

14" UNIT – 6" HIGH FLAT ALUMINUM FLASHING

ITEM	QTY.	PART NO.	DESCRIPTION	MATERIAL/SPECIFICATION
1	1	501750	DOME (GLAZING)	POLYCARBONATE, 0.118" THICK, G.E. LEXAN 143 (14.832" O.D.)
2	1	400750	DOME RING	ABS, LUCKY HI-121WT0784
3	1	200430	FLASHING	0.06" THK. A93003 ALUMINUM MANGANESE 26.77" DIAMETER
4	1	620050	WEATHER STRIPPING (DOME)	SCHLEGEL 8489-5011-2 POLYPROPYLENE, PILE, 46.5" LONG
5	4	700490	DOME SCREW	NO. 8 X 9/16" STEEL SCREW, TRUS PHIL SELF PIERCE W/DACROTIZED FINISH @ QUARTER POINTS OF THE DOME
6	4	–	WASHER	STEEL, NEOBOND
7	16	700480	FLASHING SCREW	NO. 10 X 2" TRUS PHIL W/DACROTIZED FINISH AT EQUAL SPACING AROUND FLASHING PERIMETER
8	1	700280	SEALANT	POLYURETHANE, GEOCEL 3300

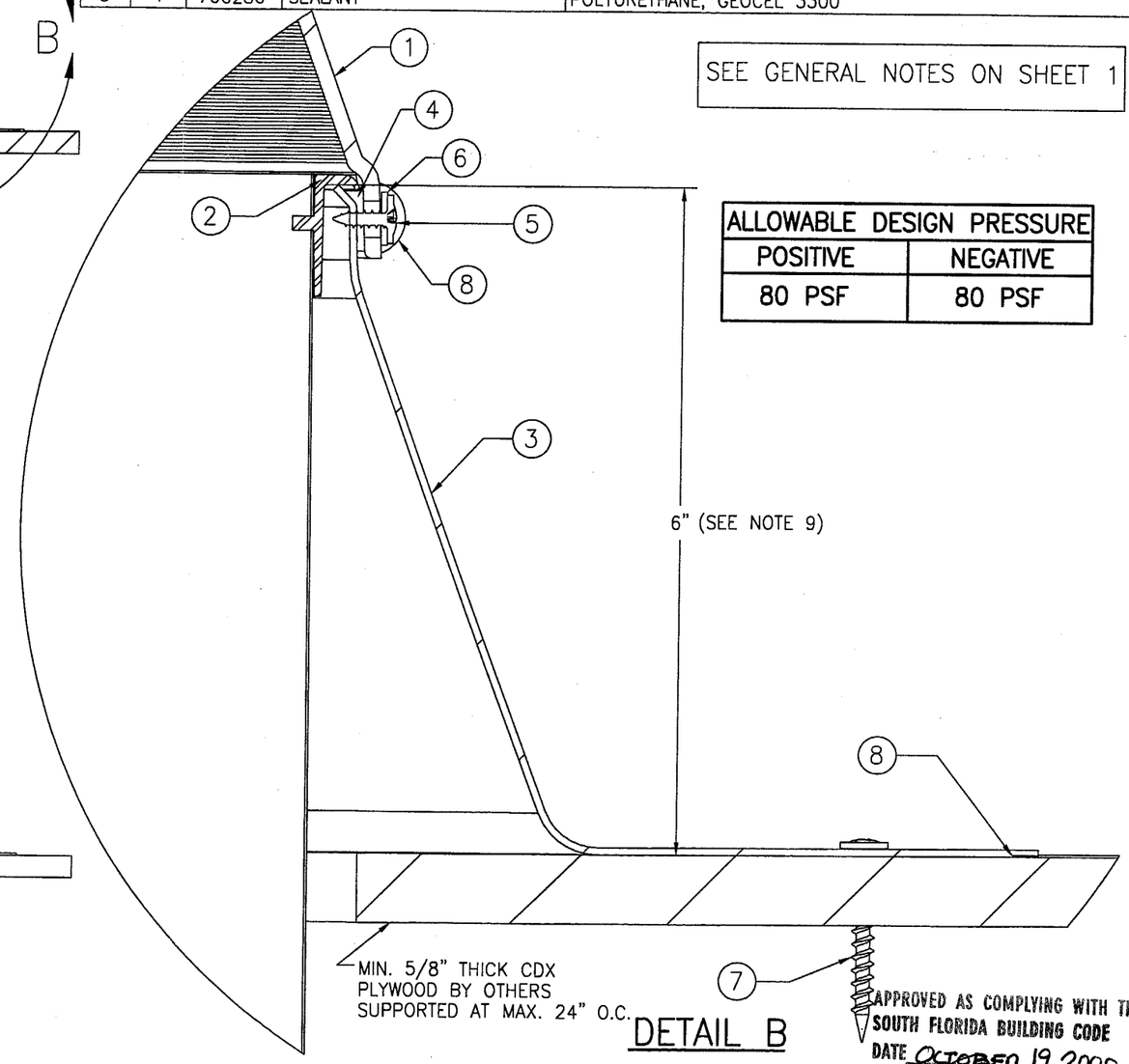

DETAIL B

SEE GENERAL NOTES ON SHEET 1

ALLOWABLE DESIGN PRESSURE	
POSITIVE	NEGATIVE
80 PSF	80 PSF

APPROVED AS COMPLYING WITH THE SOUTH FLORIDA BUILDING CODE
DATE OCTOBER 19, 2000
BY
PRODUCT CONTROL DIVISION
BUILDING CODE COMPLIANCE OFFICE
ACCEPTANCE NO. 00-0605.03

DRAWN BY: W.W.S.	CHECKED BY: W.W.S.
PLOT: 1=4	DATE: 05/14/00

NO.	REVISION DESCRIPTION	BY	DATE

DRAWING TITLE
10" & 14" DOME SKYLIGHTS

MANUFACTURER
SOLATUBE INTERNATIONAL, INC.
2210 OAK RIDGE WAY
VISTA, CA 92083-8341
(760)597-4400

CONSULTANTS
W. W. SCHAEFER ENGINEERING & CONSULTING, P.A.
600 SANDTREE DRIVE; SUITE 203B
PALM BEACH GARDENS, FL 33403
PHONE: 561-775-4902 FAX: 561-775-4903

CERTIFICATION
SEP 25 2000
WARREN W. SCHAEFER, P.E.
P.E. NO. 44135

DRAWING NO. 1009
REV.

SHEET NO. 5 OF 6

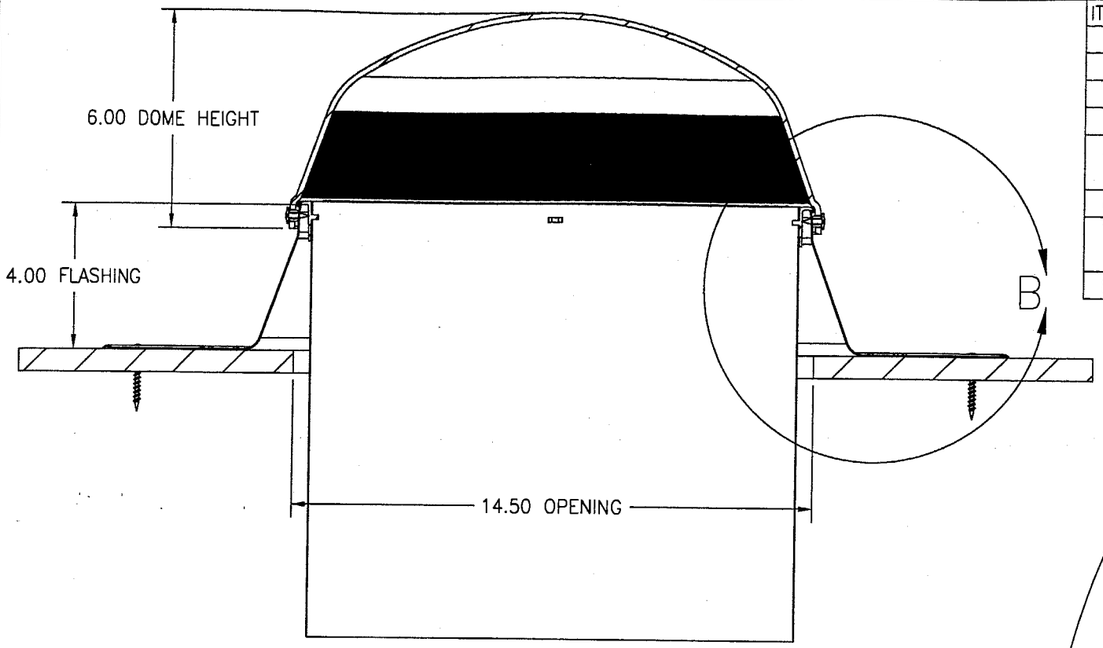

SECTION A–A

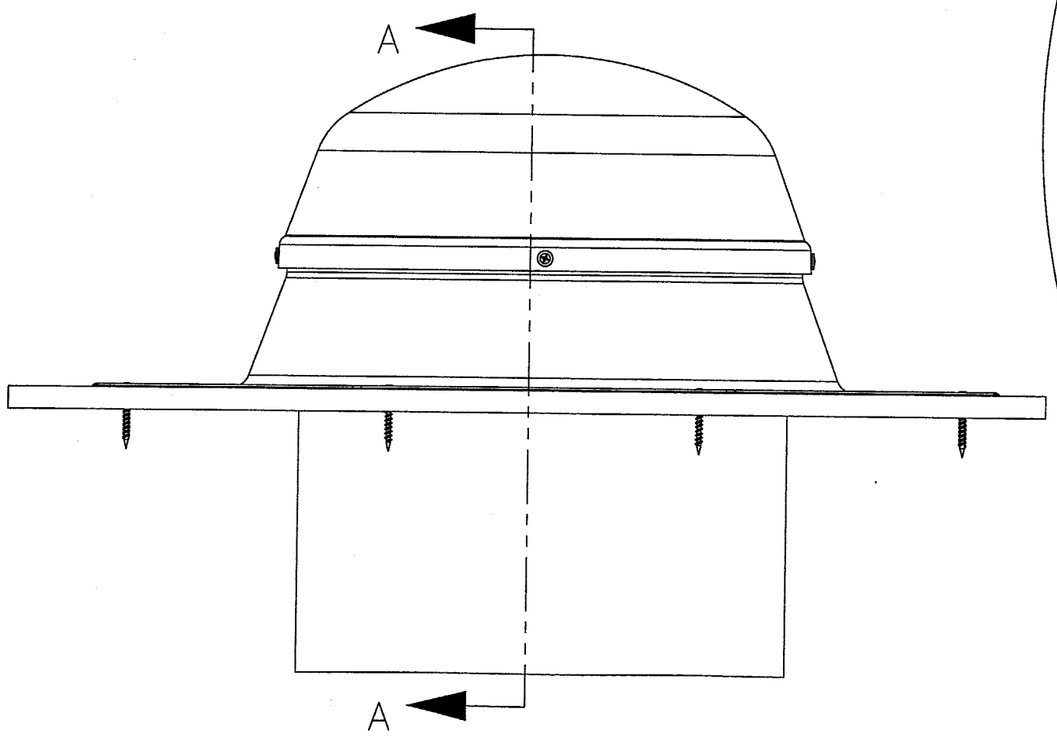

14" UNIT – 4" HIGH FLAT METAL FLASHING

ITEM	QTY.	PART NO.	DESCRIPTION	MATERIAL/SPECIFICATION
1	1	501400	DOME (GLAZING)	POLYCARBONATE, 0.118" THICK, G.E. LEXAN 143 (14.832" O.D.
2	1	400750	DOME RING	ABS, LUCKY HI-121WT0784
3	1	200570	FLASHING (25"X25" OCTAGON)	0.03" A463 STEEL, ALUMINIZED, FLAT
4	1	620050	WEATHER STRIPPING (DOME)	SCHLEGEL 8489-5011-2 POLYPROPYLENE, PILE, 46.5" LONG
5	4	700490	DOME SCREW	NO. 8 X 9/16" STEEL SCREW, TRUS PHIL SELF PIERCE W/DACROTIZED FINISH @ CORNER POINTS OF DOME
6	4	–	WASHER	STEEL, NEOBOND
7	8	700480	FLASHING SCREW	NO. 10 X 2" TRUS PHIL W/DACROTIZED FINISH @ CORNERS OF OCTAGON
8	1	700280	SEALANT	POLYURETHANE, GEOCEL 3300

SEE GENERAL NOTES ON SHEET 1

ALLOWABLE DESIGN PRESSURE	
POSITIVE	NEGATIVE
80 PSF	80 PSF

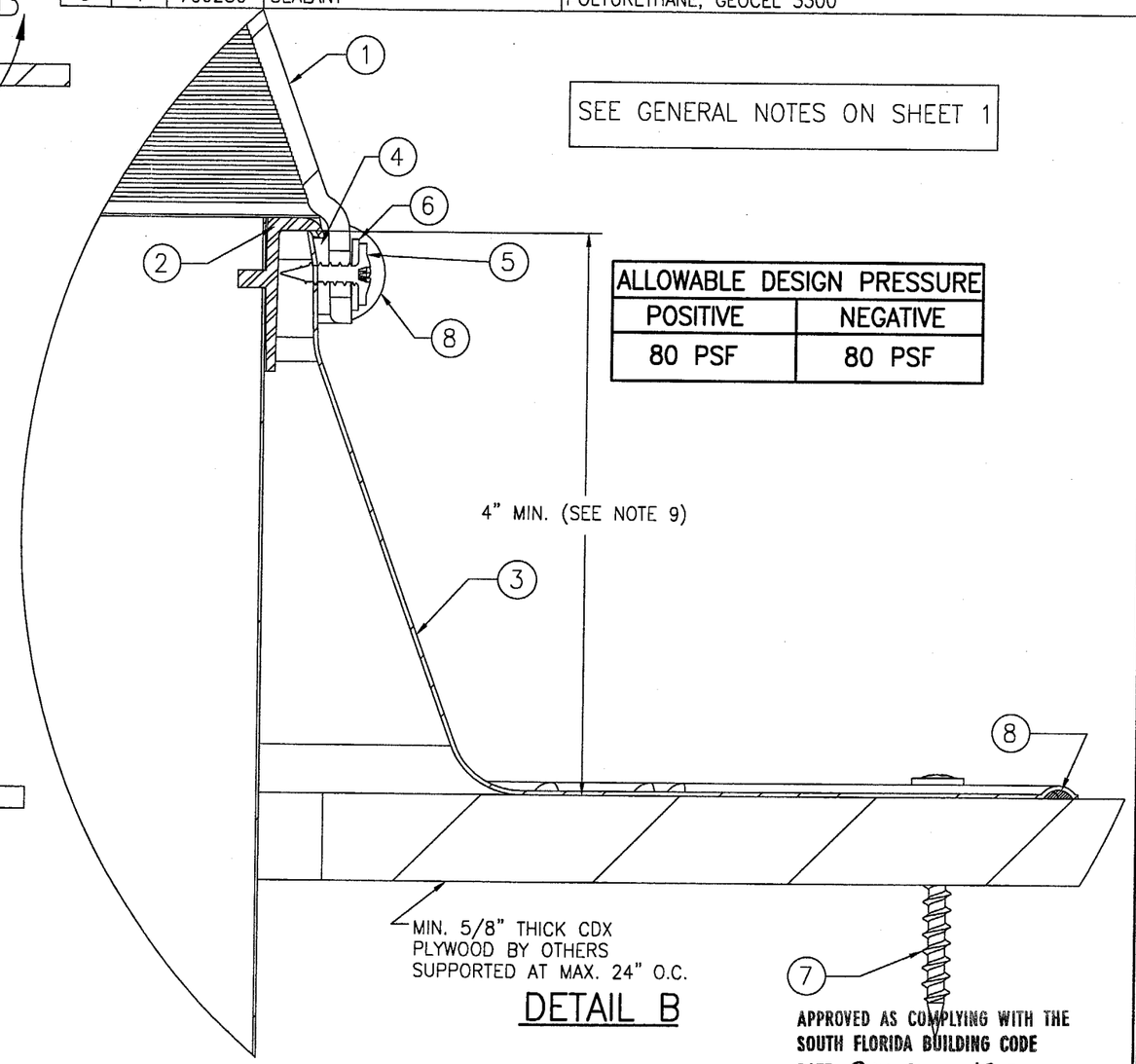

DETAIL B

APPROVED AS COMPLYING WITH THE
SOUTH FLORIDA BUILDING CODE
DATE OCTOBER 19, 2000
BY
PRODUCT CONTROL DIVISION
BUILDING CODE COMPLIANCE OFFICE
ACCEPTANCE NO. 00-0605.03

DRAWN BY: W.W.S.	CHECKED BY: W.W.S.
PLOT: 1=4	DATE: 05/14/00

NO.	REVISION DESCRIPTION	BY	DATE

DRAWING TITLE
10" & 14" DOME SKYLIGHTS

MANUFACTURER
SOLATUBE INTERNATIONAL, INC.
2210 OAK RIDGE WAY
VISTA, CA 92083-8341
(760)597-4400

CONSULTANTS
W. W. SCHAEFER ENGINEERING & CONSULTING, P.A.
600 SANDTREE DRIVE; SUITE 203B
PALM BEACH GARDENS, FL 33403
PHONE: 561-775-4902 FAX: 561-775-4903

CERTIFICATION
SEP 25 2000
WARREN W. SCHAEFER, P.E.
P.E. NO. 44135

DRAWING NO. 1009
REV.
SHEET NO. 6 OF 6