MIAMI-DADE

MIAMI-DADE COUNTY, FLORIDA
METRO-DADE FLAGLER BUILDING

BUILDING CODE COMPLIANCE OFFICE
METRO-DADE FLAGLER BUILDING
140 WEST FLAGLER STREET, SUITE 1603
MIAMI, FLORIDA 33130-1563
(305) 375-2901 FAX (305) 375-2908

CONTRACTOR LICENSING SECTION
(305) 375-2527 FAX (305) 375-2558

CONTRACTOR ENFORCEMENT DIVISION
(305) 375-2966 FAX (305) 375-2908

PRODUCT CONTROL DIVISION
(305) 375-2902 FAX (305) 372-6339

PRODUCT CONTROL NOTICE OF ACCEPTANCE

Foreline Security
8419 Sunstate Street
Tampa ,FL 33634

Your application for Notice of Acceptance (NOA) of:
"Ultra Vision" Aluminum Fixed Window
under Chapter 8 of the Code of Miami-Dade County governing the use of Alternate Materials and Types of Construction, and completely described herein, has been recommended for acceptance by the Miami-Dade County Building Code Compliance Office (BCCO) under the conditions specified herein.

This NOA shall not be valid after the expiration date stated below. BCCO reserves the right to secure this product or material at any time from a jobsite or manufacturer's plant for quality control testing. If this product or material fails to perform in the approved manner, BCCO may revoke, modify, or suspend the use of such product or material immediately. BCCO reserves the right to revoke this approval, if it is determined by BCCO that this product or material fails to meet the requirements of the South Florida Building Code.

The expense of such testing will be incurred by the manufacturer.

ACCEPTANCE NO.: 00-0605.04
EXPIRES: 09/04/2003

Raul Rodriguez
Chief Product Control Division

THIS IS THE COVERSHEET, SEE ADDITIONAL PAGES FOR SPECIFIC AND GENERAL CONDITIONS
BUILDING CODE & PRODUCT REVIEW COMMITTEE

This application for Product Approval has been reviewed by the BCCO and approved by the Building Code and Product Review Committee to be used in Miami-Dade County, Florida under the conditions set forth above.

Francisco J. Quintana, R.A.
Director
Miami-Dade County
Building Code Compliance Office

APPROVED: 10/12/2000

Foreline Security

ACCEPTANCE No.: 00-0605.04

APPROVED : OCT 1 2 2000

EXPIRES : September 04, 2003

NOTICE OF ACCEPTANCE: SPECIFIC CONDITIONS

1. SCOPE

1.1 This **renews** the Notice of Acceptance No. 97-0306.05 that was issued on September 04, 1997. It approves an aluminum fixed window, as described in Section 2 of this Notice of Acceptance, designed to comply with the South Florida Building Code (SFBC), 1994 Edition for Miami-Dade County. For the locations where the pressure requirements, as determined by SFBC Chapter 23, do not exceed the Design Pressure Rating values indicated in the approved drawings.

2. PRODUCT DESCRIPTION

2.1 The **"Ultra Vision" Aluminum Fixed Window – Impact Resistant,** and its components shall be constructed in strict compliance with the following documents: Drawing No **DW-00350** sheet 1 and 2 of 2, titled "#1836-AA Drive-Up Vision Window," dated on 05/30/97, revised on 09/21/00, prepared by Jerry Austin, P.E. They bear the Miami-Dade County Product Control approval stamp with the Notice of Acceptance number and approval date by the Miami-Dade County Product Control Division. These documents shall hereinafter be referred to as the approved drawings.

3. LIMITATIONS

3.1 This approval applies to single unit applications, as shown approved drawings.

4. INSTALLATION

4.1 The aluminum fixed window and its components shall be installed in strict compliance with the approved drawings.

4.2 Hurricane protection system (shutters): The installation of this unit **will not require** a hurricane protective system.

5. LABELING

5.1 Each unit shall bear a permanent label with the manufacturer's name or logo, city, state and following statement: "Miami-Dade County Product Control Approved".

6. BUILDING PERMIT REQUIREMENTS

6.1 Application for building permit shall be accompanied by copies of the following:

- **6.1.1** This Notice of Acceptance
- **6.1.2** Duplicate copies of the approved drawings, as identified in Section 2 of this Notice of Acceptance, clearly marked to show the components selected for the proposed installation.
- **6.1.3** Any other documents required by the Building Official or the South Florida Building Code (SFBC) in order to properly evaluate the installation of this system.

Manuel Perez

Manuel Perez, P.E. Product Control Examiner
Product Control Division

Foreline Security

ACCEPTANCE No.: 00-0605.04

APPROVED : OCT 1 2 2000

EXPIRES : September 04, 2003

NOTICE OF ACCEPTANCE: STANDARD CONDITIONS

1. Renewal of this Acceptance (approval) shall be considered after a renewal application has been filed and the original submitted documentation, including test supporting data, engineering documents, are no older than eight (8) years.

2. Any and all approved products shall be permanently labeled with the manufacturer's name, city, state, and the following statement: "Miami-Dade County Product Control Approved", or as specifically stated in the specific conditions of this Acceptance.

3. Renewals of Acceptance will not be considered if:
   a) There has been a change in the South Florida Building Code affecting the evaluation of this product and the product is not in compliance with the code changes;
   b) The product is no longer the same product (identical) as the one originally approved;
   c) If the Acceptance holder has not complied with all the requirements of this acceptance, including the correct installation of the product;
   d) The engineer who originally prepared, signed and sealed the required documentation initially submitted is no longer practicing the engineering profession.

4. Any revision or change in the materials, use, and/or manufacture of the product or process shall automatically be cause for termination of this Acceptance, unless prior written approval has been requested (through the filing of a revision application with appropriate fee) and granted by this office.

5. Any of the following shall also be grounds for removal of this Acceptance:
   a) Unsatisfactory performance of this product or process.
   b) Misuse of this Acceptance as an endorsement of any product, for sales, advertising or any other purpose.

6. The Notice of Acceptance number preceded by the words Miami-Dade County, Florida, and followed by the expiration date may be displayed in advertising literature. If any portion of the Notice of Acceptance is displayed, then it shall be done in its entirety.

7. A copy of this Acceptance as well as approved drawings and other documents, where it applies, shall be provided to the user by the manufacturer or its distributors and shall be available for inspection at the job site at all time. The engineer need not reseal the copies.

8. Failure to comply with any section of this Acceptance shall be cause for termination and removal of Acceptance.

9. This Notice of Acceptance consists of pages 1, 2 and this last page 3.

Manuel Perez

Manuel Perez, P. E., Product Control Examiner
Product Control Division

END OF THIS ACCEPTANCE

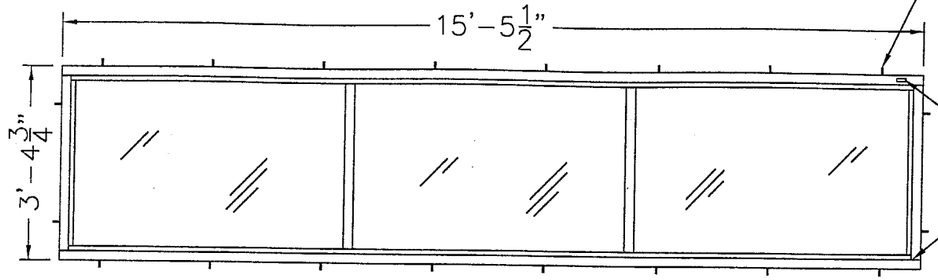

ANCHORS
1/4" DIA. TAPCON ANCHOR SCREWS W/ 3 1/4"L, IN 8" FROM EDGE & 24" O.C.

LABEL
5/8" X 2 1/2"

FRAME TO BE CUT SQUARE & CONTINUOUS; WELD @ EACH CORNER

INTERIOR ELEVATION

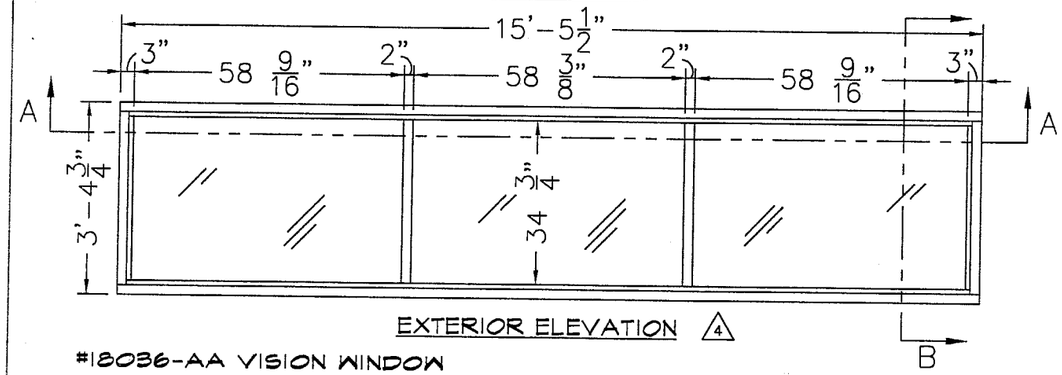

EXTERIOR ELEVATION 4

#18036-AA VISION WINDOW

SCALE: 3/8" = 1'-0"

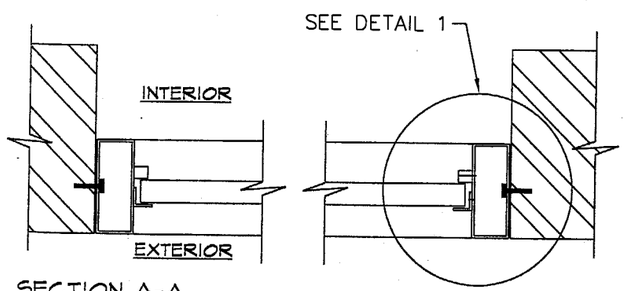

SECTION A-A
SCALE: 3/4" = 1'-0"

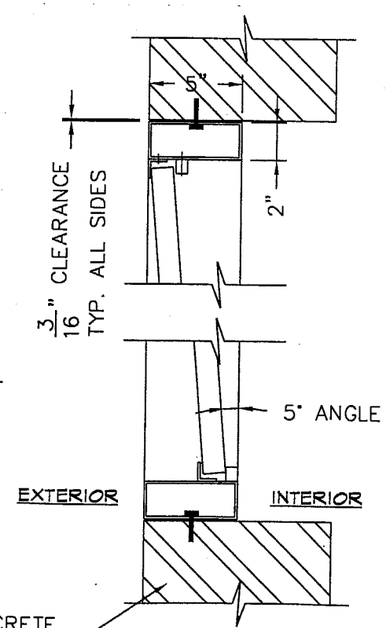

SECTION B-B
SCALE: 3/4" = 1'-0"

PART SCHEDULE

ITEM	DESCRIPTION
1	GLASS LITE
2	ALUMINUM WINDOW FRAME (HOR)
3	ALUMINUM WINDOW FRAME (VER)
4	INTERIOR GLASS STOP (HOR)
5	INTERIOR GLASS STOP (VER)
6	INTERIOR GLASS STOP SCREWS
7	EXTERIOR GLASS STOP (HOR)
8	EXTERIOR GLASS STOP (VER)
9	EXTERIOR GLASS STOP RIVETS
10	DIVIDING TRIM (VER)*NON STRUCTURAL
11	RIBBON SEALANT
12	INSTALLATION FASTENERS
13	CLEAR SILICONE SEALANT

* SEE BILL OF MATERIALS FOR ADDITIONAL DETAILS

WIND DESIGN CRITERIA:

PER SECTION 2309 OF THE SOUTH FLORIDA BUILDING CODE SHALL BE IN ACCORDANCE WITH ASCE 7-88 "MINIMUM DESIGN LOADS FOR BUILDINGS AND OTHER STRUCTURES"

WIND VELOCITY = 120 M.P.H.
EXPOSURE D
BUILDING CATEGORY = 1
IMPORTANCE FACTOR 1 = 1.05
FOR BUILDING WITH MEAN ROOF HEIGHT = 20 FEET OR LESS
4 DESIGN PRESSURE RATING (POSITIVE) +40.0
DESIGN PRESSURE RATING (NEGATIVE) -60.0

4 NOTES

1.) 1" DIA. ACCESS HOLE TO FASTEN TAPCONS TO STRUCTURE. OFFSET HOLES FROM INTERIOR & EXTERIOR GLASS STOP FASTENERS. TAPCONS MUST BE EMBEDDED A MINIMUM OF 1 1/4" INTO STRUCTURE.
2.) EACH CHANNEL IS ATTACHED TO THE FRAME USING #10-12 BY 1-1/2" STAINLESS STEEL, PFH SMS SPACED 3" AWAY FROM THE ENDS AND APPROX. 15" ON CENTER. BUTT JOINTS ON CENTER PANEL USES A 3/8" BY 1-3/16" BEAD OF SILICONE SEALANT ON BOTH ENDS OF CENTER PANEL.
3.) SHUTTERS ARE NOT REQUIRED.

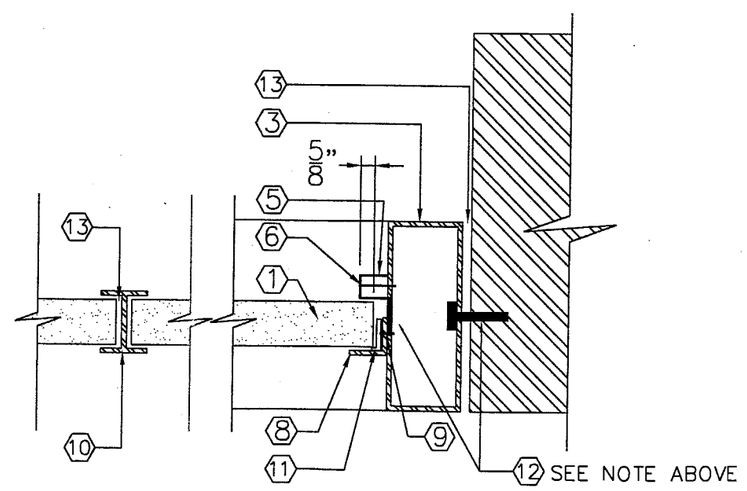

1 DETAIL
SCALE: N.T.S.

FOR DADE COUNTY USE ONLY

APPROVED AS COMPLYING WITH THE SOUTH FLORIDA BUILDING CODE
DATE October 12, 2000
BY Manuel Diaz
PRODUCT CONTROL DIVISION
BUILDING CODE COMPLIANCE OFFICE
ACCEPTANCE NO. 00-0605.04

Rev.#	Date:	By:
#1	01-09-97	WmK
#2	02-28-97	WmK
#3	05-21-97	NJM
#4	09-21-00	KC

FORELINE SECURITY
Tomorrow's Protection... Today
8419 SUNSTATE STREET
TAMPA, FLORIDA 33634
(813) 885-6615

SEAL:

JERRY M. AUSTIN
FL. PE. #0016371
STRUCTURAL ENGINEER

For: FORELINE SECURITY
PRODUCTION DRAWINGS
Title: #18036-AA DRIVE-UP VISION WINDOW

Date: 5-30-97
Scale: AS NOTED
Dwg. By: WmK
Dwg.#: DW-00350

Sheet:
1 of 2 4

BILL OF MATERIALS

ITEM	DESCRIPTION	PART NO.	QTY.	MATERIAL	DIMENSIONS	MFGR.	GRADE
1	GLASS LITE	3660	3	SEE NOTE #1	36"H X 60"W X 1 3/16" THK.	GUARDIAN INDUSTRIES	U.L. CLASS I
2	ALUMINUM WINDOW FRAME (HOR)	8113	2	6063-T5 ALUMINUM EXTRUSION-TUBING	5"W X 2"D X 1/8" THK. X 185.5"L	WESTSHORE GLASS	
3	ALUMINUM WINDOW FRAME (VER)	8113	2	6063-T5 ALUMINUM EXTRUSION-TUBING	5"W X 2"D X 1/8" THK. X 30.75"L	WESTSHORE GLASS	
4	INTERIOR GLASS STOP (HOR)	10017	4	6063-T5 ALUMINUM EXTRUSION-CHANNEL	3/4"H X 5/8"W X 175.5" THK.	WESTSHORE GLASS	
5	INTERIOR GLASS STOP (VER)	10017	5	6063-T5 ALUMINUM EXTRUSION-CHANNEL	3/4"H X 5/8"W X 30"L	WESTSHORE GLASS	
6	INTERIOR GLASS STOP SCREWS	8-32-1	6	STEEL SCREWS	#8-32 X 1" X 11" O.C.		
7	EXTERIOR GLASS STOP (HOR)	8122	2	6063-T5 ALUMINUM EXTRUSION-ANGLE	1" X 1" X 1/8"THK. X 27 1/2"L	WESTSHORE GLASS	
8	EXTERIOR GLASS STOP (VER)	8122	2	6063-T5 ALUMINUM EXTRUSION-ANGLE	1" X 1" X 1/8"THK. X 27 1/2"L	WESTSHORE GLASS	
9	EXTERIOR GLASS STOP RIVETS	AD54ABS	40	5056 ALUMINUM W/ ALUM. MANDREL	5/32" DIA. X 7/16"L		N/A
10	DIVIDING TRIM (VER)	83172	2	6063-T5 ALUMINUM EXTRUSION-TEE	1 5/8" X 3/4" X 27 1/2"L		
11	RIBBON SEALANT	WEATHERBAN PF-5422	1	SYNTHETIC RUBBER SEALANT	1" W X 1/8" THK. X 37"L	3M	N/A
12	INSTALLATION FASTENERS	TAPCON N'CAOR SCREW	20	STEEL W/ BLUE ZINC COATING	3 1/4"L X 1/4"DIA. @ 24"O.C.	IBCO	N/A
13	CLEAR SILICONE SEALANT		AS REQ	SILICONE	1/4" X 1" BEAD		

NOTES:
1. GLASS LITE IS 1 3/16" BULLET RESISTANT LAMINATED GLASS CONSISTING OF 1/8" (AN) – 0.020 IN. SAFELEX PVB – 3/8" (AN) –0.020 IN. SAFELEX PVB –1/2" (AN) – 0.020 IN. SAFELEX PVB – 1/8" (AN).
2. REVISED TAPCON LENGTH TO 3 1/4", 5-21-97

FOR DADE COUNTY USE ONLY

APPROVED AS COMPLYING WITH THE SOUTH FLORIDA BUILDING CODE
DATE October 12, 2000
BY Manuel Suarez
PRODUCT CONTROL DIVISION
BUILDING CODE COMPLIANCE OFFICE
ACCEPTANCE NO. 00-0605.04

Rev.#	Date:	By:
#1	01-09-97	WmK
#2	02-28-97	WmK
#3	05-21-97	NJM
#4	09-21-00	KC

FORELINE SECURITY
Tomorrow's Protection... Today
8419 SUNSTATE STREET
TAMPA, FLORIDA 33634
(813) 885-6615

SEAL:

JERRY M. AUSTIN
FL. PE. #0016371
STRUCTURAL ENGINEER

For: FORELINE SECURITY
PRODUCTION DRAWINGS

Title: #18036-AA DRIVE-UP VISION WINDOW BILL OF MATERIALS

Date: 5-30-97
Scale: NONE
Dwg. By: NJM
Dwg.#: DW-00350 4

Sheet:
2 of 2 4