MIAMI-DADE COUNTY, FLORIDA
METRO-DADE FLAGLER BUILDING

BUILDING CODE COMPLIANCE OFFICE
METRO-DADE FLAGLER BUILDING
140 WEST FLAGLER STREET, SUITE 1603
MIAMI, FLORIDA 33130-1563
(305) 375-2901 FAX (305) 375-2908

CONTRACTOR LICENSING SECTION
(305) 375-2527 FAX (305) 375-2558

CONTRACTOR ENFORCEMENT SECTION
(305) 375-2966 FAX (305) 375-2908

PRODUCT CONTROL DIVISION
(305) 375-2902 FAX (305) 372-6339

PRODUCT CONTROL NOTICE OF ACCEPTANCE

Metal Shield Corporation
2139 University Dr., Ste #302
Coral Springs FL 33071

Your application for Product Approval of:
HT100 Aluminum Accordion Shutter
under Chapter 8 of the Code of Miami-Dade County governing the use of Alternate Materials and Types of Construction, and completely described herein, has been recommended for acceptance by the Miami-Dade County Building Code Compliance Office (BCCO) under the conditions specified herein.

This approval shall not be valid after the expiration date stated below. BCCO reserves the right to secure this product or material at anytime from a jobsite or manufacturer's plant for quality control testing.
If this product or material fails to perform in the approved manner, BCCO may revoke, modify, or suspend the use of such product or material immediately. BCCO reserves the right to revoke this approval, if it is determined BCCO that this product or material fails to meet the requirements of the South Florida Building Code.

The expense of such testing will be incurred by the manufacturer.

Acceptance No.: 00-0605.12

Expires: 06/27/2003

Raul Rodriguez
Chief Product Control Division

THIS IS THE COVERSHEET, SEE ADDITIONAL PAGES FOR SPECIFIC AND GENERAL CONDITIONS

BUILDING CODE & PRODUCT REVIEW COMMITTEE

This application for Product Approval has been reviewed by the BCCO and approved by the Building Code and Product Review Committee to be used in Dade County, Florida under the conditions set forth above.

Francisco J. Quintana, R.A.
Director
Miami-Dade County
Building Code Compliance Office

Approved: 06/22/2000

Internet mail address: postmaster@buildingcodeonline.com **Homepage: http://www.buildingcodeonline.com**

Metal Shield Corporation

ACCEPTANCE No. : **00-0605.12**

APPROVED : JUN 2 2 2000

EXPIRES : **June 27, 2003**

NOTICE OF ACCEPTANCE: SPECIFIC CONDITIONS

1. SCOPE

This renews the Notice of Acceptance, No. 98-0605.04, which was issued on June 29, 1998. It approves an aluminum accordion type shutter, as described in Section 2 of this Notice of Acceptance, designed to comply with the South Florida Building Code, 1994 Edition for Miami-Dade County, for the locations where the pressure requirements, as determined by SFBC Chapter 23, do not exceed the Design Pressure Rating values indicated in the approved drawings.

2. PRODUCT DESCRIPTION

This aluminum accordion type shutter and its components shall be constructed in strict compliance with the following documents: Drawing No. 98-838, titled "HT100 Accordion Shutter", prepared by Knezevich & Associates, Inc., dated July 23, 1996, revision #5 dated April 30, 1998, sheets 1 through 6 of 6, bearing the Miami-Dade County Product Control Approval and Renewal stamps with the Notice of Acceptance numbers and approval dates by the Miami-Dade County Product Control Division. These documents shall hereinafter be referred to as the approved drawings.

3. LIMITATIONS

All permanent set components, included but not limited to embedded anchor bolts, threaded cones, metal shields, headers and sills, must be protected against corrosion, contamination and damage at all times.

4. INSTALLATION

This aluminum accordion type shutter and its components shall be installed in strict compliance with the approved drawings.

5. LABELING

Each unit shall bear a permanent label with the manufacturer's name or logo, city, state and the following statement: "Miami-Dade County Product Control Approved".

6. BUILDING PERMIT REQUIREMENTS

6.1 Application for building permit shall be accompanied by copies of the following:

- **6.1.1** This Notice of Acceptance.
- **6.1.2** Duplicate copies of the approved drawings, as identified in Section 2 of this Notice of Acceptance, clearly marked to show the components selected for the proposed installation.
- **6.1.3** Any other documents required by the Building Official or the South Florida Building Code (SFBC) in order to properly evaluate the installation of this system.

Helmy A. Makar

Helmy A. Makar, P.E.- Product Control Examiner
Product Control Division

Metal Shield Corporation

ACCEPTANCE No. : 00-0605.12

APPROVED : JUN 2 2 2000

EXPIRES : June 27, 2003

NOTICE OF ACCEPTANCE: STANDARD CONDITIONS

1 Renewal of this Acceptance (approval) shall be considered after a renewal application has been filed and the original submitted documents, including test-supporting data, engineering documents, are no older than eight (8) years.

2. Any and all approved products shall be permanently labeled with the manufacturer's name, city, state, and the following statement: "Miami-Dade County Product Control Approved", or as specifically stated in the specific conditions of this Acceptance.

3. Renewals of Acceptance will not be considered if:
   a. There has been a change in the South Florida Building Code affecting the evaluation of this product and the product is not in compliance with the code changes.
   b. The product is no longer the same product (identical) as the one originally approved.
   c. If the Acceptance holder has not complied with all the requirements of this acceptance, including the correct installation of the product.
   d. The engineer, who originally prepared, signed and sealed the required documentation initially submitted, is no longer practicing the engineering profession.

4. Any revision or change in the materials, use, and/or manufacture of the product or process shall automatically be cause for termination of this Acceptance, unless prior written approval has been requested (through the filing of a revision application with appropriate fee) and granted by this office.

5. Any of the following shall also be grounds for removal of this Acceptance:
   a. Unsatisfactory performance of this product or process.
   b. Misuse of this Acceptance as an endorsement of any product, for sales, advertising or any other purposes.

6. The Notice of Acceptance number preceded by the words Miami-Dade County, Florida, and followed by the expiration date may be displayed in advertising literature. If any portion of the Notice of Acceptance is displayed, then it shall be done in its entirety.

7. A copy of this Acceptance as well as approved drawings and other documents, where it applies, shall be provided to the user by the manufacturer or its distributors and shall be available for inspection at the job site at all time. The engineer needs not reseal the copies.

8. Failure to comply with any section of this Acceptance shall be cause for termination and removal of Acceptance.

9. This Notice of Acceptance consists of pages 1, 2 and this last page 3.

END OF THIS ACCEPTANCE

Helmy A. Makar, P.E.- Product Control Examiner
Product Control Division

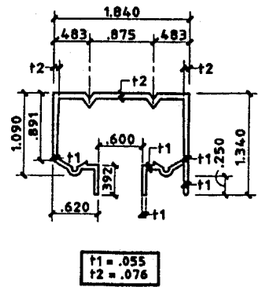

1 HEADER-CLG. MOUNTED
SCALE: HALF SIZE

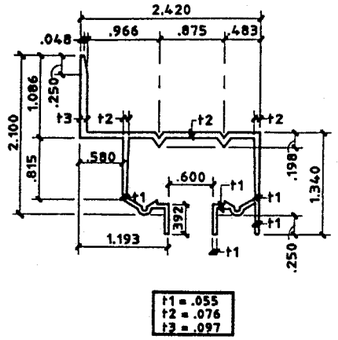

2 HEADER WALL MOUNTED
SCALE: HALF SIZE

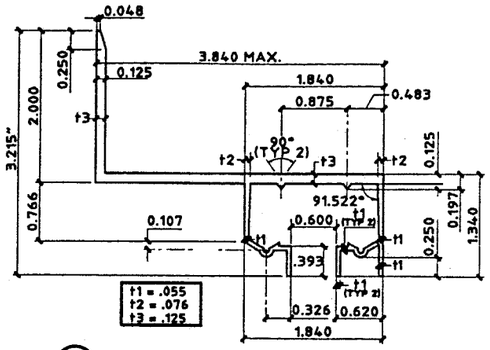

2a BUILD-OUT WALL HEADER
SCALE: HALF SIZE

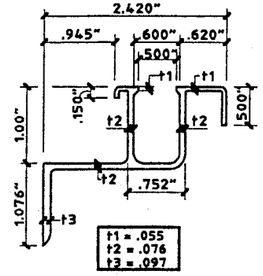

3 SILL-WALL MOUNTED
SCALE: HALF SIZE

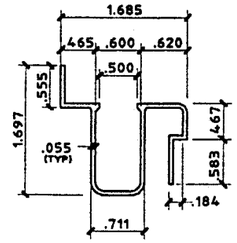

4 ADJ. SILL-TOP
SCALE: HALF SIZE

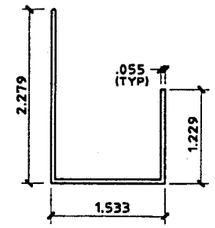

5 ADJ. SILL-BOT.
SCALE: HALF SIZE

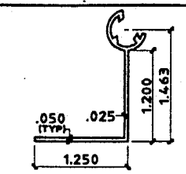

6a 90° END SLAT
SCALE: HALF SIZE

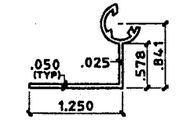

6 90° END SLAT
SCALE: HALF SIZE

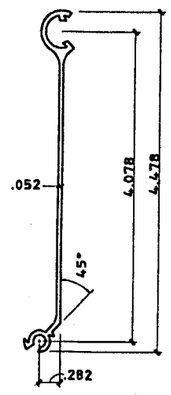

TYPE 1

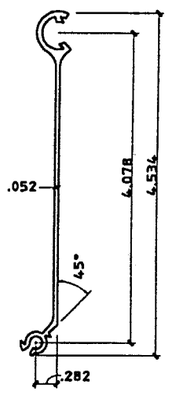

TYPE 2

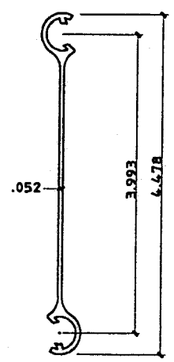

EITHER TYPE 1 OR TYPE 2 SLAT IS ACCEPTABLE.
THESE SLATS ARE INTERCHANGEABLE

8 TYP. SLATS
SCALE: HALF SIZE

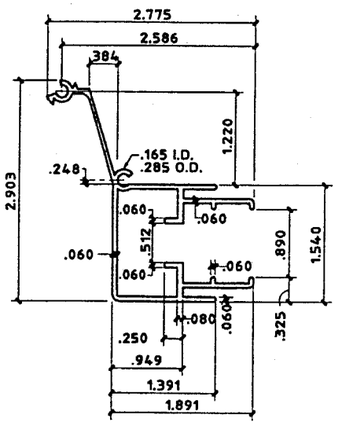

8a ADAPTER SLAT
SCALE: HALF SIZE

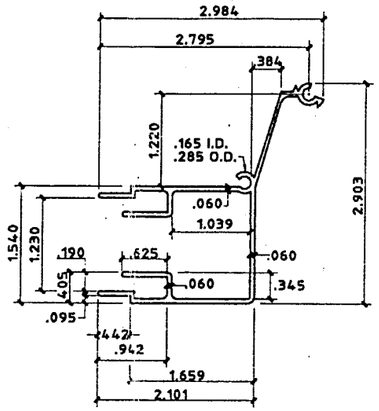

9 CENTER MATE 1
SCALE: HALF SIZE

10 CENTER MATE 2
SCALE: HALF SIZE

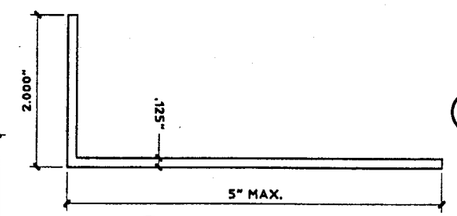

11 ANGLE
SCALE: HALF SIZE

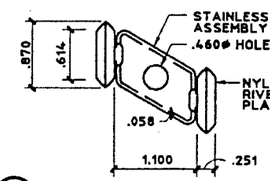

12 ROLLER ASSEMBLY
SCALE: HALF SIZE

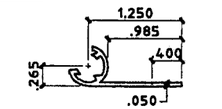

7 FLAT END SLAT
SCALE: HALF SIZE

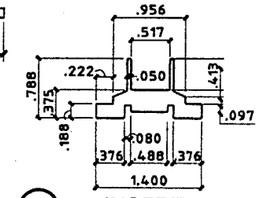

13 INSERT
SCALE: HALF SIZE

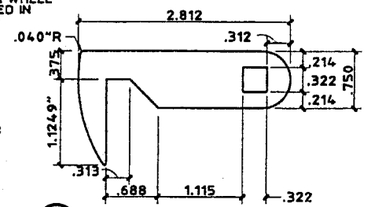

14 LOCKING ARM
SCALE: HALF SIZE
1/8" THICK STAINLESS STEEL

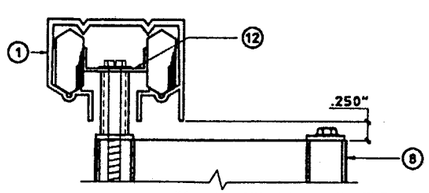

#10 x 2" SMS. MANUFACTURED FROM #410HT OR 18-8 STAINLESS STEEL W/ XYLAN 5200 FLUOROCARBON COATING & .460"ø x .050" THICK 300 SERIES STAINLESS STEEL WASHER (TYP. TOP & BOTTOM)

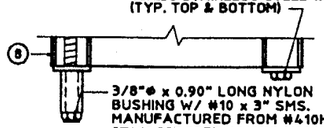

3/8"ø x 0.90" LONG NYLON BUSHING W/ #10 x 3" SMS. MANUFACTURED FROM #410HT STAINLESS STEEL W/ XYLAN 5200 FLUOROCARBON COATING & .460"ø x .050" THICK 300 SERIES STAINLESS STEEL WASHER (TYP. TOP & BOTTOM)

15 SCREW BUSHING & ROLLER/ BUSHING ASSEMBLY
SCALE: HALF SIZE

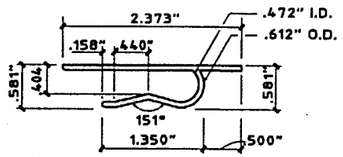

16 LOCKING CLIP
SCALE: HALF SIZE

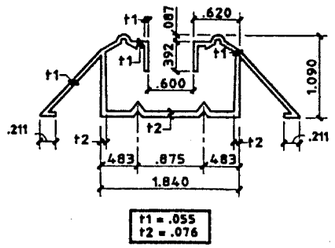

17 WALKOVER SILL FLOOR MOUNTED
SCALE: HALF SIZE

NOTES:

1. THIS ACCORDION SHUTTER SYSTEM IS DESIGNED IN ACCORDANCE WITH THE SOUTH FLORIDA BUILDING CODE, 1994 EDITION.
2. POSITIVE AND NEGATIVE DESIGN PRESSURE CALCULATIONS SHALL BE PERFORMED FOR SPECIFIC JOBS IN ACCORDANCE WITH ASCE 7-88 "MINIMUM DESIGN LOADS FOR BUILDINGS AND OTHER STRUCTURES". TABLES SHALL BE REFERENCED AT APPROPRIATE DESIGN LOADS.
3. ALUMINUM EXTRUSIONS SHALL BE 6063-T6 ALUMINUM ALLOY, U.O.N.
4. EACH SHUTTER ASSEMBLY SHALL BE PERMANENTLY LABELED AT THE BOTTOM END OF THE LOCKING CENTERMATE AS FOLLOWS:

   METAL SHIELD CORPORATION
   CORAL SPRINGS, FLORIDA
   DADE COUNTY PRODUCT CONTROL APPROVED

5. ALL BOLTS AND WASHERS SHALL BE 2024-T4 ALUMINUM ALLOY, STAINLESS STEEL, OR GALVANIZED STEEL WITH A MIN. Fy = 33 KSI. POP RIVETS SHALL BE 3/16"ø 5052 ALUM. ALLOY
6. ALL SHUTTERS SHALL HAVE A LOCKING MECHANISM AT CENTER OR SIDE CLOSURE WITHIN 18" OF CENTER (VERTICALLY). LOCKING MECHANISM SHALL BE LOCKED TO PROVIDE HURRICANE PROTECTION.
7. THE DETAILS AND SPECIFICATIONS SHOWN HEREIN REPRESENT THE PRODUCTS TESTED FOR IMPACT, CYCLIC AND UNIFORM STATIC AIR PRESSURE IN CONFORMANCE W/ MIAMI-DADE COUNTY PROTOCOLS PA 201, 202, AND 203.
8. DESIGN IS BASED ON CONSTRUCTION TESTING CORPORATION (CTC) TEST REPORT No. 96-024 AND 96-037.
9. TOP DETAILS MAY ALSO BE USED AS SILLS.
10. FLOOR TRACKS MAY BE REMOVABLE AT NON-STACKING LOCATIONS. USE REMOVABLE ANCHORS SUCH AS CALK-IN ANCHORS.
11. THE PERMIT HOLDER SHALL VERIFY THE ADEQUACY OF THE EXISTING STRUCTURE TO SUSTAIN THE NEW SUPERIMPOSED LOADS AND TO VERIFY ALL DIMENSIONS AT THE JOB SITE BEFORE COMMENCING WITH THE WORK.
12. ANCHORS SHALL BE INSTALLED IN ACCORDANCE WITH MANUFACTURER'S RECOMMENDATIONS. EMBEDMENT LENGTHS SHALL BE AS NOTED AND DO NOT INCLUDE STUCCO OR OTHER FINISHES.

PRODUCT RENEWED
ACCEPTANCE No. 00-0605.12
EXPIRATION DATE June 27, 2003
By Helmy A. Mohr
PRODUCT CONTROL DIVISION
BUILDING CODE COMPLIANCE OFFICE

APPROVED AS COMPLYING WITH THE SOUTH FLORIDA BUILDING CODE
DATE JUNE 29 1998
BY Helmy A. Mohr
PRODUCT CONTROL DIVISION
BUILDING CODE COMPLIANCE OFFICE
ACCEPTANCE NO. 98-0605.04

KNEZEVICH & ASSOCIATES, INC.
CONSULTING ENGINEERS • PRODUCT TESTING
641 MOKENA DRIVE-MIAMI SPRINGS, FLORIDA 33166
MIAMI (305) 883-9571 FT. LAUDERDALE (954) 677-9500
FAX: (305) 883-9572

COPYRIGHT 1998 KNEZEVICH & ASSOCIATES, INC.
HT100 LICENSED BY HI-TECH SHUTTER GROUP, INC.

HT100 ACCORDION SHUTTER

METAL SHIELD CORPORATION
2139 UNIVERSITY DRIVE, SUITE 302
CORAL SPRINGS, FL 33071
DADE: (305) 625-3511 BROWARD (954) 341-1616

revisions

no.	date	by	description
2	10/10/96		CLARIFY DETAILS
3	11/26/97	JWK	REVISE FASTENERS
4	01/14/98	JWK	FASTENER NOTES
5	04/20/98	JWK	SLAT 2/REV2.4 DESC.

HTSG I.D. #050298961680

V.J. KNEZEVICH
PROFESSIONAL ENGINEER
FL License No: PE 0010983

MAY 12 1998

date 07/23/96	
scale AS NOTED	drawn by MC
design by VJK	checked by VJK
drawing no. 98-838	
sheet 1 of 6	

05/02/98 09:08

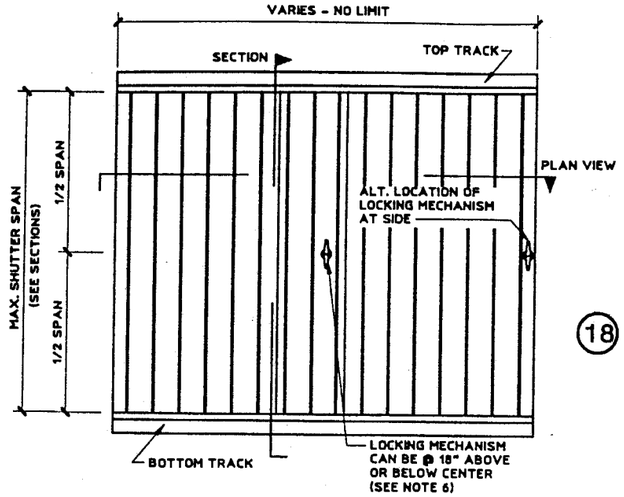

TYPICAL ELEVATION

N.T.S.

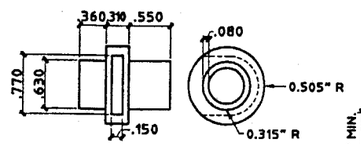

(18) LOCKING ARM ALIGNMENT BUSHING (NYLON)

SCALE: HALF SIZE

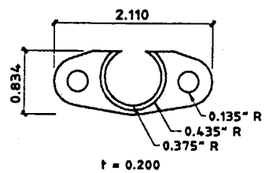

(19) INSIDE "T" HANDLE SHIM (NYLON)

SCALE: HALF SIZE

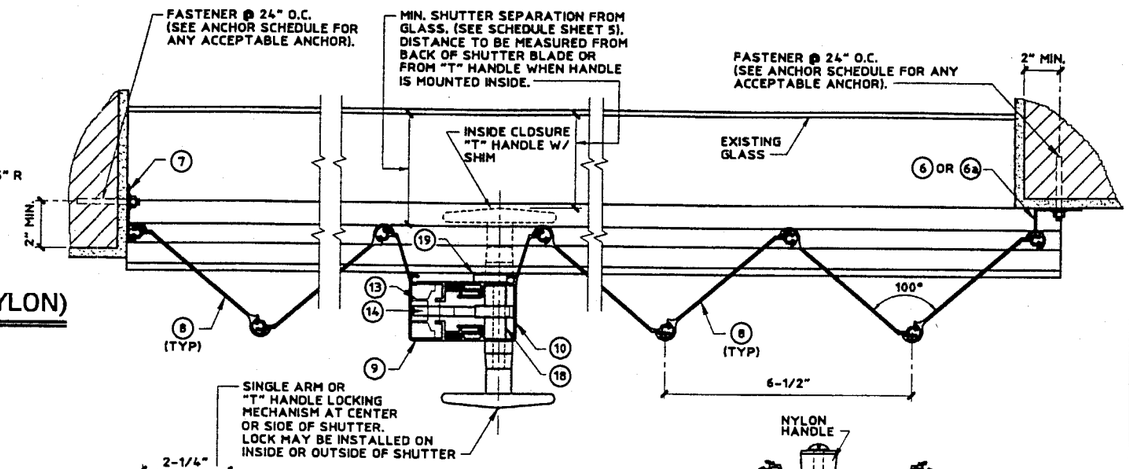

TYPICAL PLAN VIEW

SCALE: 3" = 1'-0"

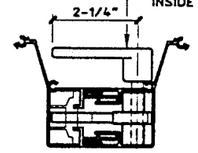

SINGLE ARM LOCK

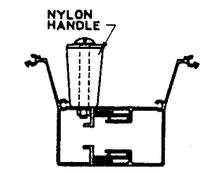

(DOES NOT REPLACE "T" HANDLE OR SINGLE ARM LOCK)

OPTIONAL CLOSER HANDLE

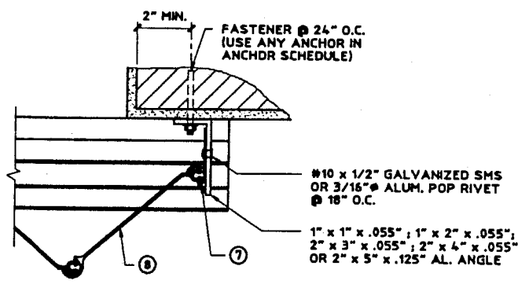

(A) ALT. CLOSURE DETAIL

SCALE: 3" = 1'-0"

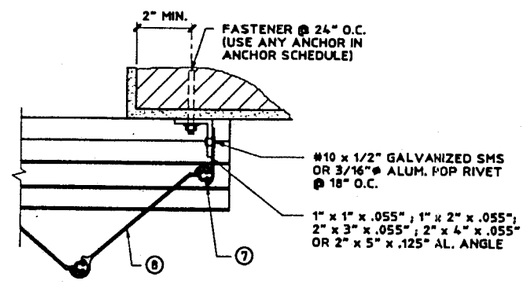

(B) ALT. CLOSURE DETAIL

SCALE: 3" = 1'-0"

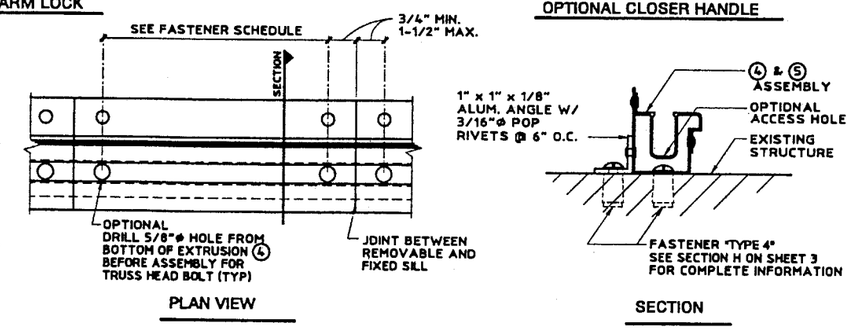

(C) REMOVABLE FLOOR TRACK DETAIL

SCALE : 3"= 1'- 0"

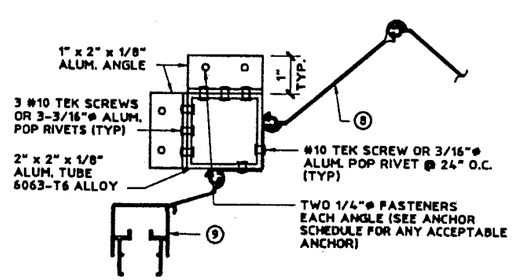

NOTE:
EITHER CONDITION MAY BE TYPICAL FOR EITHER SIDE

(D) CORNER CLOSURE DETAIL

SCALE: 3" = 1'-0"

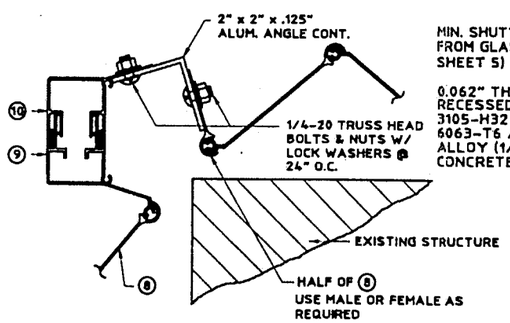

(E) ALT. CORNER CLOSURE DETAIL

SCALE: 3" = 1'-0"

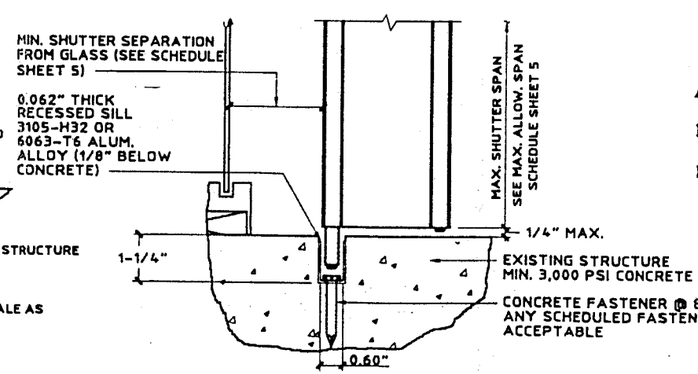

(F) ALTERNATE FLOOR MOUNT DETAIL

SCALE : 3"= 1'- 0"

PRODUCT RENEWED

ACCEPTANCE No. 00-0605.12

EXPIRATION DATE June 27, 2003

By Helmy A. Mekhail

PRODUCT CONTROL DIVISION
BUILDING CODE COMPLIANCE OFFICE

APPROVED AS COMPLYING WITH THE SOUTH FLORIDA BUILDING CODE

DATE JUNE 29 1998

BY Helmy A. Mekhail

PRODUCT CONTROL DIVISION
BUILDING CODE COMPLIANCE OFFICE

ACCEPTANCE NO. 98-0605.04

05/02/98 09:09

KNEZEVICH & ASSOCIATES, INC.
CONSULTING ENGINEERS • PRODUCT TESTING
641 MOKENA DRIVE-MIAMI SPRINGS, FLORIDA 33166
MIAMI (305) 883-9571 FT. LAUDERDALE (954) 677-9500
FAX: (305) 883-9572

COPYRIGHT 1998 KNEZEVICH & ASSOCIATES, INC.
HT100 LICENSED BY HI-TECH SHUTTER GROUP, INC.

HT100 ACCORDION SHUTTER

METAL SHIELD CORPORATION
2139 UNIVERSITY DRIVE, SUITE 302
CORAL SPRINGS, FL 33071
DADE: (305) 625-3511 BROWARD (954) 341-1616

revisions

no.	date	by	description
2	10/10/96		CLARIFY DETAILS
3	11/26/97	JWK	REVISE FASTENERS
4	01/14/98	JWK	FASTENER NOTES
5	04/30/98	JWK	SLAT 2/REV2,4 DESC.

HTSG I.D. #0502988618BD

V.J. KNEZEVICH
PROFESSIONAL ENGINEER
FL License No: PE 0010983

MAY 12 1998

date 07/23/96	
scale AS NOTED	drawn by MC
design by VJK	checked by VJK
drawing no. 98-838	
sheet 2 of 6	

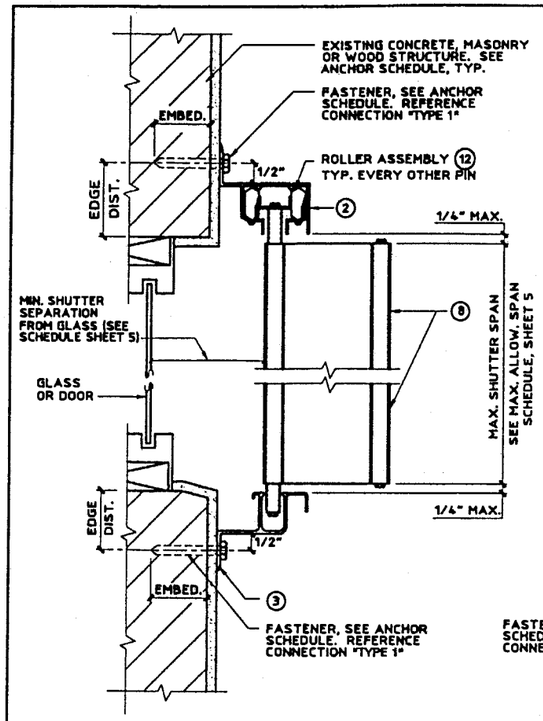

(G) WALL MOUNT SECTION

SCALE : 3"= 1'- 0"

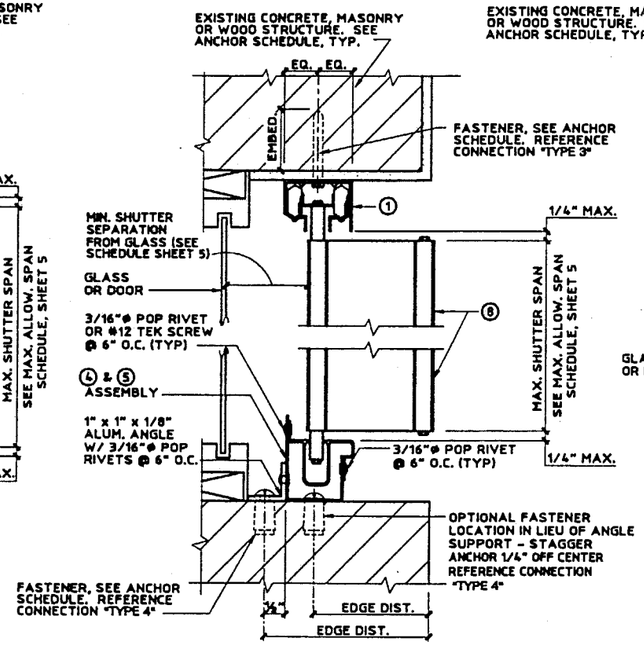

(H) CEILING/INSIDE MOUNT SECTION

SCALE : 3"= 1'- 0"

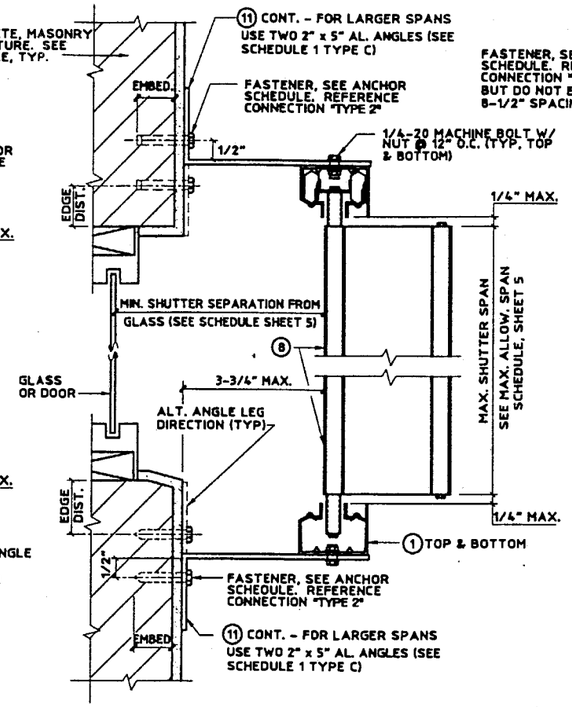

(I) BUILD-OUT MOUNT SECTION

SCALE : 3"= 1'- 0"

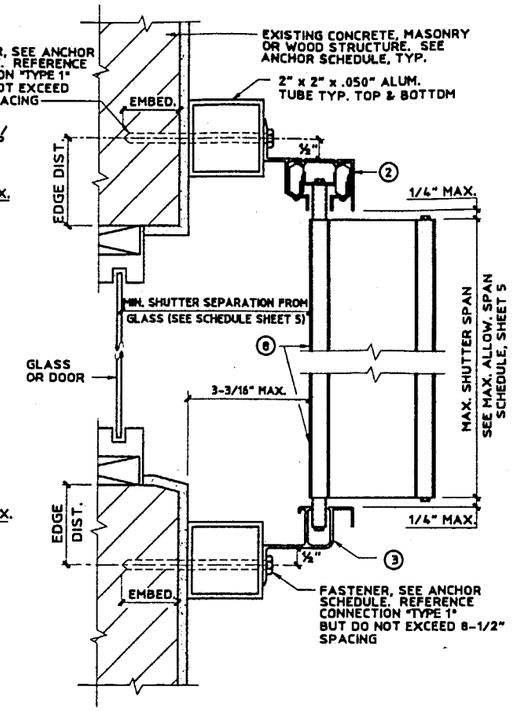

(J) BUILD-OUT MOUNT SECTION

SCALE : 3" = 1'-0"

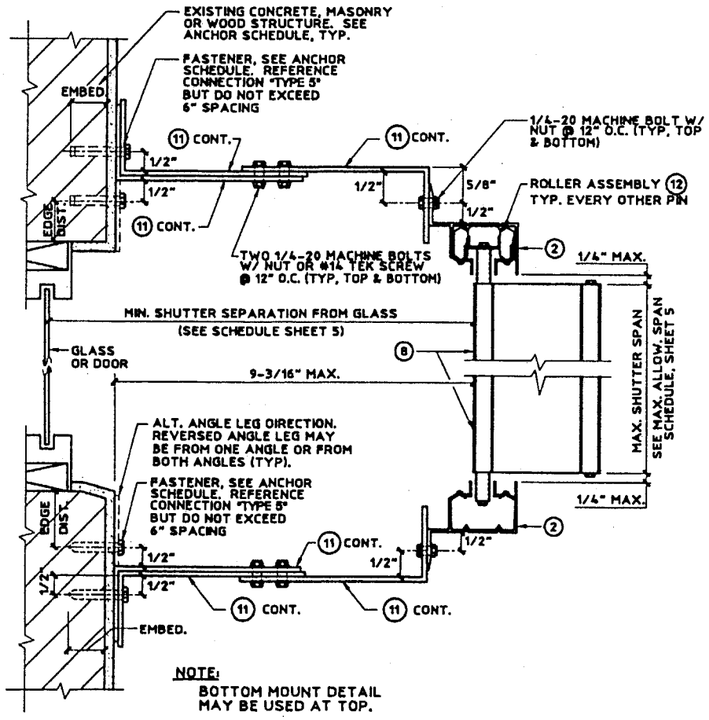

(K) BUILD-OUT MOUNT SECTION

SCALE : 3"= 1'- 0"

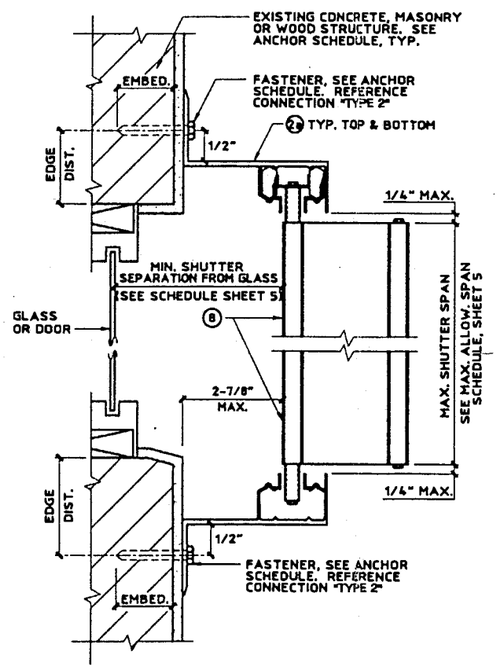

(L) BUILD-OUT MOUNT SECTION

SCALE : 3"= 1'- 0"

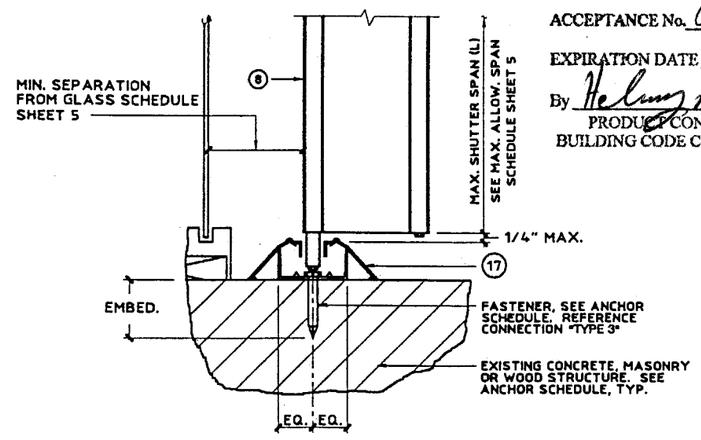

(M) FLOOR MOUNT SECTION

SCALE : 3"= 1'- 0"

PRODUCT RENEWED

ACCEPTANCE No. 00-0605.12

EXPIRATION DATE June 27, 2003

By [signature]

PRODUCT CONTROL DIVISION
BUILDING CODE COMPLIANCE OFFICE

APPROVED AS COMPLYING WITH THE SOUTH FLORIDA BUILDING CODE

DATE JUNE 29 1998

BY [signature]

PRODUCT CONTROL DIVISION

BUILDING CODE COMPLIANCE OFFICE

ACCEPTANCE NO. 98-0605.04

KNEZEVICH & ASSOCIATES, INC.
CONSULTING ENGINEERS • PRODUCT TESTING
641 MOKENA DRIVE·MIAMI SPRINGS, FLORIDA 33166
MIAMI (305) 883-9571 FT. LAUDERDALE (954) 677-9500
FAX: (305) 883-9572

COPYRIGHT 1998 KNEZEVICH & ASSOCIATES, INC.
HT100 LICENSED BY HI-TECH SHUTTER GROUP, INC.

HT100 ACCORDION SHUTTER

METAL SHIELD CORPORATION
2139 UNIVERSITY DRIVE, SUITE 302
CORAL SPRINGS, FL 33071
DADE: (305) 625-3511 BROWARD (954) 341-1616

revisions

no.	date	by	description
2	10/10/96		CLARIFY DETAILS
3	11/26/97	JWK	REVISE FASTENERS
4	01/14/98	JWK	FASTENER NOTES
5	04/20/98	JWK	SLAT 2/REV2,4 DESC.

HTSG I.D. #050298861680

V.J. KNEZEVICH
PROFESSIONAL ENGINEER
FL License No. PE 0010983

MAY 12 1998

date	07/23/96
scale AS NOTED	drawn by MC
design by VJK	checked by VJK
drawing no. 98-838	
sheet 3 of 6	

05/02/98 09:10

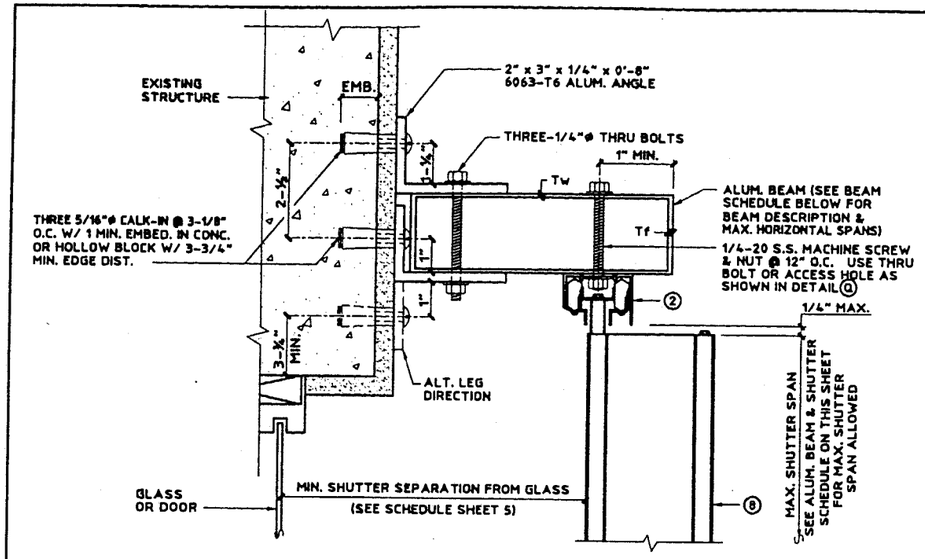

(MAX DESIGN LOAD ± 72 PSF)

N TOP SUPPORT BEAM DETAIL

SCALE : 3"= 1'- 0"

ALUM. BEAM & SHUTTER SCHEDULE		
DESCRIPTION	SHUTTER SPAN	BEAM SPAN
2" x 5" Tw = .125" Tf = .125"	5'-0"	9'-5"
	8'-0"	8'-1"
	10'-0"	7'-6"
2" x 8" Tw = .072" Tf = .224"	5'-0"	14'-0"
	8'-0"	12'-0"
	10'-0"	11'-1"
2" x 9" Tw = .072" Tf = .224"	5'-0"	15'-5"
	8'-0"	13'-2"
	10'-0"	12'-3"

NOTE: 1. USE BEAM SCHEDULE FOR DETAILS N AND Q.
2. SHUTTER SPAN TO BE LIMITED TO THOSE SHOWN IN TABLE, SHEET 5.
3. BEAM SPAN SHALL BE CONSIDERED AS THE DISTANCE FROM ℄ OF SUPPORT TO ℄ OF SUPPORT.

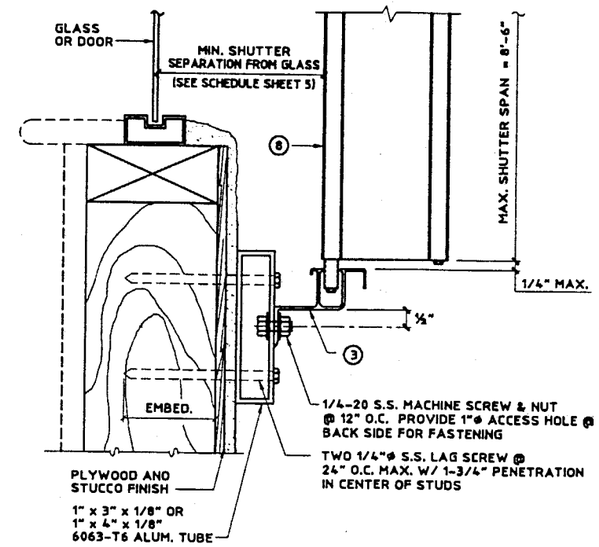

(MAX. DESIGN LOAD = ± 72 P.S.F.)

P WALL MOUNT SECTION - USING ALUM. TUBE

SCALE : 3"= 1'- 0"

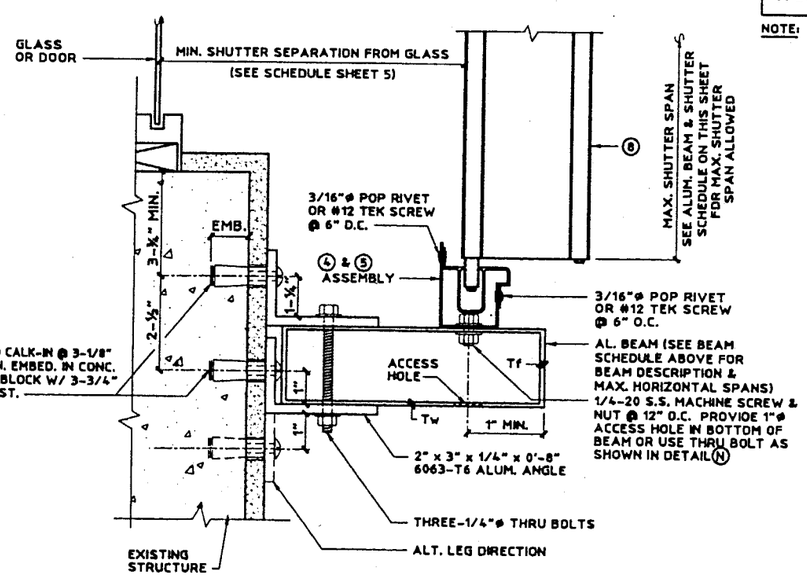

(MAX DESIGN LOAD ± 72 PSF)

Q BOTTOM SUPPORT BEAM DETAIL

SCALE : 3"= 1'- 0"

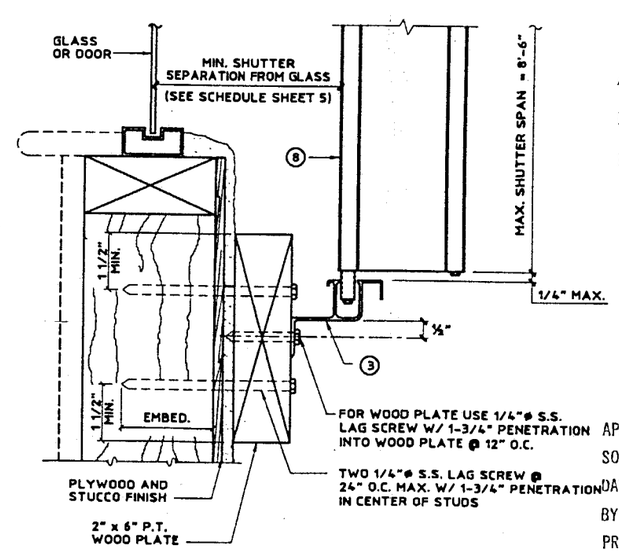

(MAX. DESIGN LOAD = ± 72 P.S.F.)

R WALL MOUNT SECTION - USING 2" x 6" WOOD PLATE

SCALE : 3"= 1'- 0"

PRODUCT RENEWED

ACCEPTANCE No. 00-0605.12

EXPIRATION DATE June 27, 2003

By [signature]

PRODUCT CONTROL DIVISION
BUILDING CODE COMPLIANCE OFFICE

APPROVED AS COMPLYING WITH THE SOUTH FLORIDA BUILDING CODE

DATE JUNE 29 1998

BY [signature]

PRODUCT CONTROL DIVISION
BUILDING CODE COMPLIANCE OFFICE
ACCEPTANCE NO. 98-0605.04

KNEZEVICH & ASSOCIATES, INC.
CONSULTING ENGINEERS • PRODUCT TESTING
641 MOKENA DRIVE•MIAMI SPRINGS, FLORIDA 33166
MIAMI (305) 883-9571 FT. LAUDERDALE (954) 677-9500
FAX: (305) 883-9572

COPYRIGHT 1998 KNEZEVICH & ASSOCIATES, INC.
HT100 LICENSED BY HI-TECH SHUTTER GROUP, INC.

HT100 ACCORDION SHUTTER

METAL SHIELD CORPORATION
2139 UNIVERSITY DRIVE, SUITE 302
CORAL SPRINGS, FL 33071
DADE: (305) 625-3511 BROWARD (954) 341-1616

revisions

no.	date	by	description
2	10/10/96		CLARIFY DETAILS
3	11/26/97	JWK	REVISE FASTENERS
4	01/14/98	JWK	FASTENER NOTES
5	04/30/98	JWK	SLAT 2/REV2,4 DESC.

HTSG I.D. #0502989618BD

V.J. KNEZEVICH
PROFESSIONAL ENGINEER
FL License No: PE 0010983

MAY 12 1998

date 07/23/96	
scale AS NOTED	drawn by HC
design by VJK	checked by VJK

drawing no. 98-838

sheet 4 of 6

05/02/98 09:10

TABLE 1

MAXIMUM ALLOWABLE SPAN SCHEDULE

NEG. DESIGN LOAD (PSF)	TYPE A ALL MOUNTING CONDTIONS EXCEPT Ⓘ Ⓚ Ⓛ (FT - IN)	TYPE B DETAIL Ⓛ OR DETAIL Ⓘ W/ SINGLE ANGLE REQUIRED 3-3/4" MAX. B.O. (FT - IN)	TYPE C DETAIL Ⓘ DOUBLE ANGLE REQUIRED 3-3/4" MAX. B.O. (FT - IN)	TYPE D DETAIL Ⓚ 9-3/16" MAX. B.O. (FT - IN)
30.0	13 - 1	12 - 4	13 - 1	12 - 7
38.0	13 - 1	11 - 0	13 - 1	11 - 2
40.0	12 - 11	10 - 8	12 - 5	10 - 11
48.0	12 - 4	9 - 9	10 - 4	10 - 0
52.0	12 - 1	9 - 4	9 - 7	9 - 7
56.0	11 - 11	9 - 0	9 - 0	9 - 3
61.5	11 - 7	8 - 7	8 - 7	8 - 10
63.3	11 - 6	8 - 6	8 - 6	8 - 8
66.8	10 - 11	8 - 3	8 - 3	8 - 5
67.5	10 - 9	8 - 3	8 - 3	8 - 5
71.2	10 - 3	8 - 0	8 - 0	8 - 2
75.0	9 - 8	7 - 8	7 - 8	8 - 0
81.4	8 - 11	7 - 0	7 - 0	7 - 4
86.8	8 - 5	6 - 7	6 - 7	6 - 10
91.4	8 - 0	6 - 3	6 - 3	6 - 6
100.0	7 - 3	5 - 9	5 - 9	6 - 0
110.0	6 - 7	5 - 2	5 - 2	5 - 5
120.0	6 - 1	4 - 9	4 - 9	5 - 0
130.0	5 - 7	4 - 5	4 - 5	4 - 7
140.0	5 - 2	4 - 1	4 - 1	4 - 3
150.0	4 - 10	3 - 10	3 - 10	4 - 0
160.0	4 - 6	3 - 7	3 - 7	3 - 9
170.0	4 - 3	3 - 4	3 - 4	3 - 6
180.0	4 - 0	3 - 2	3 - 2	3 - 4
190.0	3 - 10	3 - 0	3 - 0	3 - 1
200.0	3 - 7	2 - 10	2 - 10	3 - 0
210.0	3 - 5	2 - 8	2 - 8	2 - 10

NOTES:

1. REFERENCE APPROPRIATE COLUMN IN TABLE 1 BASED ON MOUNTING CONDITION IN FIELD.
2. FOR DESIGN LOADS BETWEEN TABULATED VALUES, USE NEXT HIGHER LOAD OR LINEAR INTERPOLATION MAY BE USED TO DETERMINE ALLOWABLE SPANS.
3. ENTER TABLE 1 WITH NEGATIVE DESIGN LOAD TO DETERMINE MAX. SHUTTER SPAN.
4. ENTER TABLE 2 WITH POSITIVE DESIGN LOAD TO DETERMINE MIN. SHUTTER SEPARATION FROM GLASS.

TABLE 2

MINIMUM SHUTTER SEPARATION FROM GLASS (IN)

POSITIVE DESIGN LOAD (W) (PSF)	ACTUAL SPAN (FT - IN)	MIN. SEPARATION FROM GLASS FOR INSTALLATIONS LESS THAN 30' ABOVE GRADE (INCHES)	MIN. SEPARATION FROM GLASS FOR INSTALLATIONS GREATER THAN 30' ABOVE GRADE (INCHES)
30.0	5 - 0	2-7/8	1-1/2
	7 - 0	2-7/8	1-5/8
	8 - 0	2-7/8	1-5/8
	11 - 0	3	2-1/8
	13 - 1	3-3/4	2-3/4
40.0	5 - 0	2-7/8	1-1/2
	7 - 0	2-7/8	1-5/8
	8 - 0	2-7/8	1-5/8
	11 - 0	3	2-1/4
	12 - 11	3-3/4	3
50.0	5 - 0	2-7/8	1-1/2
	7 - 0	2-7/8	1-5/8
	8 - 0	2-7/8	1-3/4
	11 - 0	3	2-1/2
	12 - 2	3-3/4	3
60.0	5 - 0	2-7/8	1-1/2
	7 - 0	2-7/8	1-5/8
	8 - 0	2-7/8	1-3/4
	11 - 0	3	1-3/4
	11 - 8	3-3/4	3
70.0	5 - 0	2-7/8	1-1/2
	7 - 0	2-7/8	1-5/8
	8 - 0	2-7/8	1-7/8
	9 - 6	3	2-1/4
	10 - 4	3	2-5/8
80.0	5 - 0	2-7/8	1-1/2
	7 - 0	2-7/8	1-3/4
	8 - 0	2-7/8	1-7/8
	11 - 0	3-1/8	3-1/8
	12 - 1	4	4
90.0	5 - 0	2-7/8	1-1/2
	7 - 0	2-7/8	1-3/4
	8 - 0	2-7/8	2
	11 - 0	3-3/8	3-3/8
	11 - 6	3-7/8	4
100.0	5 - 0	2-7/8	1-1/2
	7 - 0	2-7/8	1-3/4
	8 - 0	2-7/8	2
	9 - 0	3	2-3/4
	10 - 3	3	3

PRODUCT RENEWED

ACCEPTANCE No. 00-0605.12

EXPIRATION DATE June 27, 2003

By Helmy A. Mekkawy

PRODUCT CONTROL DIVISION
BUILDING CODE COMPLIANCE OFFICE

APPROVED AS COMPLYING WITH THE SOUTH FLORIDA BUILDING CODE

DATE JUNE 29 1998

BY Helmy A. Mekkawy

PRODUCT CONTROL DIVISION
BUILDING CODE COMPLIANCE OFFICE

ACCEPTANCE NO. 98-0605.04

KNEZEVICH & ASSOCIATES, INC.
CONSULTING ENGINEERS • PRODUCT TESTING
641 MOKENA DRIVE·MIAMI SPRINGS, FLORIDA 33166
MIAMI (305) 883-9571 FT. LAUDERDALE (954) 677-9500
FAX: (305) 883-9572

COPYRIGHT 1998 KNEZEVICH & ASSOCIATES, INC.
HT100 LICENSED BY HI-TECH SHUTTER GROUP, INC.

HT100 ACCORDION SHUTTER

METAL SHIELD CORPORATION
2139 UNIVERSITY DRIVE, SUITE 302
CORAL SPRINGS, FL 33071
DADE: (305) 625-3511 BROWARD (954) 341-1616

revisions

no.	date	by	description
2	10/10/96		CLARIFY DETAILS
3	11/26/97	JWK	REVISE FASTENERS
4	01/14/98	JWK	FASTENER NOTES
5	04/28/98	JWK	SLAT 2/REV2,4 DESC.

HTSG I.D. #0502998168D

V.J. KNEZEVICH
PROFESSIONAL ENGINEER
FL License No: PE 0010983

MAY 12 1998

date 07/23/96
scale AS NOTED
drawn by MC
design by VJK
checked by VJK
drawing no. 98-838
sheet 5 of 6

05/02/98 09:11

ANCHOR SCHEDULE

FASTENER SPACING REQUIRED (INCHES O.C.) FOR VARIOUS DESIGN LOADS

EXISTING STRUCTURE	ANCHOR TYPE	NEG. LOAD (W) P.S.F. MAX. (SEE NOTE 1)	2" EDGE DISTANCE														
			SPANS UP TO 5'-8" (SEE NOTE 1)					SPANS UP TO 8'-0" (SEE NOTE 1)					SPANS UP TO 13'-1" (SEE NOTE 1)				
			CONNECTION TYPE 1	2	3	4	5	1	2	3	4	5	1	2	3	4	5
MIN. 3,000 PSI CONCRETE	1/4"ø ITW TAPCON W/ 1-1/4" MIN. EMBEDMENT	48	12	12	12	7	9	12	12	10	5	7	6	12	6	3	4
		62	12	12	11	5	7	12	12	8	3	5	4	11	5	▨	3
		72	12	12	10	4	6	8	12	7	3	4	4	11	5	▨	3
		92	11	12	7	3	5	4	11	5	▨	3	4	11	5	▨	3
		210	4	11	5	▨	3	4	11	5	▨	3	4	11	5	▨	3
	1/4"ø RAWL CALK-IN W/ 7/8" MIN. EMBEDMENT & 1/4-20 BOLT	48	12	12	12	9	12	12	12	11	6	11	10	12	7	4	7
		62	12	12	12	7	12	12	12	9	5	9	7	12	6	3	6
		72	12	12	11	6	11	12	12	7	4	7	7	12	6	3	6
		92	12	12	8	5	8	7	12	6	3	6	7	12	6	3	6
		210	7	12	6	3	6	7	12	6	3	6	7	12	6	3	6
	1/4"ø RAWL ZAMAC NAILIN W/ 1-1/8" MIN. EMBEDMENT	48	12	12	12	5	8	12	12	9	4	5	5	10	5	▨	3
		62	12	12	10	4	6	12	12	7	3	4	3	9	4	▨	3
		72	12	12	8	3	5	6	11	6	▨	3	3	9	4	▨	3
		92	9	12	6	3	4	3	9	4	▨	3	3	9	4	▨	3
		210	3	9	4	▨	3	3	9	4	▨	3	3	9	4	▨	3
	1/4"ø FEMALE "PANELMATE" W/ 1-1/4" MIN. EMBEDMENT & 1/4-20 MACHINE SCREW	48	12	12	11	5	7	12	12	8	3	5	5	10	4	▨	3
		62	12	12	8	4	6	11	12	6	3	4	3	8	4	▨	▨
		72	12	12	7	3	5	6	11	5	▨	3	3	8	4	▨	▨
		92	9	12	5	▨	4	3	8	4	▨	▨	3	8	4	▨	▨
		210	3	8	4	▨	▨	3	8	4	▨	▨	3	8	4	▨	▨
HOLLOW CONCRETE BLOCK	1/4"ø ITW TAPCON W/ 1-1/4" MIN. EMBEDMENT	48	12	12	9	4	5	11	11	6	▨	3	3	6	3	▨	▨
		62	12	12	6	3	4	8	8	4	▨	▨	▨	5	3	▨	▨
		72	10	10	6	▨	3	4	7	4	▨	▨	▨	5	3	▨	▨
		92	6	8	4	▨	▨	▨	5	3	▨	▨	▨	5	3	▨	▨
		210	▨	5	3	▨	▨	▨	5	3	▨	▨	▨	5	3	▨	▨
	1/4"ø RAWL CALK-IN W/ 7/8" MIN. EMBEDMENT & 1/4-20 BOLT	48	12	12	9	4	6	12	12	6	3	4	4	8	4	▨	3
		62	12	12	7	3	5	10	11	5	▨	3	3	7	3	▨	▨
		72	12	12	6	3	4	5	9	4	▨	3	3	7	3	▨	▨
		92	8	10	5	▨	3	3	7	3	▨	▨	3	7	3	▨	▨
		210	3	7	3	▨	▨	3	7	3	▨	▨	3	7	3	▨	▨
	1/4"ø RAWL ZAMAC NAILIN W/ 1-1/8" MIN. EMBEDMENT	48	12	12	9	4	5	10	10	6	▨	3	3	6	4	▨	▨
		62	11	11	7	3	4	7	8	5	▨	▨	▨	5	3	▨	▨
		72	10	10	6	▨	3	4	7	4	▨	▨	▨	5	3	▨	▨
		92	6	8	4	▨	▨	▨	5	3	▨	▨	▨	5	3	▨	▨
		210	▨	5	3	▨	▨	▨	5	3	▨	▨	▨	5	3	▨	▨
	1/4"ø FEMALE "PANELMATE" W/ 1-1/4" MIN. EMBEDMENT & 1/4-20 MACHINE SCREW	48	12	12	11	5	7	12	12	8	3	5	5	10	4	▨	3
		62	12	12	8	4	6	11	12	6	3	4	3	8	4	▨	▨
		72	12	12	7	3	5	6	11	5	▨	3	3	8	4	▨	▨
		92	9	12	5	▨	4	3	8	4	▨	▨	3	8	4	▨	▨
		210	3	8	4	▨	▨	3	8	4	▨	▨	3	8	4	▨	▨

EXISTING STRUCTURE	ANCHOR TYPE	NEG. LOAD (W) P.S.F. MAX. (SEE NOTE 1)	3" EDGE DISTANCE														
			SPANS UP TO 5'-8" (SEE NOTE 1)					SPANS UP TO 8'-0" (SEE NOTE 1)					SPANS UP TO 13'-1" (SEE NOTE 1)				
			CONNECTION TYPE 1	2	3	4	5	1	2	3	4	5	1	2	3	4	5
MIN. 3,000 PSI CONCRETE	1/4"ø ITW TAPCON W/ 1-1/4" MIN. EMBEDMENT	48	12	12	12	8	11	12	12	12	5	7	7	12	8	3	4
		62	12	12	12	6	8	12	12	10	4	6	4	12	7	3	4
		72	12	12	12	5	7	9	12	8	3	5	4	12	7	3	4
		92	12	12	9	4	5	4	12	7	3	4	4	12	7	3	4
		210	4	12	7	3	4	4	12	7	3	4	4	12	7	3	4
	1/4"ø RAWL CALK-IN W/ 7/8" MIN. EMBEDMENT & 1/4-20 BOLT	48	12	12	12	12	12	12	12	12	9	12	12	12	11	6	8
		62	12	12	12	10	12	12	12	12	7	11	9	12	10	5	7
		72	12	12	12	9	12	12	12	12	6	9	9	12	10	5	7
		92	12	12	12	7	10	9	12	10	5	7	9	12	10	5	7
		210	9	12	10	5	7	9	12	10	5	7	9	12	10	5	7
	1/4"ø RAWL ZAMAC NAILIN W/ 1-1/8" MIN. EMBEDMENT	48	12	12	12	7	9	12	12	11	4	6	5	11	6	3	3
		62	12	12	12	5	7	12	12	8	3	5	3	10	5	▨	3
		72	12	12	10	4	6	7	12	7	3	4	3	10	5	▨	3
		92	10	12	8	3	4	3	10	5	▨	3	3	10	5	▨	3
		210	3	10	5	▨	3	3	10	5	▨	3	3	10	5	▨	3
	1/4"ø FEMALE "PANELMATE" W/ 1-1/4" MIN. EMBEDMENT & 1/4-20 MACHINE SCREW	48	12	12	12	6	8	12	12	9	4	5	5	10	5	▨	3
		62	12	12	10	4	6	12	12	7	3	4	3	9	4	▨	3
		72	12	12	8	4	5	6	11	6	▨	3	3	9	4	▨	3
		92	9	12	6	3	4	3	9	4	▨	3	3	9	4	▨	3
		210	3	9	4	▨	3	3	9	4	▨	3	3	9	4	▨	3
HOLLOW CONCRETE BLOCK	1/4"ø ITW TAPCON W/ 1-1/4" MIN. EMBEDMENT	48	12	12	11	4	6	12	12	7	3	4	3	7	4	▨	▨
		62	12	12	8	3	4	9	9	6	▨	3	▨	6	4	▨	▨
		72	12	12	7	3	4	4	8	5	▨	▨	▨	6	4	▨	▨
		92	7	9	5	▨	3	▨	6	4	▨	▨	▨	6	4	▨	▨
		210	▨	6	4	▨	▨	▨	6	4	▨	▨	▨	6	4	▨	▨
	1/4"ø RAWL CALK-IN W/ 7/8" MIN. EMBEDMENT & 1/4-20 BOLT	48	12	12	12	6	8	12	12	10	4	6	5	11	6	▨	3
		62	12	12	11	5	6	12	12	8	3	4	3	9	5	▨	3
		72	12	12	10	4	5	7	12	7	3	4	3	9	5	▨	3
		92	10	12	7	3	4	3	9	5	▨	3	3	9	5	▨	3
		210	3	9	5	▨	3	3	9	5	▨	3	3	9	5	▨	3
	1/4"ø RAWL ZAMAC NAILIN W/ 1-1/8" MIN. EMBEDMENT	48	12	12	11	4	5	12	12	8	3	4	3	7	4	▨	▨
		62	12	12	8	3	4	8	9	6	▨	3	▨	6	4	▨	▨
		72	11	11	7	3	3	4	8	5	▨	▨	▨	6	4	▨	▨
		92	6	9	6	▨	3	▨	6	4	▨	▨	▨	6	4	▨	▨
		210	▨	6	4	▨	▨	▨	6	4	▨	▨	▨	6	4	▨	▨
	1/4"ø FEMALE "PANELMATE" W/ 1-1/4" MIN. EMBEDMENT & 1/4-20 MACHINE SCREW	48	12	12	12	6	8	12	12	9	4	5	5	10	5	▨	3
		62	12	12	10	4	6	12	12	7	3	4	3	9	4	▨	3
		72	12	12	8	4	5	6	11	6	▨	3	3	9	4	▨	3
		92	9	12	6	3	4	3	9	4	▨	3	3	9	4	▨	3
		210	3	9	4	▨	3	3	9	4	▨	3	3	9	4	▨	3

05/02/98 09:11

ANCHOR SCHEDULE

FASTENER SPACING REQUIRED (INCHES O.C.) FOR VARIOUS DESIGN LOADS

EXISTING STRUCTURE	ANCHOR TYPE	NEG. LOAD (W) P.S.F. MAX. (SEE NOTE 1)	3/4" EDGE DISTANCE														
			SPANS UP TO 5'-8" (SEE NOTE 1)					SPANS UP TO 8'-0" (SEE NOTE 1)					SPANS UP TO 13'-1" (SEE NOTE 1)				
			CONNECTION TYPE 1	2	3	4	5	1	2	3	4	5	1	2	3	4	5
WOOD	1/4"ø WOOD LAG SCREW W/ 1-3/4" MIN. EMBEDMENT SHEAR PARALLEL OR PERPENDICULAR TO WOOD GRAIN	48	12	12	11	7	12	12	12	8	5	11	10	12	4	3	7
		62	12	12	8	5	12	12	12	6	4	8	7	12	4	▨	6
		72	12	12	7	5	10	12	12	5	3	7	7	12	4	▨	6
		92	12	12	5	3	8	7	12	4	▨	6	7	12	4	▨	6
		210	7	12	4	▨	6	7	12	4	▨	6	7	12	4	▨	6

ANCHOR NOTES:

1. **SPANS AND LOADS SHOWN HERE ARE FOR DETERMINING ANCHOR SPACING ONLY. ALLOWABLE SHUTTER SPAN FOR SPECIFIC LOADS MUST BE LIMITED TO THOSE IN TABLE 1, SHEET 5.**
2. ENTER TABLE BASED ON THE EXISTING STRUCTURE MATERIAL, ANCHOR TYPE AND EDGE DISTANCE. ENTER TABLE WITH THE NEGATIVE DESIGN LOAD AND SHUTTER SPAN OR THE NEXT HIGHEST VALUE SHOWN.
3. ANCHORS SHALL BE INSTALLED IN ACCORDANCE WITH MANUFACTURERS RECOMMENDATIONS.
4. MINIMUM EMBEDMENT AND EDGE DISTANCE EXCLUDES WALL FINISH OR STUCCO.
5. EXISTING STRUCTURE MAY BE CONCRETE, HOLLOW BLOCK, OR WOOD FRAMING. REFERENCE ANCHOR SCHEDULE FOR PROPER ANCHOR TYPE BASED ON TYPE OF EXISTING STRUCTURE.
6. MACHINE SCREWS SHALL HAVE A MINIMUM OF 1/2" ENGAGEMENT OF THREADS IN BASE ANCHOR AND MAY HAVE EITHER A PAN HEAD, TRUSS HEAD, OR WAFER HEAD (SIDEWALK BOLT), U.O.N.
7. WHERE EXISTING STRUCTURE IS WOOD FRAMING, WOOD FRAMING CONDITIONS VARY. FIELD VERIFY THAT FASTENERS ARE INTO ADEQUATE WOOD FRAMING MEMBERS, NOT PLYWOOD. FASTENING TO PLYWOOD IS ACCEPTABLE ONLY FOR SIDE CLOSURE PIECES.
8. WHERE LAG SCREWS FASTEN TO NARROW FACE OF STUD FRAMING, FASTENER SHALL BE LOCATED IN CENTER OF 2x WOOD STUD. 3/4" EDGE DISTANCE IS ACCEPTABLE FOR WOOD FRAMING.
9. FOR BUILD-OUT MOUNT SECTION (J) ANCHOR SPACING SHALL NOT EXCEED 8-1/2" O.C.
10. FOR BUILD-OUT MOUNT SECTION (K) ANCHOR SPACING SHALL NOT EXCEED 6" O.C.

▨ = DO NOT USE ANCHOR.

PRODUCT RENEWED

ACCEPTANCE No. 00-0605.12

EXPIRATION DATE June 27 2003

By Helmy A. Makar

PRODUCT CONTROL DIVISION
BUILDING CODE COMPLIANCE OFFICE

APPROVED AS COMPLYING WITH THE SOUTH FLORIDA BUILDING CODE

DATE JUNE 29 1998

BY Helmy A. Makar

PRODUCT CONTROL DIVISION
BUILDING CODE COMPLIANCE OFFICE
ACCEPTANCE NO. 98-0605.04

KNEZEVICH & ASSOCIATES, INC.
CONSULTING ENGINEERS • PRODUCT TESTING
641 MOKENA DRIVE • MIAMI SPRINGS, FLORIDA 33166
MIAMI (305) 883-9571 FT. LAUDERDALE (954) 677-9500
FAX: (305) 883-9572

COPYRIGHT 1998 KNEZEVICH & ASSOCIATES, INC.
HT100 LICENSED BY HI-TECH SHUTTER GROUP, INC.

HT100 ACCORDION SHUTTER

METAL SHIELD CORPORATION
2139 UNIVERSITY DRIVE, SUITE 302
CORAL SPRINGS, FL 33071
DADE: (305) 625-3511 BROWARD (954) 341-1616

revisions no.	date	by	description
2	10/10/96		CLARIFY DETAILS
3	11/26/97	JWK	REVISE FASTENERS
4	01/14/98	JWK	FASTENER NOTES
5	04/30/98	JWK	SLAT 2/REV2,4 DESC.

HTSG I.D. #0502989616 8D

V.J. KNEZEVICH
PROFESSIONAL ENGINEER
FL License No: PE 0010983

MAY 12 1998

date 07/23/96
scale AS NOTED
drawn by MC
design by VJK
checked by VJK
drawing no. 98-838
sheet 6 of 6