MIAMI-DADE COUNTY, FLORIDA
METRO-DADE FLAGLER BUILDING

BUILDING CODE COMPLIANCE OFFICE
METRO-DADE FLAGLER BUILDING
140 WEST FLAGLER STREET, SUITE 1603
MIAMI, FLORIDA 33130-1563
(305) 375-2901 FAX (305) 375-2908

CONTRACTOR LICENSING SECTION
(305) 375-2527 FAX (305) 375-2558

CONTRACTOR ENFORCEMENT DIVISION
(305) 375-2966 FAX (305) 375-2908

PRODUCT CONTROL DIVISION
(305) 375-2902 FAX (305) 372-6339

PRODUCT CONTROL NOTICE OF ACCEPTANCE

Firedoor Corporation of Florida
1350 N.W. 74 Street
Miami ,FL 33147

Your application for Notice of Acceptance (NOA) of:
6070-HMD-F Double Outswing Commercial Steel Door
under Chapter 8 of the Code of Miami-Dade County governing the use of Alternate Materials and Types of Construction, and completely described herein, has been recommended for acceptance by the Miami-Dade County Building Code Compliance Office (BCCO) under the conditions specified herein.

This NOA shall not be valid after the expiration date stated below. BCCO reserves the right to secure this product or material at any time from a jobsite or manufacturer's plant for quality control testing. If this product or material fails to perform in the approved manner, BCCO may revoke, modify, or suspend the use of such product or material immediately. BCCO reserves the right to revoke this approval, if it is determined by BCCO that this product or material fails to meet the requirements of the South Florida Building Code.

The expense of such testing will be incurred by the manufacturer.

ACCEPTANCE NO.: 00-0623.01
EXPIRES: 06/26/2003

Raul Rodriguez
Chief Product Control Division

THIS IS THE COVERSHEET, SEE ADDITIONAL PAGES FOR SPECIFIC AND GENERAL CONDITIONS
BUILDING CODE & PRODUCT REVIEW COMMITTEE

This application for Product Approval has been reviewed by the BCCO and approved by the Building Code and Product Review Committee to be used in Miami-Dade County, Florida under the conditions set forth above.

Francisco J. Quintana, R.A.
Director
Miami-Dade County
Building Code Compliance Office

APPROVED: 09/28/2000

Firedoor Corporation of Florida

ACCEPTANCE No.: 00-0623.01

APPROVED : SEP 2 8 2000

EXPIRES : June 26, 2003

NOTICE OF ACCEPTANCE: SPECIFIC CONDITIONS

1. SCOPE

1.1 This **renews** the Notice of Acceptance No. 96-1219.06, which was issued on June 26, 1997. This approves an outswing commercial steel door, as described in Section 2 of this Notice of Acceptance, designed to comply with the South Florida Building Code (SFBC), 1994 Edition for Miami-Dade County, for the locations where the pressure requirements, as determined by SFBC Chapter 23, do not exceed the Design Pressure Rating values indicated in the approved drawings.

2. PRODUCT DESCRIPTION

2.1 The **"6070-HMD-F" Double Outswing Commercial Steel Door - Impact Resistant** and its components shall be constructed in strict compliance with the following documents: Drawing No **96-1219.06**, titled "6070 HMDF Double Outswinging Commercial Metal Door," Sheets 1 through 7 of 7, prepared by Firedoor Corporation of Florida, dated June 09, 1997, bearing the Miami-Dade County Product Control approval stamp with the Notice of Acceptance number and approval date by the Miami-Dade County Product Control Division. These documents shall hereinafter be referred to as the approved drawings.

3. LIMITATIONS

3.1 This approval applies to single unit applications of pair of doors and single door only, as shown in approved drawings. Single door units shall include all components described in the active leaf of this approval.

4. INSTALLATION

4.1 The outswing commercial steel door and its components shall be installed in strict compliance with the approved drawings.

4.2 Hurricane protection system (shutters): the installation of this unit **will not require** a hurricane protection system.

5. LABELING

5.1 Each unit shall bear a permanent label with the manufacturer's name or logo, city, state and following statement: "Miami-Dade County Product Control Approved".

6. BUILDING PERMIT REQUIREMENTS

6.1 Application for building permit shall be accompanied by copies of the following:

6.1.1 This Notice of Acceptance

6.1.2 Duplicate copies of the approved drawings, as identified in Section 2 of this Notice of Acceptance, clearly marked to show the components selected for the proposed installation.

6.1.3 Any other documents required by the Building Official or the South Florida Building Code (SFBC) in order to properly evaluate the installation of this system.

Manuel Perez

Manuel Perez, P. E., Product Control Examiner
Product Control Division

Firedoor Corporation of Florida

ACCEPTANCE No.: 00-0623.01

APPROVED : SEP 2 8 2000

EXPIRES : June 26, 2003

NOTICE OF ACCEPTANCE: STANDARD CONDITIONS

1. Renewal of this Acceptance (approval) shall be considered after a renewal application has been filed and the original submitted documentation, including test supporting data, engineering documents, are no older than eight (8) years.

2. Any and all approved products shall be permanently labeled with the manufacturer's name, city, state, and the following statement: "Miami-Dade County Product Control Approved", or as specifically stated in the specific conditions of this Acceptance.

3. Renewals of Acceptance will not be considered if:
   a) There has been a change in the South Florida Building Code affecting the evaluation of this product and the product is not in compliance with the code changes;
   b) The product is no longer the same product (identical) as the one originally approved;
   c) If the Acceptance holder has not complied with all the requirements of this acceptance, including the correct installation of the product;
   d) The engineer who originally prepared, signed and sealed the required documentation initially submitted is no longer practicing the engineering profession.

4. Any revision or change in the materials, use, and/or manufacture of the product or process shall automatically be cause for termination of this Acceptance, unless prior written approval has been requested (through the filing of a revision application with appropriate fee) and granted by this office.

5. Any of the following shall also be grounds for removal of this Acceptance:
   a) Unsatisfactory performance of this product or process.
   b) Misuse of this Acceptance as an endorsement of any product, for sales, advertising or any other purpose.

6. The Notice of Acceptance number preceded by the words Miami-Dade County, Florida, and followed by the expiration date may be displayed in advertising literature. If any portion of the Notice of Acceptance is displayed, then it shall be done in its entirety.

7. A copy of this Acceptance as well as approved drawings and other documents, where it applies, shall be provided to the user by the manufacturer or its distributors and shall be available for inspection at the job site at all time. The engineer need not reseal the copies.

8. Failure to comply with any section of this Acceptance shall be cause for termination and removal of Acceptance.

9. This Notice of Acceptance consists of pages 1, 2 and this last page 3.

Manuel Perez

Manuel Perez, P. E., Product Control Examiner
Product Control Division

END OF THIS ACCEPTANCE

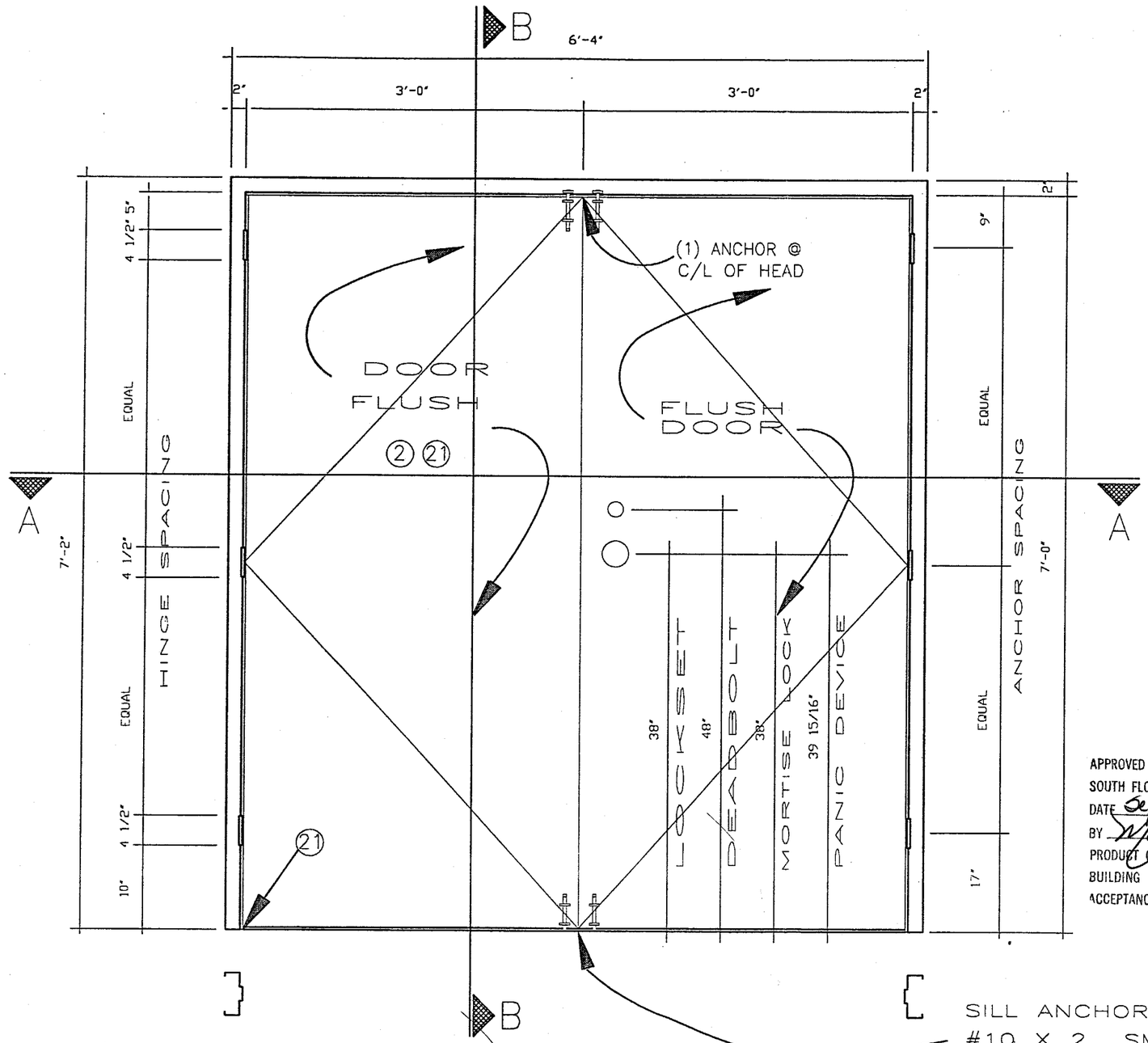

SILL ANCHORED W/ (6)
#10 X 2 SMS W/ LEAD.
ANCHOR SPACED @ 12" O.C.

DOUBLE UNIT FRAME/DOOR ELEVATION

APPROVED AS COMPLYING WITH THE
SOUTH FLORIDA BUILDING CODE
DATE September 28, 2000
BY Manuel Serra
PRODUCT CONTROL DIVISION
BUILDING CODE COMPLIANCE OFFICE
ACCEPTANCE NO. 00-0623.01

FIREDOOR

THE COMPLETE RESOURCE FOR HOLLOW METAL

FIREDOOR CORPORATION OF FLORIDA

1350 NORTWEST 74th STREET
MIAMI, FLORIDA 33147
PHONE: (305) 691-1500
FAX: (305) 836-4797

DESIGN PRESSURE RATING

POSITIVE	NEGATIVE
+ 56.0 PSF	– 72.0 PSF

SEAL

FRANK J. SIMON P.E.
LICENCE No. 36365
REGESTERED ENGINEER

6070 HMDF

DOUBLE OUTSWINGING COMMERCIAL METAL DOOR

DATE	DRAWN BY
06/09/97	Francisco

SHEET TITLE:

ELEVATION (PAIR)

SHEET NUMBER:	DRAWING NUMBER:
1 OF 7	96-1219.06

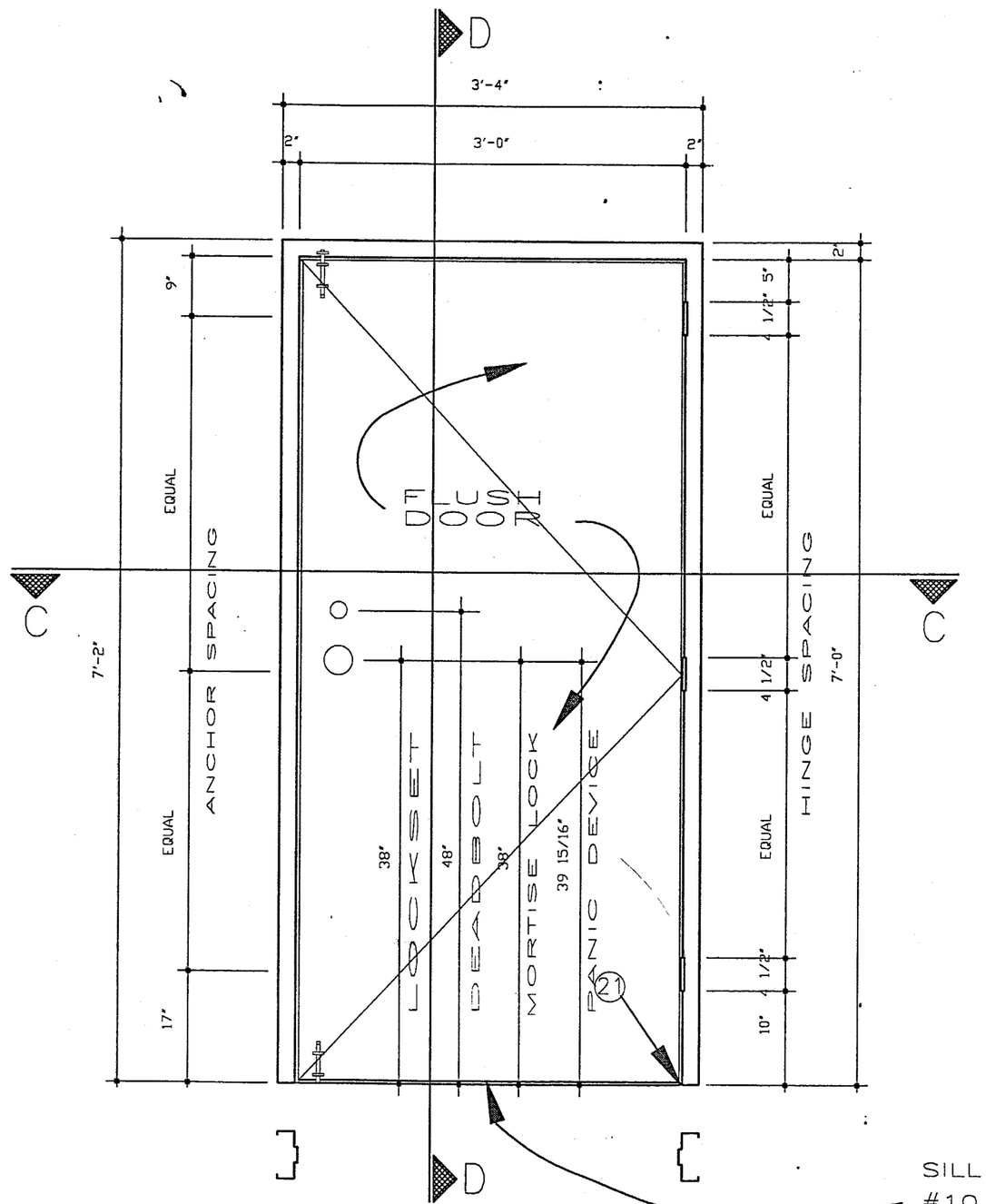

SILL ANCHORED W/ (3) #10 X 2 SMS W/ LEAD. ANCHOR SPACED @ 12" O.C.

SINGLE UNIT FRAME/DOOR ELEVATION

APPROVED AS COMPLYING WITH THE SOUTH FLORIDA BUILDING CODE
DATE September 28, 2000
BY Manuel Perez
PRODUCT CONTROL DIVISION
BUILDING CODE COMPLIANCE OFFICE
ACCEPTANCE NO. 00-0623.01

THE COMPLETE RESOURCE FOR HOLLOW METAL
FIREDOOR

FIREDOOR CORPORATION OF FLORIDA
1350 NORTWEST 74th STREET
MIAMI, FLORIDA 33147
PHONE: (305) 691-1500
FAX: (305) 836-4797

DESIGN PRESSURE RATING

POSITIVE	NEGATIVE
+ 56.0 PSF	– 72.0 PSF

SEAL

FRANK J. SIMON P.E.
LICENCE No. 36365
REGESTERED ENGINEER

3070307DFMDF

SINGLE OUTSWINGING COMMERCIAL METAL DOOR

DATE	DRAWN BY
06/09/97	Francisco

SHEET TITLE:
ELEVATION (SINGLE)

SHEET NUMBER:	DRAWING NUMBER:
2 OF 7	96-1219.06

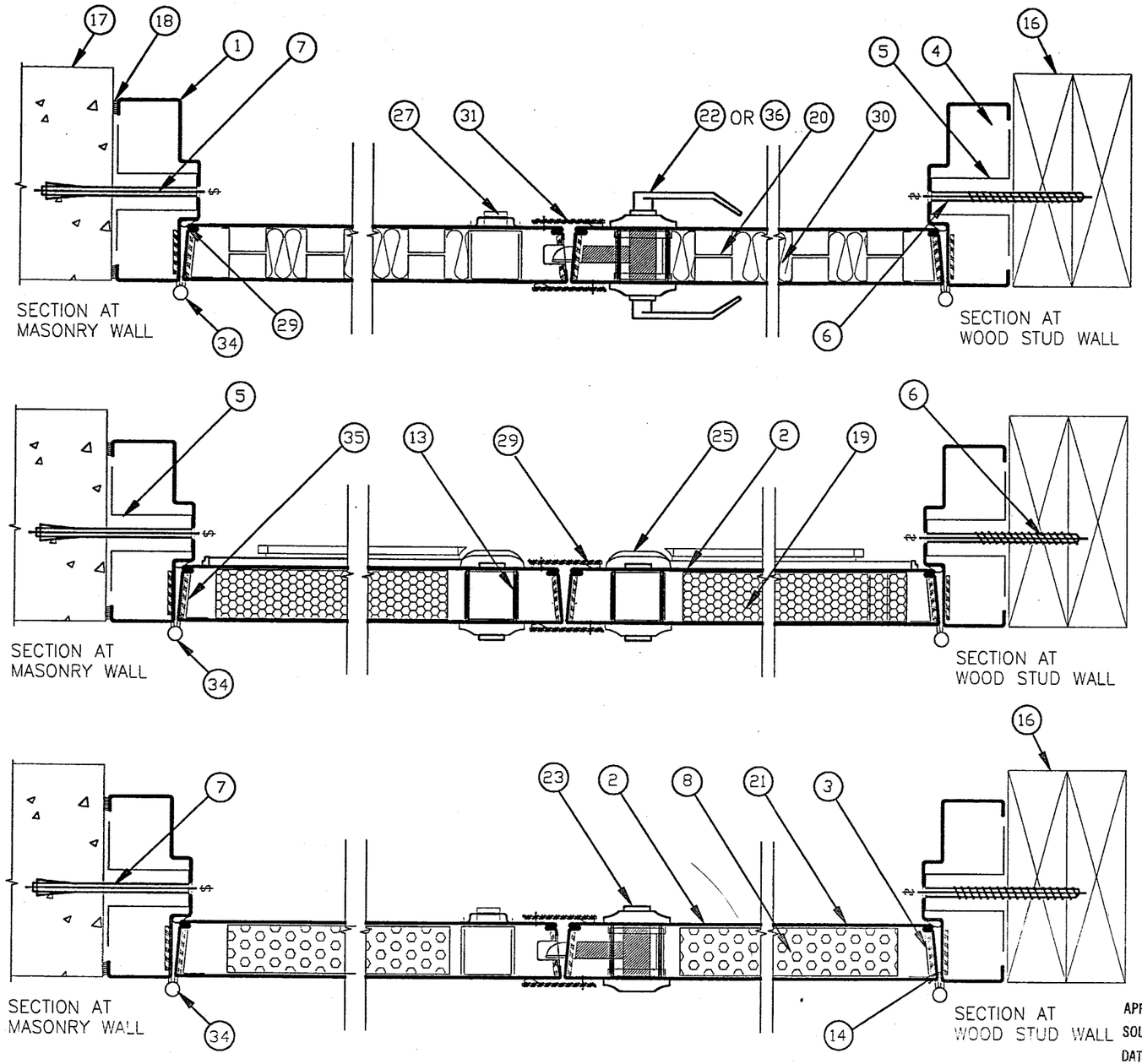

SECTIONS: A — A

APPROVED AS COMPLYING WITH THE SOUTH FLORIDA BUILDING CODE
DATE September 28, 2000
BY Manuel Diaz
PRODUCT CONTROL DIVISION
BUILDING CODE COMPLIANCE OFFICE
ACCEPTANCE NO. 00-0623.01

FIREDOOR

THE COMPLETE RESOURCE FOR HOLLOW METAL

FIREDOOR CORPORATION OF FLORIDA

1350 NORTWEST 74th STREET
MIAMI, FLORIDA 33147
PHONE: (305) 691-1500
FAX: (305) 836-4797

DESIGN PRESSURE RATING

POSITIVE	NEGATIVE
+ 56.0 PSF	− 72.0 PSF

SEAL

FRANK J. SIMON P.E.
LICENCE No. 36365
REGESTERED ENGINEER

DATE	DRAWN BY
06/09/97	Francisco

SHEET TITLE: SECTIONS (PAIR)

SHEET NUMBER:	DRAWING NUMBER:
3 OF 7	96-1219.06

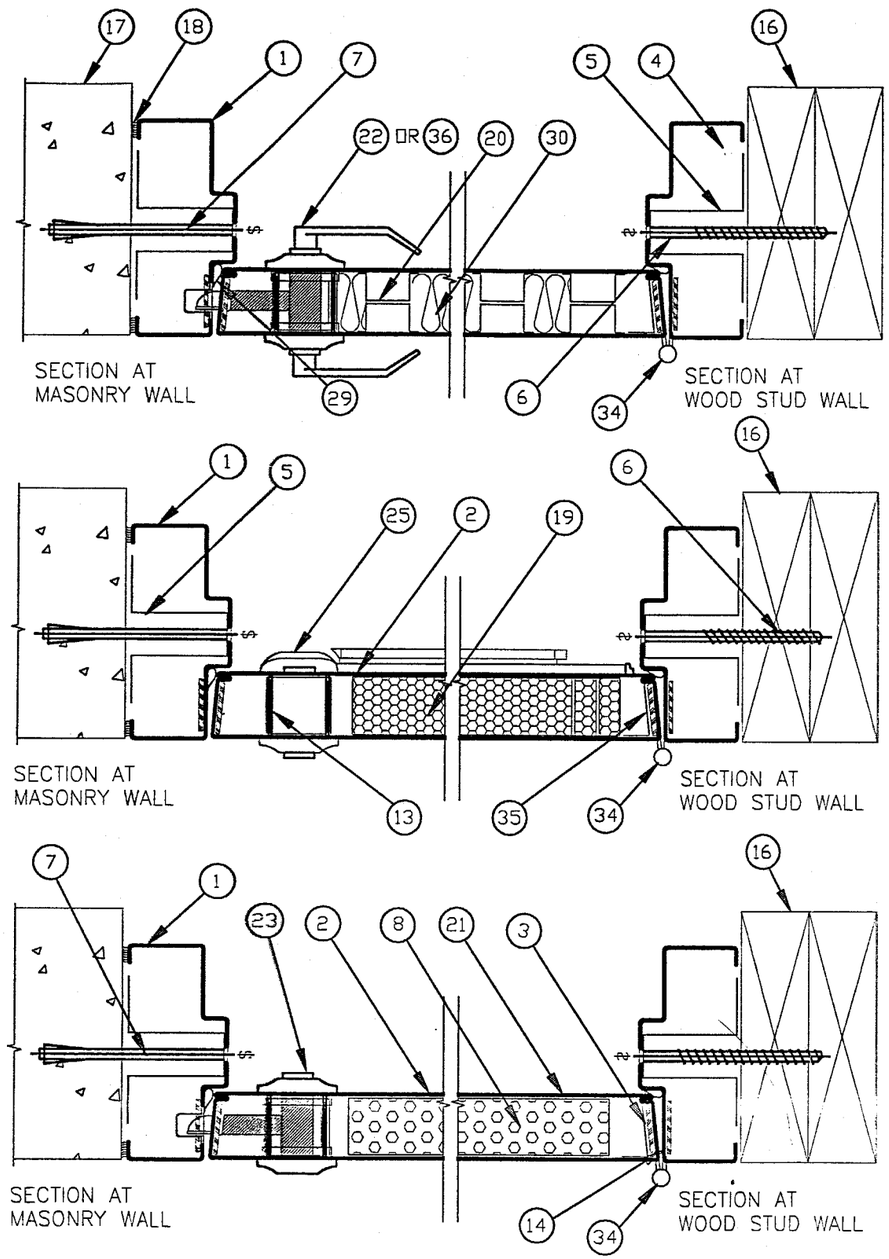

SECTIONS: C — C

APPROVED AS COMPLYING WITH THE
SOUTH FLORIDA BUILDING CODE
DATE September 28, 2000
BY Manuel Perez
PRODUCT CONTROL DIVISION
BUILDING CODE COMPLIANCE OFFICE
ACCEPTANCE NO. 00-0623.01

FIREDOOR

THE COMPLETE RESOURCE FOR HOLLOW METAL

FIREDOOR CORPORATION OF FLORIDA

1350 NORTWEST 74th STREET
MIAMI, FLORIDA 33147
PHONE: (305) 691-1500
FAX: (305) 836-4797

DESIGN PRESSURE RATING

POSITIVE	NEGATIVE
+ 56.0 PSF	− 72.0 PSF

SEAL

FRANK J. SIMON P.E.
LICENCE No. 36365
REGESTERED ENGINEER

DATE	DRAWN BY
06/09/97	Francisco

SHEET TITLE: SECTIONS (SINGLE)

SHEET NUMBER:	DRAWING NUMBER:
4 OF 7	96-1219.06

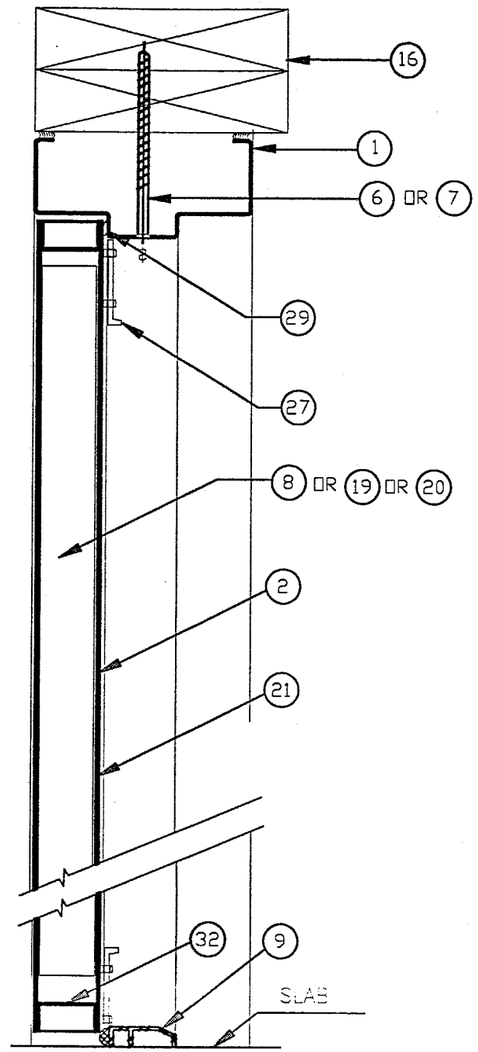

SECTION: B—B

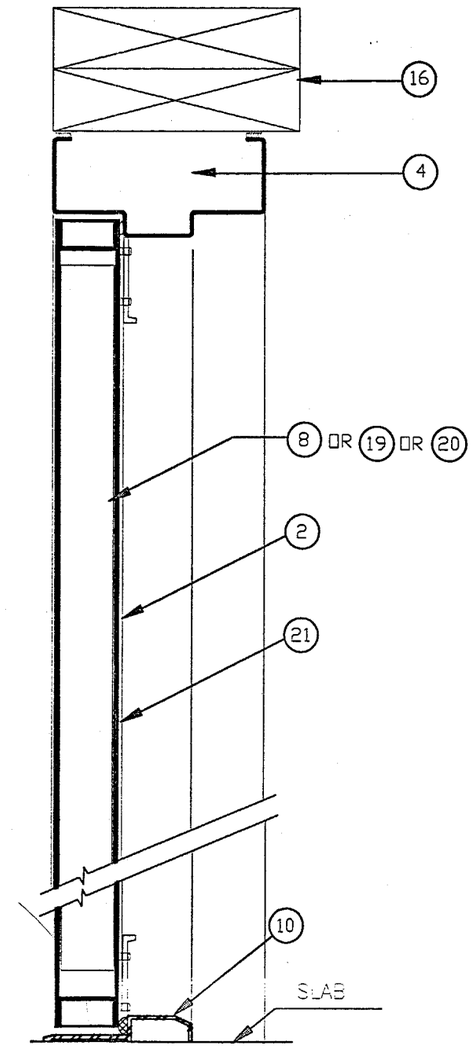

SECTION: D—D

APPROVED AS COMPLYING WITH THE
SOUTH FLORIDA BUILDING CODE
DATE September 28, 2000
BY Samuel Perez
PRODUCT CONTROL DIVISION
BUILDING CODE COMPLIANCE OFFICE
ACCEPTANCE NO. 00-0623.01

FIREDOOR THE COMPLETE RESOURCE FOR HOLLOW METAL

FIREDOOR CORPORATION OF FLORIDA

1350 NORTWEST 74th STREET
MIAMI, FLORIDA 33147
PHONE: (305) 691-1500
FAX: (305) 836-4797

DESIGN PRESSURE RATING

POSITIVE	NEGATIVE
+ 56.0 PSF	− 72.0 PSF

SEAL

FRANK J. SIMON P.E.
LICENCE No. 36365
REGESTERED ENGINEER

DATE	DRAWN BY
06/09/97	Francisco

SHEET TITLE:
SECTIONS (B—B) & (D—D)

SHEET NUMBER:	DRAWING NUMBER:
5 OF 7	96—1219.06

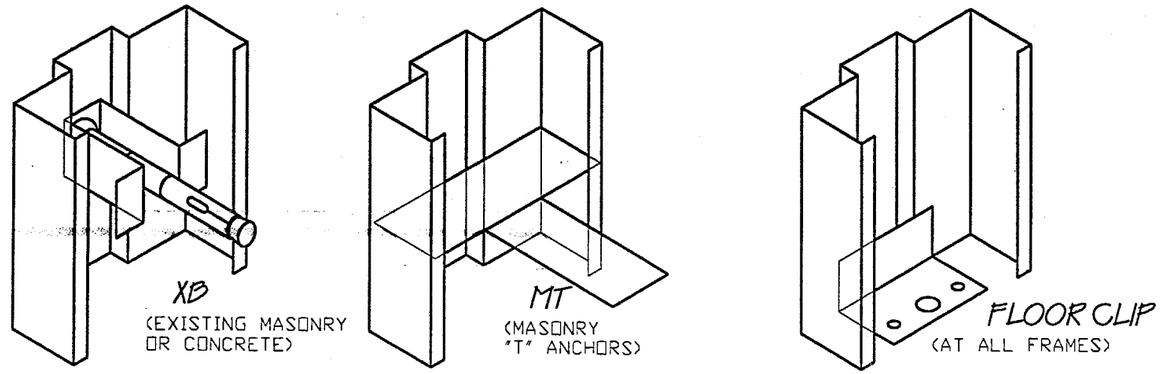

ANCHORS TYPE

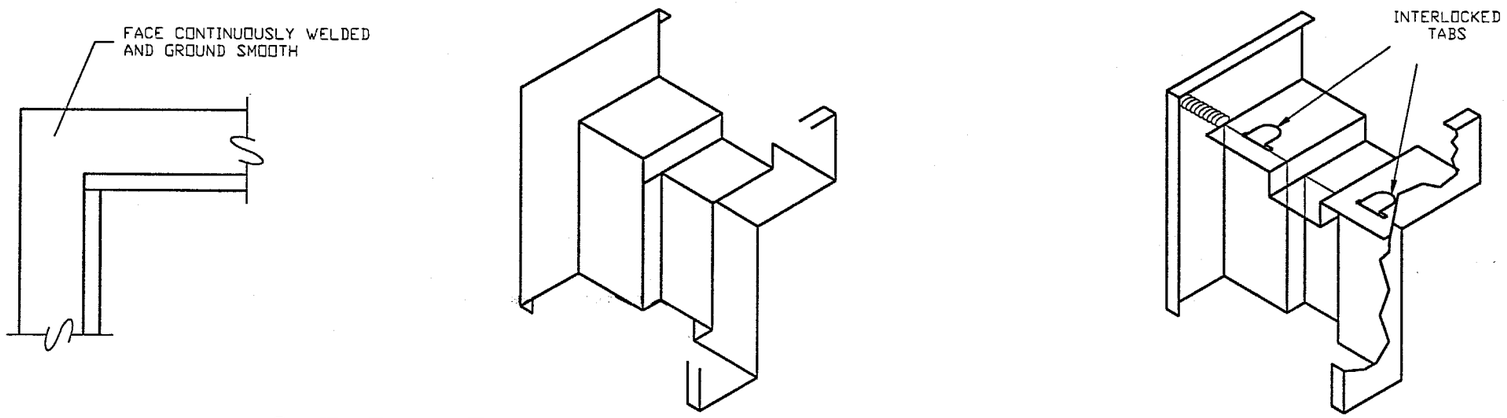

CORNER CONSTRUCTION

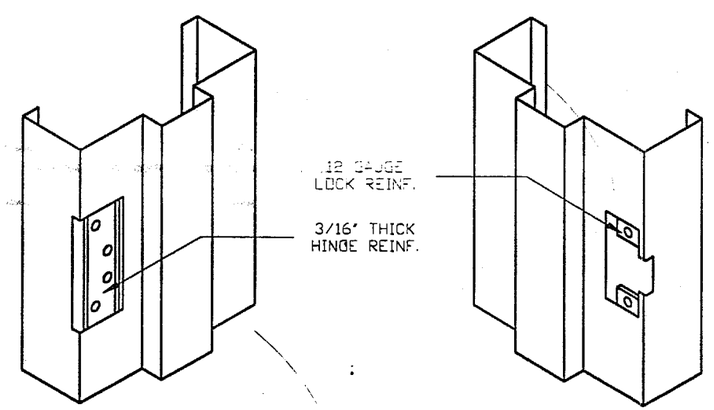

HINGE PREPARATION

STRIKE PREPARATION

STANDARD HDWE PREPARATION

APPROVED AS COMPLYING WITH THE
SOUTH FLORIDA BUILDING CODE
DATE September 28, 2000
BY Manuel Perez
PRODUCT CONTROL DIVISION
BUILDING CODE COMPLIANCE OFFICE
ACCEPTANCE NO. 00-0623.01

FIREDOOR THE COMPLETE RESOURCE FOR HOLLOW METAL

FIREDOOR CORPORATION OF FLORIDA

1350 NORTWEST 74th STREET
MIAMI, FLORIDA 33147
PHONE: (305) 691-1500
FAX: (305) 836-4797

DESIGN PRESSURE RATING

POSITIVE	NEGATIVE
+ 56.0 PSF	- 72.0 PSF

SEAL

FRANK J. SIMON P.E.
LICENCE No. 36365
REGESTERED ENGINEER

DATE	DRAWN BY
06/09/97	Francisco

SHEET TITLE:
FRAME DETAILS

SHEET NUMBER:	DRAWING NUMBER:
6 OF 7	96-1219.06

BILL OF MATERIALS

ITEM	QUANTITY	DESCRIPTION
1	1	16 (.059 MIN.) GAUGE WELDED FRAME (GALVANIZED OR STAILESS STEEL)
2	1	18 (.044 MIN.) GAUGE FLUSH DOOR (GALVANIZED OR STAILESS STEEL) MIN YEILD STRENGTH OF FY=43.7 KSI
3	4	1 1/4"X10"X3/16" HINGE REINFORCEMENT (DOOR)
4	1	FRAME GROUT
5	6	(3) PER JAMB 2"X2 5/8"X18 GAUGE BOLT SPACER
6	6	(3) PER JAMB 3/8"X5" FLAT HEAD WOOD SCREW (OR)
7	6	(3) PER JAMB 3/8"X5 FLAT HEAD SLEEVE ANCHOR
8	1	POLYSTYRENE CORE.
9	1	2051AV THRESHOLD 1"X3 5/16" PEMKO (OR)
10	1	2005AV THRESHOLD 1/2"X5" PEMKO
11	2	1 1/8"X3 1/8"X12 GAUGE LOCK REINFORCEMENT
12	2	(1) PER JAMB 1"X1 3/4"X4 1/2"X18 GAUGE FLOOR ANGLE ANCHOR
13	2	1 1/2"X3 5/8"X.10", 1 1/2"X4"X.10" OVERLAPPING CHANNEL
14	4	1 1/4"X10"X3/16" HINGE REINFORCEMENT (FRAME)
15	1	12 GAUGE STRIKE REINFORCEMENT
16	2	2"X12" WOOD BUCK CHAMBER OR
17	1	8" C.M.U. BLOCK CHAMBER
18	1	CLEAR SILICONE SEALANT BY G.E.
19	1	HONEYCOMB CORE
20	1	STEEL STIFFENED CORE 3 5/8"X7/8"X83"X.026 (5 PAIRS)
21	1	RUST INHIBITIVE PRIMER
22	1	MORTISE LOCK L9053 SCHLAGE
23	1	DEADBOLT LOCK B660 SCHLAGE
24	1	CYLINDRICAL LOCK AL70PD SCHLAGE
25	1	PANIC DEVICE 9927NL VON DUPRIN OR
26	1	PANIC DEVICE 9927 EO VON DUPRIN
27	2	SURFACE BOLT UL453 TACO OR
28	2	MANUAL FLUSHBOLT FB6 GLYNN JOHNSON
29	1	S88 JAMB WEATHERSTRIP PEMKO
30	1	INSULATION
31	1	2"X83 3/4"X.10 FLAT ASTRAGAL, #8X1/2" SMS 10" O.C.
32	2	18 GAUGE INVERTED CHANNEL
33	1	PK 22 PRESSURE SENSITIVE GASKET PEMKO
34	3	4 1/2"X4 1/2"X.134 F179 STEEL HINGES STANLEY
35	1	1 3/8"X1 5/8"X83"X.054 THICK ANGLE STIFFENER
36	1	3 POINT LOCK SYSTEM

APPROVED AS COMPLYING WITH THE
SOUTH FLORIDA BUILDING CODE
DATE September 28, 2000
BY Manuel Sarz
PRODUCT CONTROL DIVISION
BUILDING CODE COMPLIANCE OFFICE
ACCEPTANCE NO. 00-0623.01

FIREDOOR THE COMPLETE RESOURCE FOR HOLLOW METAL

FIREDOOR CORPORATION OF FLORIDA

1350 NORTWEST 74th STREET
MIAMI, FLORIDA 33147
PHONE: (305) 691-1500
FAX: (305) 836-4797

DESIGN PRESSURE RATING

POSITIVE	NEGATIVE
+ 56.0 PSF	- 72.0 PSF

SEAL

FRANK J. SIMON P.E.
LICENCE No. 36365
REGESTERED ENGINEER

DATE	DRAWN BY
06/09/97	Francisco

SHEET TITLE: BILL OF MATERIALS

SHEET NUMBER:	DRAWING NUMBER:
7 OF 7	96-1219.06