MIAMI-DADE

MIAMI-DADE COUNTY, FLORIDA
METRO-DADE FLAGLER BUILDING

BUILDING CODE COMPLIANCE OFFICE
METRO-DADE FLAGLER BUILDING
140 WEST FLAGLER STREET, SUITE 1603
MIAMI, FLORIDA 33130-1563
(305) 375-2901 FAX (305) 375-2908

CONTRACTOR LICENSING SECTION
(305) 375-2527 FAX (305) 375-2558

CONTRACTOR ENFORCEMENT DIVISION
(305) 375-2966 FAX (305) 375-2908

PRODUCT CONTROL DIVISION
(305) 375-2902 FAX (305) 372-6339

PRODUCT CONTROL NOTICE OF ACCEPTANCE

U.S. Door & Building Components
10221 Rocket Boulevard
Orlando ,FL 32824

Your application for Notice of Acceptance (NOA) of:
8' Wide Continuous Sheet Rolling Door
under Chapter 8 of the Code of Miami-Dade County governing the use of Alternate Materials and Types of Construction, and completely described herein, has been recommended for acceptance by the Miami-Dade County Building Code Compliance Office (BCCO) under the conditions specified herein.

This NOA shall not be valid after the expiration date stated below. BCCO reserves the right to secure this product or material at any time from a jobsite or manufacturer's plant for quality control testing. If this product or material fails to perform in the approved manner, BCCO may revoke, modify, or suspend the use of such product or material immediately. BCCO reserves the right to revoke this approval, if it is determined by BCCO that this product or material fails to meet the requirements of the South Florida Building Code.

The expense of such testing will be incurred by the manufacturer.

ACCEPTANCE NO.: 00-0628.03
EXPIRES: 08/07/2003

Raul Rodriguez
Chief Product Control Division

THIS IS THE COVERSHEET, SEE ADDITIONAL PAGES FOR SPECIFIC AND GENERAL CONDITIONS
BUILDING CODE & PRODUCT REVIEW COMMITTEE

This application for Product Approval has been reviewed by the BCCO and approved by the Building Code and Product Review Committee to be used in Miami-Dade County, Florida under the conditions set forth above.

Francisco J. Quintana, R.A.
Director
Miami-Dade County
Building Code Compliance Office

APPROVED: 09/14/2000

U.S. Door & Building Components.

ACCEPTANCE NO: 00-0628.03

APPROVED : SEP 14 2000

EXPIRES : 08/07/2003

NOTICE OF ACCEPTANCE: SPECIFIC CONDITIONS

1.0 SCOPE

1.1 This revises & renews the Notice of Acceptance No. 96-1105.01, which was issued on 08/07/97. It approves a continuous sheet-rolling door with maximum dimensions of 8'-0" wide x 8'-0" high as described in section 2 of this Notice of Acceptance. It is designed to comply with the South Florida Building Code, 1994 edition for Miami-Dace County (S.F.B.C.). For the locations where the pressure requirements, as determined by the S.F.B.C. chapter 23, do not exceed the design pressure rating values indicated on the approved drawings.

2.0 PRODUCT DESCRIPTION:

2.1 The **US Continuous Sheet Rolling Door** and its components shall be built in strict compliance with the following documents: Drawing No. R7020009, titled "Model 565-DCC", prepared by US Door & Building Components, sheets 1 of 1, dated 09/03/96 and with latest revision on 06/15/00. The drawing shall bear the Miami-Dade County Product Control approval stamp with the Notice of Acceptance number and approval date by the Miami Dade Product Control Division. These documents shall hereinafter be referred to as the approved drawings.

3.0 LIMITATION:

3.1 Units with dimensions equal to or smaller than those shown on the approved drawing shall qualify under this approval.

4.0 INSTALLATION:

4.1 The Roll-Up Door and its components shall be installed in strict compliance with the approved drawings.
4.2 The installation of this door does **not require** a hurricane protection system.
4.3. The door operating mechanism (not included on this approval) shall be certified by Underwriters Laboratories or other recognized agency.

5.0 LABELLING

5.1 Each door shall bear a permanent label with the manufacturer's name or logo, city, state and the following statement "Miami Dade County Product Control Approved"

6.0 BUILDING PERMIT REQUIREMENTS.

6.1 Application for Building Permit shall be accompanied by copies of the following:
6.1.1 This Notice of Acceptance including the approved drawing as identified in section 2; clearly marked to Show the components selected for the proposed installation.
6.1.3 Any other document required by the building Official or the S.F.B.C. in order to properly evaluate the installation of this system.

Candido Font, PE, Sr. Product Control Examiner
Product Control Division

U. S. Door & Building Components.

ACCEPTANCE NO : 00-0628.03

APPROVED : SEP 1 4 2000

EXPIRES : 08/07/2003

NOTICE OF ACCEPTANCE STANDARD CONDITIONS

1. Renewal of this Acceptance (approval) shall be considered after a renewal application has been filed and the original submitted documents, including test-supporting data, engineering documents, are no older than eight (8) years.
2. Any and all approved products shall be permanently labeled with the manufacturer's name, city, state and the following statement: "Miami-Dade County Product Control Approved", or as specifically stated in the specific conditions of this Acceptance.
3. Renewals of Acceptance will not be considered if:
   a) There has been a change in the South Florida Building Code affecting the evaluation of this product and the product is not in compliance with the code changes;
   b) The product is no longer the same product (identical) as the one originally approved;
   c) If the Acceptance holder has not complied with all the requirements of this acceptance, including the correct installation of the product;
   d) The engineer, who originally prepared, signed and sealed the required documentation initially submitted, is no longer practicing the engineering professions.
4. Any revision or change in the materials, use, and/or manufacture of the product or process shall automatically be cause for termination of this Acceptance, unless prior written approval has been requested (through the filing of a revision application with appropriate fee) and granted by this office.
5. Any of the following shall also be grounds for removal of this Acceptance:
   a) Unsatisfactory performance of this product or process;
   b) Misuse of this Acceptance as an endorsement of any product, for sales, advertising or any other purpose.
6. The Notice of Acceptance number preceded by the words Miami-Dade County, Florida, and followed by the expiration date may be displayed in advertising literature. If any portion of the Notice of Acceptance is displayed, then it shall be done in its entirety.
7. A copy of this Acceptance as well as approved drawings and other documents, where it applies, shall be provided to the user by the manufacturer or its distributors and shall be available for inspection at the job site at all times. The engineer need not reseal the copies.
8. Failure to comply with any section of this Acceptance shall be cause for termination and removal of Acceptance.
9. This Acceptance contains pages 1, 2, and this last page 3.

Candido Font, PE, Sr. Product Control Examiner
Product Control Division

END OF THIS ACCEPTANCE

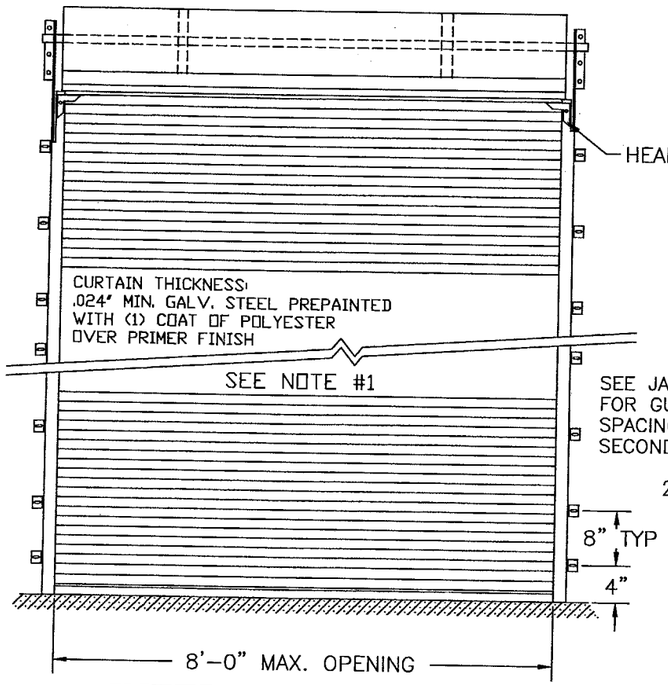

INTERIOR ELEVATION

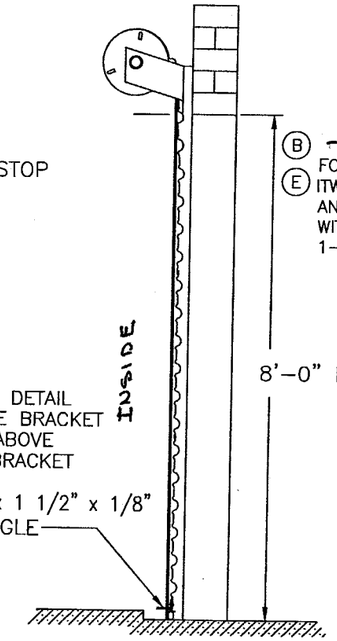

SIDE ELEVATION

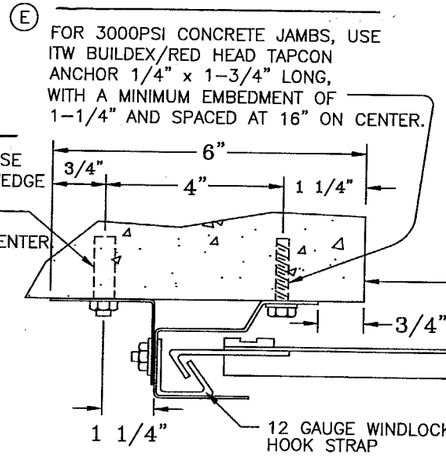

CONCRETE JAMB

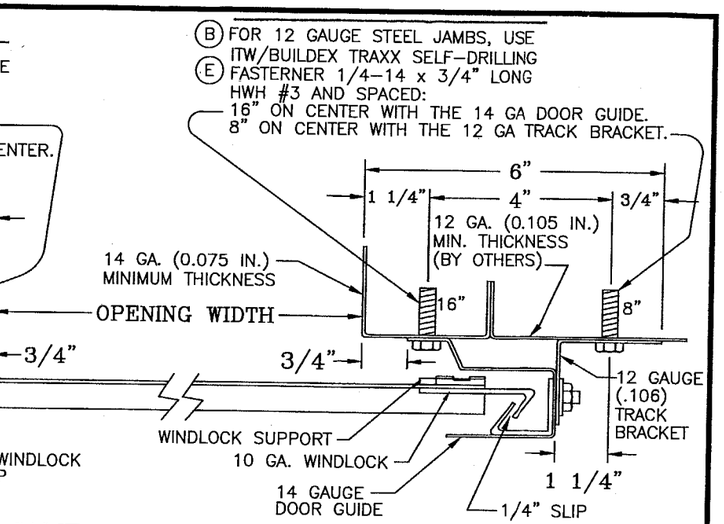

STEEL JAMB

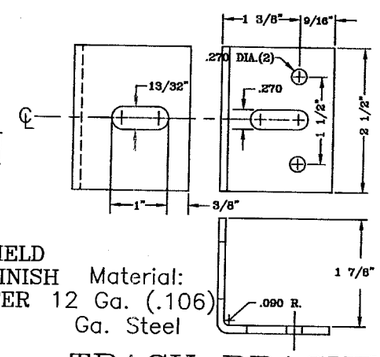

TRACK BRACKET

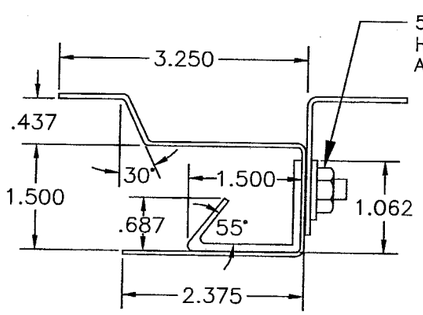

GUIDE DETAIL

MODEL 565-DCC

8' X 7' AND 8' x 8'

46 PSF POSITIVE/54 PSF NEGATIVE

NOTE #1: (C) STEEL USED IS .024" (24 GA.) GALV., ASTM A-446 GRADE "A" WITH MINIMUM YIELD STRENGTH OF 33,000 PSI AND AN ULTIMATE YIELD STRENGTH OF 45,000 PSI. FINISH IS G-90 GALVANIZED OR G-60 GALVANIZED WITH A BAKED ON PRIMER POLYESTER TOP COAT ON BOTH SIDES.

WINDLOCKS STAMPED FROM 10 GAUGE GALVANIZED STEEL OF COMMERCIAL QUALITY AND RIVETED TO EACH CORRUGATION IN SHEET (6 WINDLOCKS AT EACH END OF EACH SHEET). WINDLOCK ATTACHED WITH TWO 3/16" STEEL POP RIVETS SUPPORTED BY 16 GAUGE STEEL BACK-UP PLATES ON EXTERIOR OF CURTAIN.

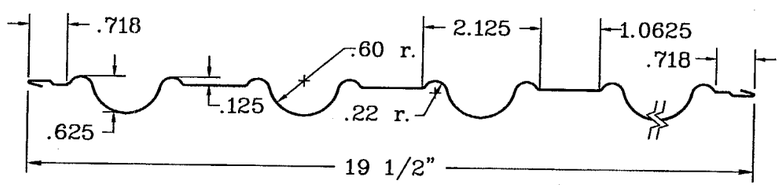

CORRUGATED SHEET

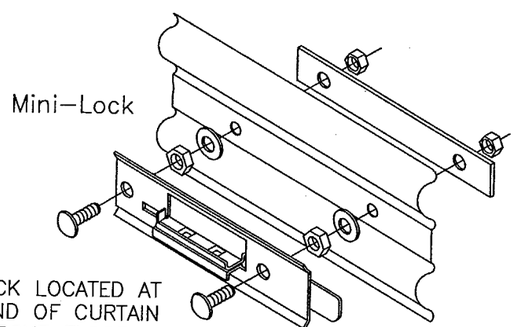

ONE LOCK LOCATED AT EACH END OF CURTAIN AT 6" ABOVE FLOOR

SLIDE BAR LOCK

(A) STRUCTURE MUST BE DESIGNED TO SUPPORT FORCES F1, F2 & F3 (SHOWN AS LB/FT OF OPENING HEIGHT) AT EACH JAMB. VALUES ARE SHOWN IN CHART BELOW.

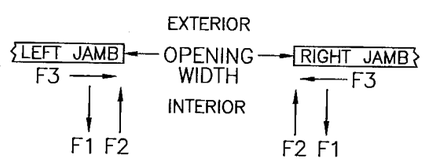

FORCES ON STRUCTURE

JAMB TYPE	POSITIVE			NEGATIVE		
	F1	F2	F3	F1	F2	F3
STEEL	370	165	734	284	521	918
CONCRETE BLOCK	370	165	734	284	521	918

APPROVED AS COMPLYING WITH THE SOUTH FLORIDA BUILDING CODE
DATE September 14, 2000
BY
PRODUCT CONTROL DIVISION
BUILDING CODE COMPLIANCE OFFICE
ACCEPTANCE NO. 00-0628.03

J.H. Dixon Jr PE 6/15/00

F	06-15-00	CHANGED COMPANY NAME
E	06-19-97	REVISED NOTES ON FASTENERS ON VIEWS "CONCRETE BLOCK FILLED JAMB" & " STEEL JAMB"
D	06-04-97	ADDED NOTE 12 GA. (0.105 IN.) MIN THICKNESS IN STEEL JAMB VIEW IS SUPPLIED BY OTHERS
C	03-03-97	24 GA. STEEL SPEC. REQUIRED
B	10-31-96	CHANGED FASTENER NOTES
A	10-24-96	ADDED LOAD CHART

MODEL 565-DCC

USDOOR & BUILDING COMPONENTS
2706 Rew Circle Suite 200 Ocoee, FL 34761
407.877.0100 Fax 407.877.8875 usdoor.com

JOB:
CONTRACTOR:
ARCHITECT:
ADDRESS:
DISTRIBUTOR:
ENGINEER: J.H. DIXON JR P.E. LIC No. FL7768

DATE: 09/03/96 SHEET: 1
DRAWN BY: WCK
CHECKED BY:
DRAWING NUMBER
R7020009

Sept. 03, 1996