MIAMI-DADE

MIAMI-DADE COUNTY, FLORIDA
METRO-DADE FLAGLER BUILDING

BUILDING CODE COMPLIANCE OFFICE
METRO-DADE FLAGLER BUILDING
140 WEST FLAGLER STREET, SUITE 1603
MIAMI, FLORIDA 33130-1563
(305) 375-2901 FAX (305) 375-2908

CONTRACTOR LICENSING SECTION
(305) 375-2527 FAX (305) 375-2558

CONTRACTOR ENFORCEMENT DIVISION
(305) 375-2966 FAX (305) 375-2908

PRODUCT CONTROL DIVISION
(305) 375-2902 FAX (305) 372-6339

PRODUCT CONTROL NOTICE OF ACCEPTANCE

The Hurricane Shutter Company
2633 West 76 Street
Hialeah ,FL 33016

Your application for Notice of Acceptance (NOA) of:
Extruded Aluminum Roll-Up Shutter
under Chapter 8 of the Code of Miami-Dade County governing the use of Alternate Materials and Types of Construction, and completely described herein, has been recommended for acceptance by the Miami-Dade County Building Code Compliance Office (BCCO) under the conditions specified herein.

This NOA shall not be valid after the expiration date stated below. BCCO reserves the right to secure this product or material at any time from a jobsite or manufacturer's plant for quality control testing. If this product or material fails to perform in the approved manner, BCCO may revoke, modify, or suspend the use of such product or material immediately. BCCO reserves the right to revoke this approval, if it is determined by BCCO that this product or material fails to meet the requirements of the South Florida Building Code.

The expense of such testing will be incurred by the manufacturer.

ACCEPTANCE NO.: 00-0628.13
EXPIRES: 07/03/2003

Raul Rodriguez
Chief Product Control Division

THIS IS THE COVERSHEET, SEE ADDITIONAL PAGES FOR SPECIFIC AND GENERAL CONDITIONS
BUILDING CODE & PRODUCT REVIEW COMMITTEE

This application for Product Approval has been reviewed by the BCCO and approved by the Building Code and Product Review Committee to be used in Miami-Dade County, Florida under the conditions set forth above.

Francisco J. Quintana, R.A.
Director
Miami-Dade County
Building Code Compliance Office

APPROVED: 08/17/2000

The Hurricane Shutter Co.

ACCEPTANCE NO: **00-0628.13**

APPROVED : AUG 1 7 2000

EXPIRES : **July 03, 2003**

NOTICE OF ACCEPTANCE: SPECIFIC CONDITIONS

1 SCOPE:

1.1 This renews the Notice of Acceptance No. 97-0109.02, which was issued on 07/03/97. It approves an extruded aluminum roll-up type shutter, as described in Section 2 of this Notice of Acceptance, designed to comply with the South Florida Building Code, (S.F.B.C.) 1994 Edition for Miami-Dade County. For the locations where the pressure requirements, as determined by S.F.B.C. Chapter 23, do not exceed the design pressure rating values indicated in the approved drawings.

2 PRODUCT DESCRIPTION:

2.1 The **Extruded Aluminum Roll-Up Shutter** and its components shall be constructed in strict compliance with the following documents: Drawing No. **96-390**, Sheets 1 through 10 of 10, titled "Roll-Up Shutter", prepared by Tilteco, Inc., dated 12/09/96, with latest revision on 05/20/97, signed and sealed by Walter A. Tillit Jr. PE. It bears the Miami-Dade County Product Control approval stamp with the Notice of Acceptance number and approval date. These documents shall herein after be referred to as the approved drawings.

3 LIMITATIONS:

3.1 All permanent set components, included but not limited to embedded anchor bolts, threaded cones, metal shields, headers and sills, must be protected against corrosion, contamination and damage at all times.

4 INSTALLATION:

4.1 The extruded aluminum roll-up shutter and its component shall be installed in strict compliance with the approved drawing

5 LABELING:

5.1 Each unit shall bear a permanent label with the manufacturer's name or logo, city, state and the following statement: "Miami-Dade County Product Control Approved"

6 BUILDING PERMIT REQUIREMENTS:

6.1 Application for Building Permit shall be accompanied by copies of the following:

- **6.1.1** This Notice of Acceptance
- **6.1.2** Duplicate copies of the approved drawings, as identified in Section 2 of this Notice of Acceptance, clearly marked to show the components selected for the proposed installation.
- **6.1.3** Any other document required by the Building Official or the South Florida Building Code in order to evaluate the installation of this system.

Manuel Perez

Manuel Perez, PE. Product Control Examiner
Product Control Division

The Hurricane Shutter Co.

ACCEPTANCE NO: 00-0628.13

APPROVED : AUG 1 7 2000

EXPIRES : July 03, 2003

NOTICE OF ACCEPTANCE: STANDARD CONDITIONS

1 Renewal of this Acceptance (approval) shall be considered after a renewal application has been filed and the original submitted documents, including test-supporting data, engineering documents, are no older than eight (8) years.

2. Any and all approved products shall be permanently labeled with the manufacturer's name, city, state, and the following statement: "Miami-Dade County Product Control Approval", or as specifically stated in the specific conditions of this Acceptance.

3. Renewals of Acceptance will not be considered if:
   a. There has been a change in the South Florida Building Code affecting the evaluation of this product and the product is not in compliance with the code changes.
   b. The product is no longer the same product (identical) as the one originally approved.
   c. If the Acceptance holder has not complied with all the requirements of this acceptance, including the correct installation of the product.
   d. The engineer who originally prepared, signed and sealed the required documentation initially submitted, is no longer practicing the engineering profession.

4. Any revision or change in the materials, use, and/or manufacture of the product or process shall automatically be cause for termination of this Acceptance, unless prior written approval has been requested (through the filing of a revision application with appropriate fee) and granted by this office.

5. Any of the following shall also be grounds for removal of this Acceptance:
   a. Unsatisfactory performance of this product or process.
   b. Misuse of this Acceptance as an endorsement of any product, for sales, advertising or any other purposes.

6. The Notice of Acceptance number preceded by the words Miami-Dade County, Florida, and followed by the expiration date may be displayed in advertising literature. If any portion of the Notice of Acceptance is displayed, then it shall be done in its entirety.

7. A copy of this Acceptance as well as approved drawings and other documents, where it applies, shall be provided to the user by the manufacturer or its distributors and shall be available for inspection at the job site at all time. The engineer need not reseal the copies.

8. Failure to comply with any section of this Acceptance shall be cause for termination and removal of Acceptance.

9. This Notice of Acceptance consists of pages 1, 2 and this last page 3.

Manuel Perez

Manuel Perez, PE., Product Control Examiner
Product Control Division

END OF THIS ACCEPTANCE

The Hurricane Shutter Co.

ACCEPTANCE NO: 00-0628.13

APPROVED : AUG 1 7 2000

EXPIRES : July 03, 2003

NOTICE OF ACCEPTANCE: EVIDENCE SUBMITTED:

A. DRAWING

1. Drawing No. 96-390, "Roll-Up Shutters", Sheets 1 through 10 of 10, prepared by Tilteco, Inc., dated 12/09/96, revised on 05/20/97, signed and sealed by Walter A. Tillit Jr., PE.

B. TEST

1. Test report on Uniform Static Air Pressure Test per PA 202, Large Missile Impact Test per PA 201 and Cyclic Loading Wind Pressure Test per PA 203 of Roll-Up Shutters with extruded aluminum slats prepared by Miami Testing Laboratory, Inc. Report No. MTL-16803, dated 10/16/96, signed and sealed by D. G. Ober, PE.

C. CALCULATIONS

1. Comparative analysis for slats; storm bars, headers and anchors using rational analysis dated 01/03/97, pages 1 through 33 of 33, prepared by Tilteco Inc., signed and sealed by W. A. Tillit Jr., PE.
2.

D. MATERIAL CERTIFICATION

1 Certification of Compliance prepared Eastern Metal Supply for Extruded Slat 6063-T6, with no date signed by J. J. Nacktshum.

2 Tensile Test Report No 257723 for sheet aluminum sample, prepared by Center For Applied Engineering, Inc. dated 07/16/96, signed and sealed by J. M. Bridenstine, PE.

E. STATEMENTS

1. Engineering active letter issued by Tilteco Inc. on 05/24/2000, signed and sealed by W. A. Tillit Jr. PE.
2. No change letter issued by The Hurricane Shutter Co. on 06/14/2000, signed by M. Shellenberger.
3. No financial interest letter issued by Tilteco, Inc. on 01/03/97, signed and sealed by W. A. Tillit, PE.

Manuel Perez, PE, Product Control Examiner
Product Control Division

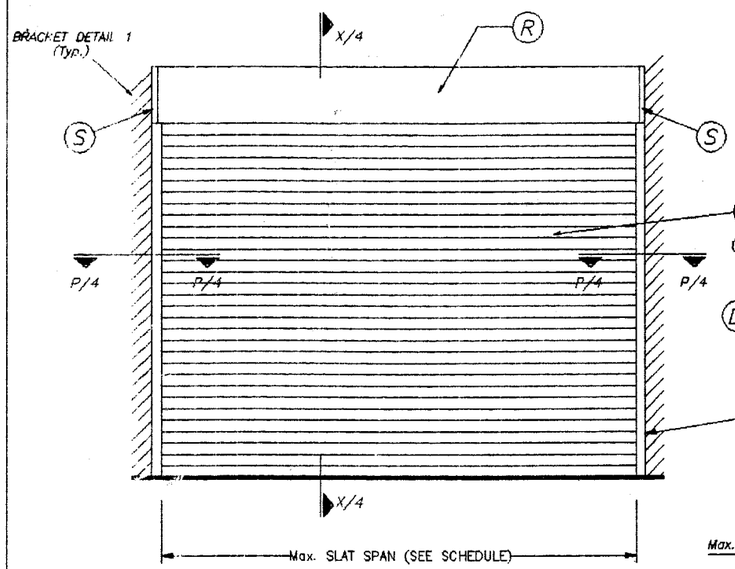

TYPICAL SINGLE UNIT ELEVATION (NO STORM BARS REQUIRED)

NOTE: SEE SHEET 2 & 3 OF 10 FOR COMPONENTS NOMENCLATURE.

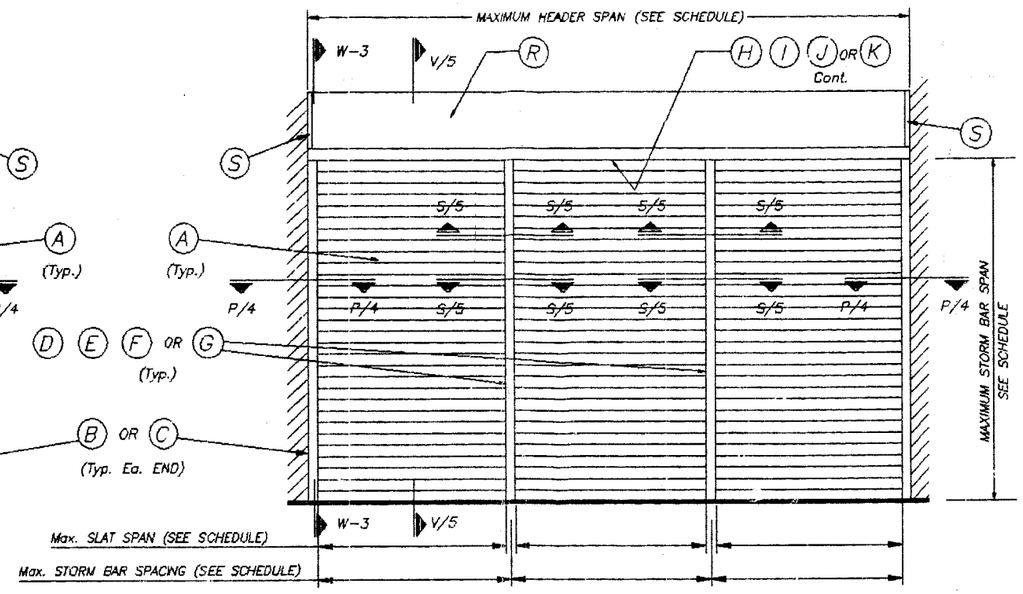

TYPICAL MULTIPLE UNIT ELEVATION (STORM BARS REQUIRED)

NOTE: SEE SHEET 2 & 3 OF 10 FOR COMPONENTS NOMENCLATURE.

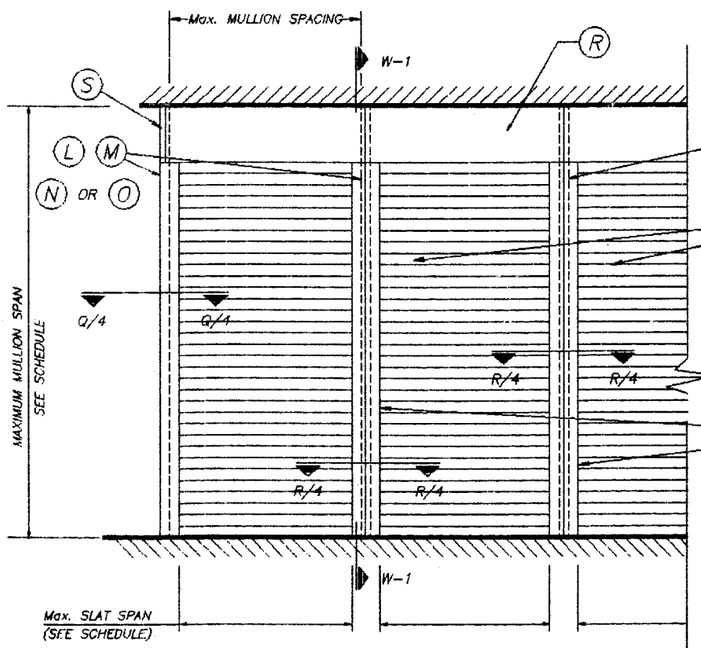

TYPICAL CONSECUTIVE SINGLE UNIT ELEVATION (NO STORM BARS REQUIRED)

NOTE: SEE SHEET 2 & 3 OF 10 FOR COMPONENTS NOMENCLATURE.

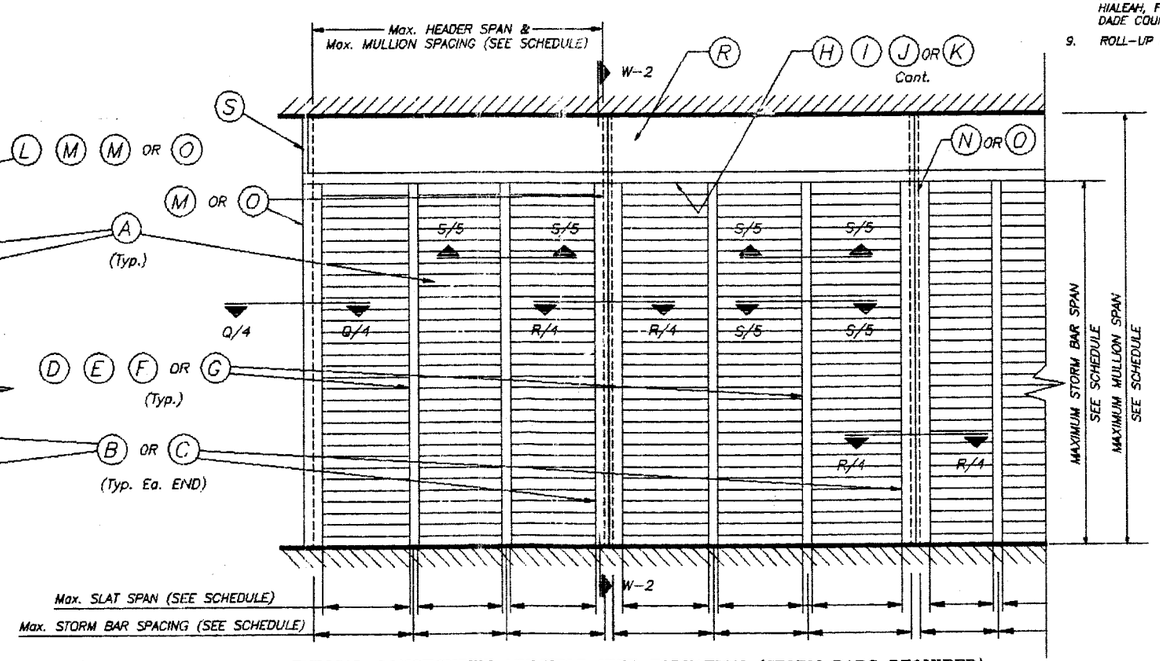

TYPICAL CONSECUTIVE MULTIPLE UNIT ELEVATION (STORM BARS REQUIRED)

NOTE: SEE SHEET 2 & 3 OF 10 FOR COMPONENTS NOMENCLATURE.

GENERAL NOTES:

1. ROLL-UP SHUTTER HAS BEEN DESIGNED IN ACCORDANCE WITH THE DADE COUNTY, 1994 EDITION OF THE SOUTH FLORIDA BUILDING CODE. DESIGN WIND LOADS SHALL BE DETERMINED AS PER SECTION 6 OF ASCE 7-88, WITH 110 m.p.h. BASIC WIND SPEED.
2. ALL ALUMINUM EXTRUSIONS SHALL BE 6063-T6 ALLOY (UNLESS OTHERWISE NOTED).
3. ALL SCREWS TO BE STAINLESS STEEL 304 OR 316 SERIES W/50 ksi YIELD POINT AND 90 ksi TENSILE STRENGTH.
4. BOLTS TO BE 2024-T4 ALUMINUM ALLOY, GALVANIZED OR STAINLESS STEEL WITH 36 ksi MINIMUM YIELD POINT.
5. STORM BARS SHALL REMAIN IN PLACE AT ALL TIMES.
6. ANCHORS TO WALL SHALL BE AS FOLLOWS: (UNLESS OTHERWISE NOTED)
   (A) TO EXISTING POURED CONCRETE:
   - 1/4" ø TAPCON ANCHORS AS MANUFACTURED BY I.T.W./RAMSET OR ELCO INDUSTRIES.

   NOTES:
   A.1) MINIMUM EMBEDMENT OF CONCRETE ANCHORS INTO THE CONCRETE UNIT SHALL BE 1 3/4". NO EMBEDMENT INTO STUCCO SHALL BE CONSIDERED AS PART OF THE REQUIRED EMBEDMENT.
   A.2) IN CASE THAT PRECAST STONE, PRECAST CONCRETE PANELS, OR PAVERS BE FOUND ON THE EXISTING WALL OR FLOOR, ANCHORS SHALL BE LONG ENOUGH TO REACH THE MAIN STRUCTURE BEHIND SUCH PANELS. MINIMUN PENETRATION SHALL BE 1 3/4".

   (B) TO EXISTING CONCRETE BLOCK WALL:
   - 1/4" ø TAPCON ANCHORS, AS MANUFACTURED BY I.T.W./RAMSET OR ELCO INDUSTRIES.

   NOTES:
   B.1) MINIMUM EMBEDMENT OF TAPCON ANCHORS, INTO THE CONCRETE BLOCK UNIT SHALL BE 1 1/4".
   B.2) IN CASE THAT PRECAST STONE OR PRECAST CONCRETE PANELS BE FOUND ON THE EXISTING WALL, ANCHORS SHALL BE LONG ENOUGH TO REACH THE MAIN STRUCTURE BEHIND SUCH PANELS. ANCHORAGE SHALL BE 1 1/4" MINIMUN.

   (C) ANCHORS SHALL BE INSTALLED FOLLOWING ALL OF THE RECOMENDATIONS AND SPECIFICATIONS OF THE ANCHOR'S MANUFACTURER.
   (D) ANCHORAGE TO WOOD FRAME BUILDINGS NOT COVERED IN THIS DRAWING SHALL BE ENGINEERED ON A JOB BY JOB BASIS.
7. IT SHALL BE THE RESPONSIBILITY OF THE CONTRACTOR TO VERIFY THE SOUNDNESS OF THE STRUCTURE WHERE SHUTTER IS TO BE ATTACHED TO INSURE PROPER ANCHORAGE.
8. SHUTTER MANUFACTURER'S STAMP SHALL BE PLACED ON THE EXPOSED SURFACE OF THE SIDE RAIL APROXIMATELY 4" ABOVE THE BOTTOM OF SUCH RAIL.
   STAMP SHALL READ AS FOLLOWS:
   ROLL-UP SHUTTER
   THE HURRICANE SHUTTER CO.
   HIALEAH, FLORIDA
   DADE COUNTY PRODUCT CONTROL APPROVED.
9. ROLL-UP MECHANISM NOT PART OF THIS APPROVAL.

PRODUCT RENEWED

ACCEPTANCE No. 00-0628.13

EXPIRATION DATE 07/03/2003

By Manuel Perez

PRODUCT CONTROL DIVISION
BUILDING CODE COMPLIANCE OFFICE

APPROVED AS COMPLYING WITH THE SOUTH FLORIDA BUILDING CODE

DATE JULY 03 1997

BY Manuel Perez

PRODUCT CONTROL DIVISION
BUILDING CODE COMPLIANCE OFFICE

ACCEPTANCE NO. 97-0109.02

DADE COUNTY

TILTECO INC.
TILLIT TESTING & ENGINEERING COMPANY
6595 N.W. 36th. St., Ste. 217, VIRGINIA GARDENS, Fl. 33166
Phone : (305)871-1530 . Fax : (305)871-1531

WALTER A. TILLIT Jr., P. E.
FLORIDA Lic. # 44167

ROLL-UP SHUTTER

THE HURRICANE SHUTTER CO.
2631 WEST 76 ST.
HIALEAH, FLORIDA 33016

REV. No	DESCRIPTION	DATE	REV. No	DESCRIPTION	DATE
1	-	-	3		
2	-	-	4		

N. T. S.
SCALE

12/9/96
DATE

96 - 390
DRAWING No

SHEET 1 OF 10

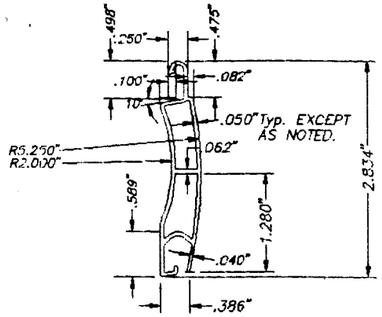

(A) TYPE 1 SLAT:
EXTRUDED ALUMINUM SLAT (DIE DRAWING N° 44189)
6063-T6 ALUMINUM ALLOY
SCALE: 1/2" = 1"

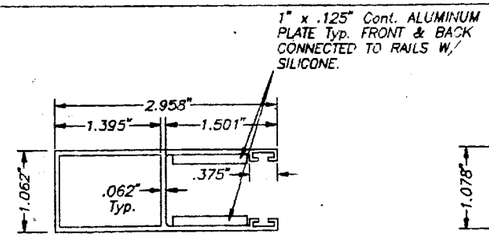

(B) TYPE 1 SIDE RAIL:
6063-T6 Alum. ALLOY
SCALE: 1/2" = 1"

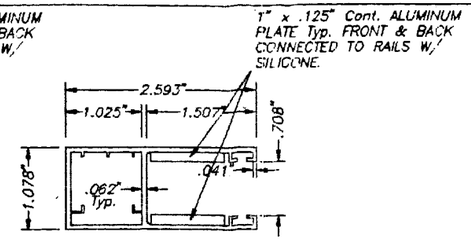

(C) TYPE 2 SIDE RAIL:
6063-T6 Alum. ALLOY
SCALE: 1/2" = 1"

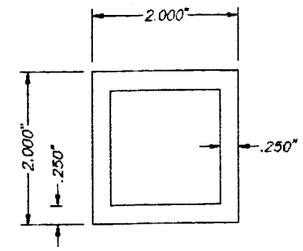

(D) TYPE 1 STORM BAR:
2" EXTRUDED STORM BAR
6063-T6 ALUMINUM ALLOY
SCALE: 1/2" = 1"

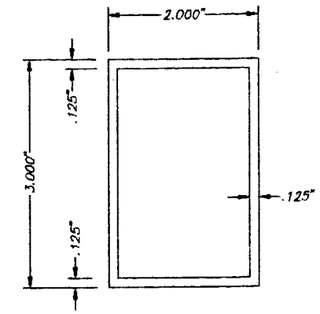

(E) TYPE 2 STORM BAR:
3" EXTRUDED STORM BAR
6063-T6 ALUMINUM ALLOY
SCALE: 1/2" = 1"

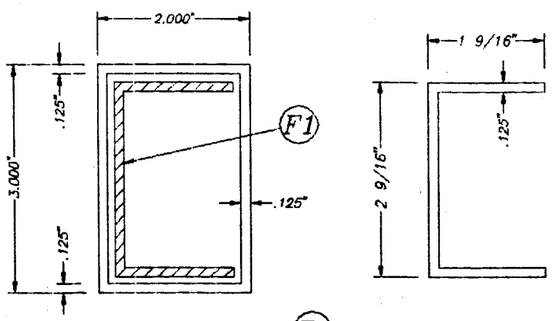

(F1) 1 9/16" x 2 9/16" x .125"
ZINC PLATED STEEL INSERT
ASTM A-36 DESIGNATION
SCALE: 1/2" = 1"

(F) TYPE 3 STORM BAR:
3" EXTRUDED STORM BAR
W/ (F1)
6063-T6 ALUMINUM ALLOY
SCALE: 1/2" = 1"

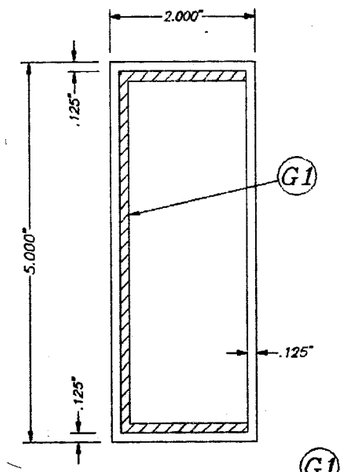

(G) TYPE 4 STORM BAR:
5" EXTRUDED STORM BAR
W/ (G1)
6063-T6 ALUMINUM ALLOY
SCALE: 1/2" = 1"

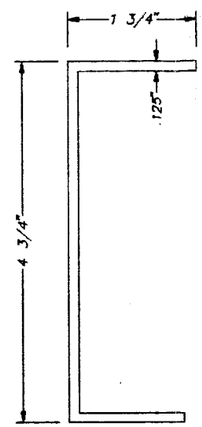

(G1) 1 3/4" x 4 3/4" x .125"
ZINC PLATED STEEL INSERT
ASTM A-36 DESIGNATION
SCALE: 1/2" = 1"

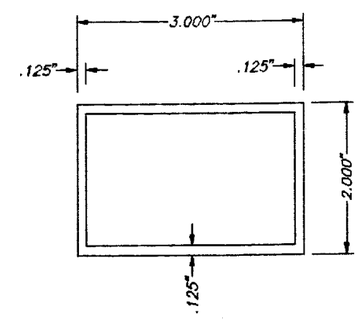

(H) TYPE 1 HEADER:
6063-T6 ALUMINUM ALLOY
SCALE: 1/2" = 1"

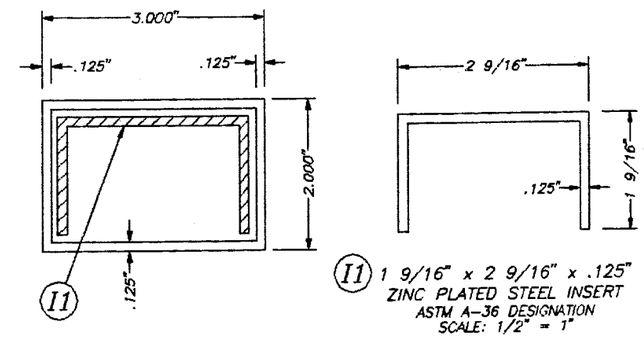

(I1) 1 9/16" x 2 9/16" x .125"
ZINC PLATED STEEL INSERT
ASTM A-36 DESIGNATION
SCALE: 1/2" = 1"

(I) TYPE 2 HEADER:
3" EXTRUDED HEADER
W/ (I1)
6063-T6 ALUMINUM ALLOY
SCALE: 1/2" = 1"

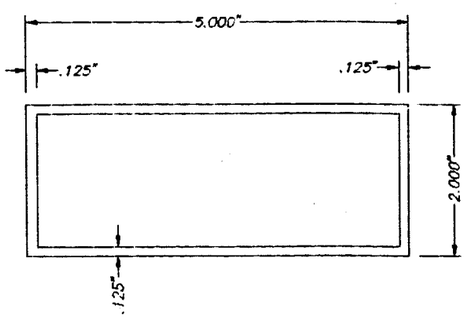

(J) TYPE 3 HEADER:
5" EXTRUDED HEADER
6063-T6 ALUMINUM ALLOY
SCALE: 1/2" = 1"

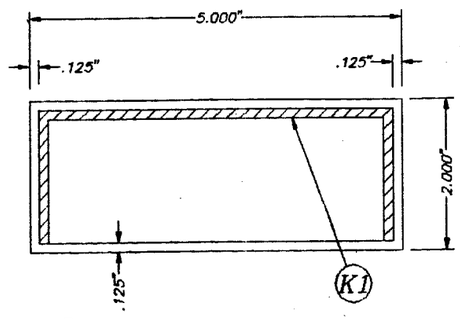

(K) TYPE 4 HEADER:
5" EXTRUDED HEADER
W/ (K1)
6063-T6 ALUMINUM ALLOY
SCALE: 1/2" = 1"

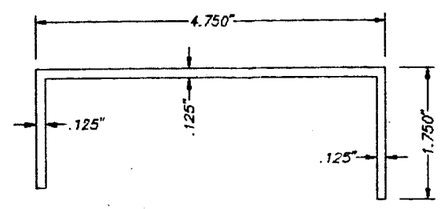

(K1) 1 3/4" x 4 3/4" x .125"
ZINC PLATED STEEL INSERT
ASTM A-36 DESIGNATION
SCALE: 1/2" = 1"

PRODUCT RENEWED
ACCEPTANCE No. 00-0628.13
EXPIRATION DATE 07/03/2003
By Manuel Perez
PRODUCT CONTROL DIVISION
BUILDING CODE COMPLIANCE OFFICE

APPROVED AS COMPLYING WITH THE SOUTH FLORIDA BUILDING CODE
DATE JULY 03 1997
BY Manuel Perez
PRODUCT CONTROL DIVISION
BUILDING CODE COMPLIANCE OFFICE
ACCEPTANCE NO. 97-0109.02

DADE COUNTY

TILTECO INC.
TILLIT TESTING & ENGINEERING COMPANY
6595 N.W. 36th St. Ste 217, VIRGINIA GARDENS, Fl. 33166
Phone : (305)871-1530 . Fax . (305)871-1531
WALTER A. TILLIT Jr., P. E.
FLORIDA Lic. # 44187

ROLL-UP SHUTTER

THE HURRICANE SHUTTER CO.
2631 WEST 76 ST.
HIALEAH, FLORIDA 33016

REV. No	DESCRIPTION	DATE	REV. No	DESCRIPTION	DATE
1	GENERAL	5/20/97	3		
2	-	-	4		

AS SHOWN SCALE
12/9/96 DATE
96 - 390 DRAWING No
SHEET 2 OF 10

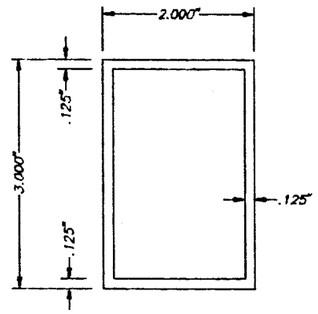

(L) TYPE 1 MULLION:
3" EXTRUDED MULLION
6063-T6 ALUMINUM ALLOY
SCALE: 1/2" = 1"

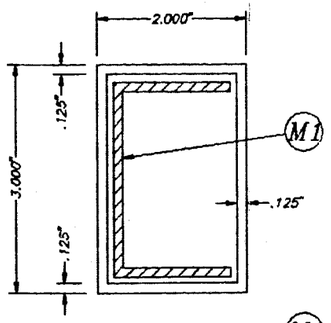

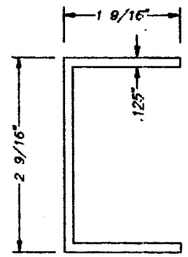

(M1) 1 9/16" x 2 9/16" x .125"
ZINC PLATED STEEL INSERT
ASTM A-36 DESIGNATION
SCALE: 1/2" = 1"

(M) TYPE 2 MULLION:
3" EXTRUDED MULLION
W/ (M1)
6063-T6 ALUMINUM ALLOY
SCALE: 1/2" = 1"

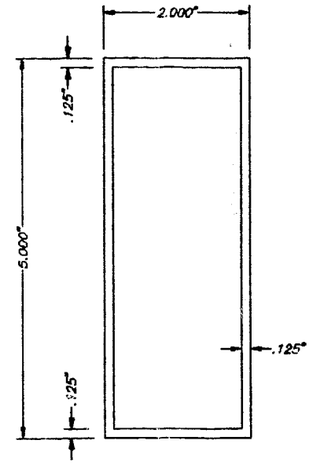

(N) TYPE 3 MULLION:
5" EXTRUDED MULLION
6063-T6 ALUMINUM ALLOY
SCALE: 1/2" = 1"

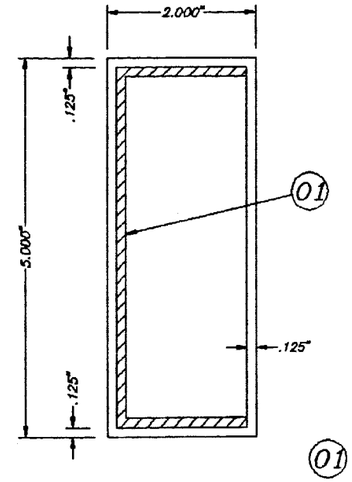

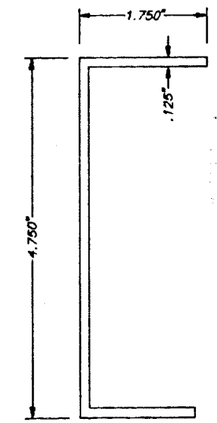

(01) 1 3/4" x 4 3/4" x .125"
ZINC PLATED STEEL INSERT
ASTM A-36 DESIGNATION
SCALE: 1/2" = 1"

(O) TYPE 4 MULLION:
5" EXTRUDED MULLION
W/ (01)
6063-T6 ALUMINUM ALLOY
SCALE: 1/2" = 1"

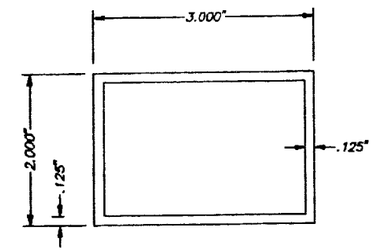

(P) TYPE 1
BUILD-OUT TUBE:
3" x 2" EXTRUDED TUBE
6063-T6 ALUMINUM ALLOY

PRODUCT RENEWED

ACCEPTANCE No. 00-0628.13
EXPIRATION DATE 07/03/2003
By Manuel Perez
PRODUCT CONTROL DIVISION
BUILDING CODE COMPLIANCE OFFICE

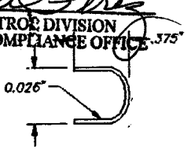

(T) ZINC PLATED STEEL
INSERT FOR SLATS.
ASTM A-36 DESIGNATION
W/ G-90 GALVANIZED
SCALE: 1" = 1"

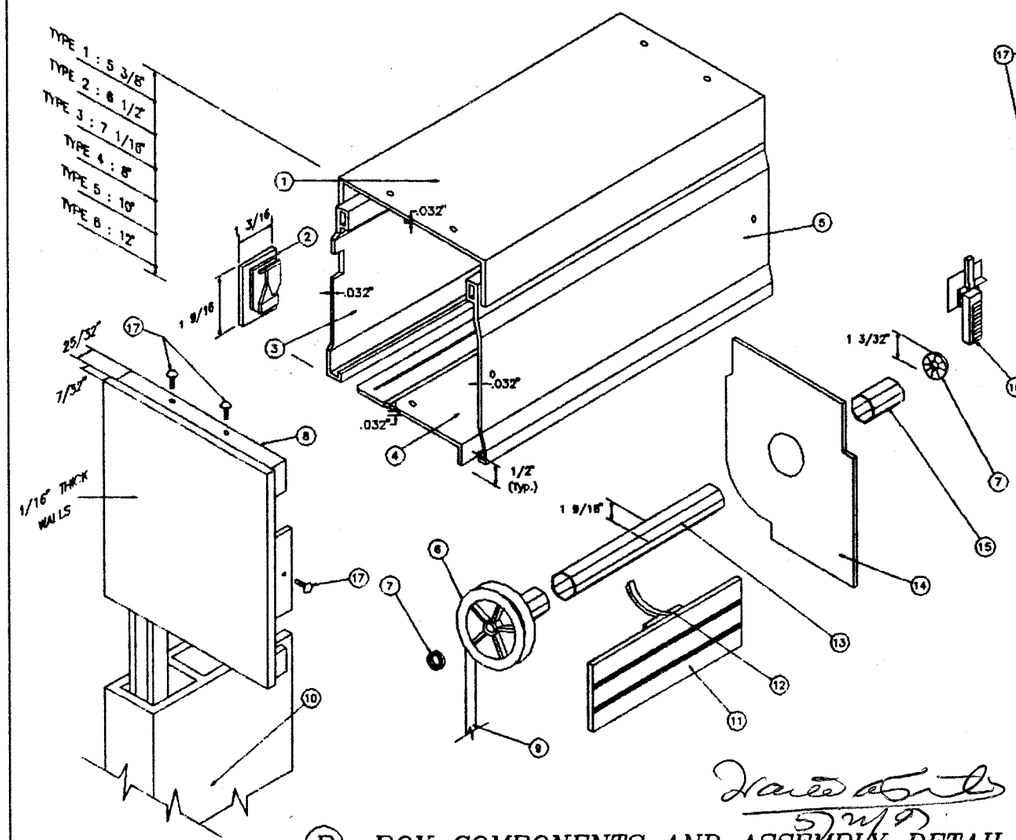

(R) BOX COMPONENTS AND ASSEMBLY DETAIL

1. TOP PROFILE 3005-H28 ALLOY.
2. BOTTOM LEADER W/FLUSH.
3. REAR PROFILE 3005-H28 ALLOY.
4. BOTTOM PROFILE 3005-H28 ALLOY.
5. COVER PROFILE 3005-H28 ALLOY.
6. NYLON DISK: 4 1/4" O. D.
7. ROLLING CUSHION W/BALLS.
8. BOX SIDE BRACKET: CAST ALUMINUM.
9. RIBBON: 17/32" WIDE.
10. SIDE RAIL.
11. SLAT.
12. EXTRUDED ALUMINUM DRAWING HOOP.
13. GALVANIZED STEEL DRUM: 1 9/16" O. D. x 0.032" Thk.
14. RETAINING METAL PLATE: 26 Ga. Galv. Stl. AT EACH END.
15. NYLON FERRULE: 1 17/32" O. D. x 0.045" Thk. x 3 5/16" Long.
16. NYLON FUNNEL.
17. SCREWS: # 4 x 1/2" S. S.

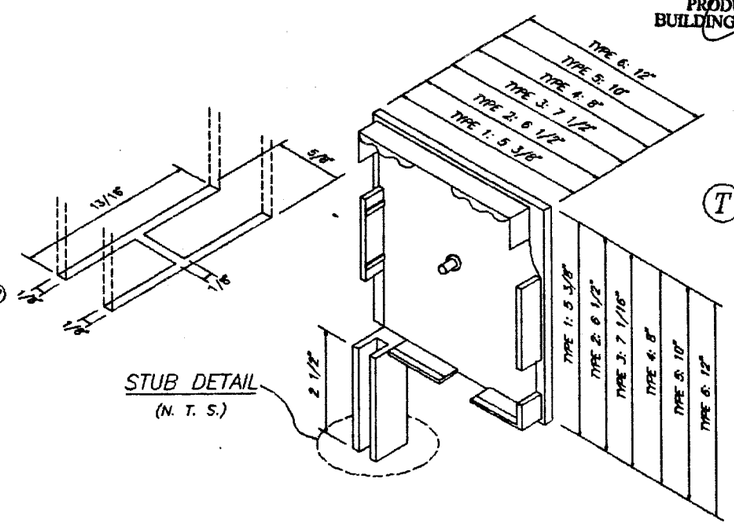

(S) BOX SIDE BRACKET TYPES

APPROVED AS COMPLYING WITH THE SOUTH FLORIDA BUILDING CODE
DATE JULY 03 1997
BY Manuel Perez
PRODUCT CONTROL DIVISION
BUILDING CODE COMPLIANCE OFFICE
ACCEPTANCE NO. 97-0109.02

DADE COUNTY

TILTECO INC.
TILLIT TESTING & ENGINEERING COMPANY
6515 N.W. 36th. St., Ste. 217, VIRGINIA GARDENS, Fl. 33166
Phone : (305)871-1530 . Fax : (305)871-1531

WALTER A. TILLIT Jr., P. E.
FLORIDA Lic. # 44167

ROLL-UP SHUTTER

THE HURRICANE SHUTTER CO.
2631 WEST 76 ST.
HIALEAH, FLORIDA 33016

REV. No	DESCRIPTION	DATE	REV. No	DESCRIPTION	DATE
1	–	–	3		
2	–	–	4		

AS SHOWN
SCALE

12/9/96
DATE

96 – 390
DRAWING No

SHEET 3 OF 10

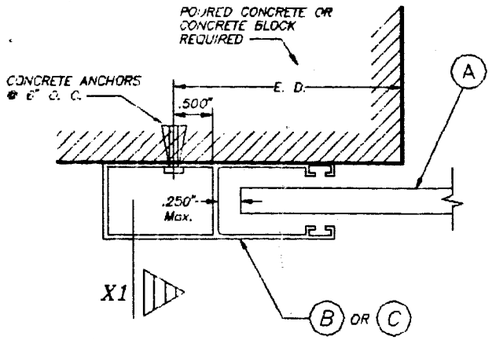

SECTION P – P (1) : WALL MOUNT

SCALE: FULL

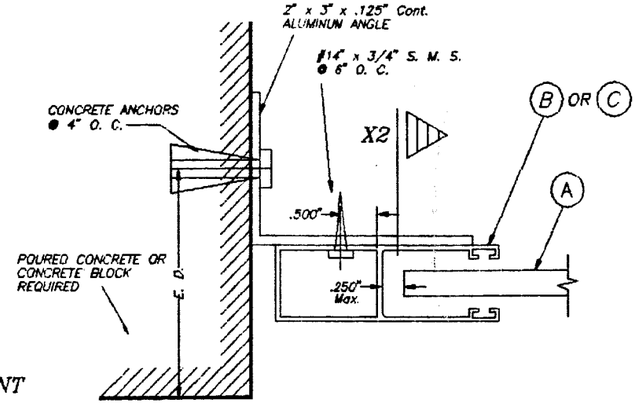

SECTION P – P (2) : SIDE WALL MOUNT

SCALE: 1/2" = 1"

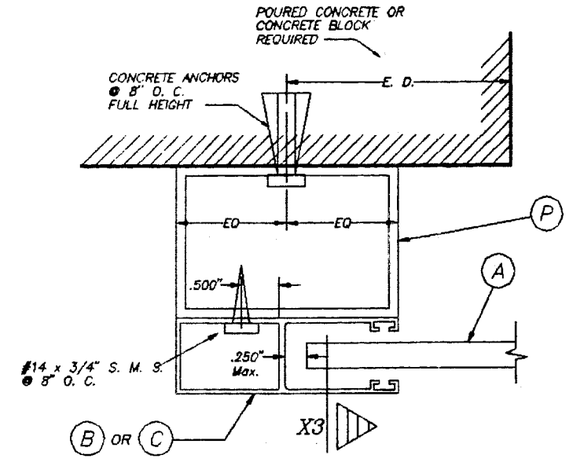

SECTION P – P (3) : BUILD-OUT

SCALE: 1/2" = 1"

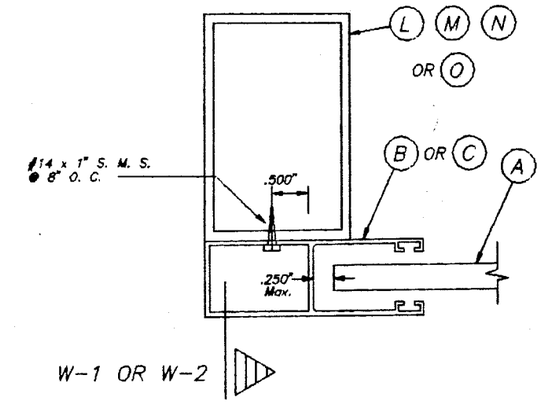

SECTION Q – Q : MULLION MOUNT

SCALE: 1/2" = 1"

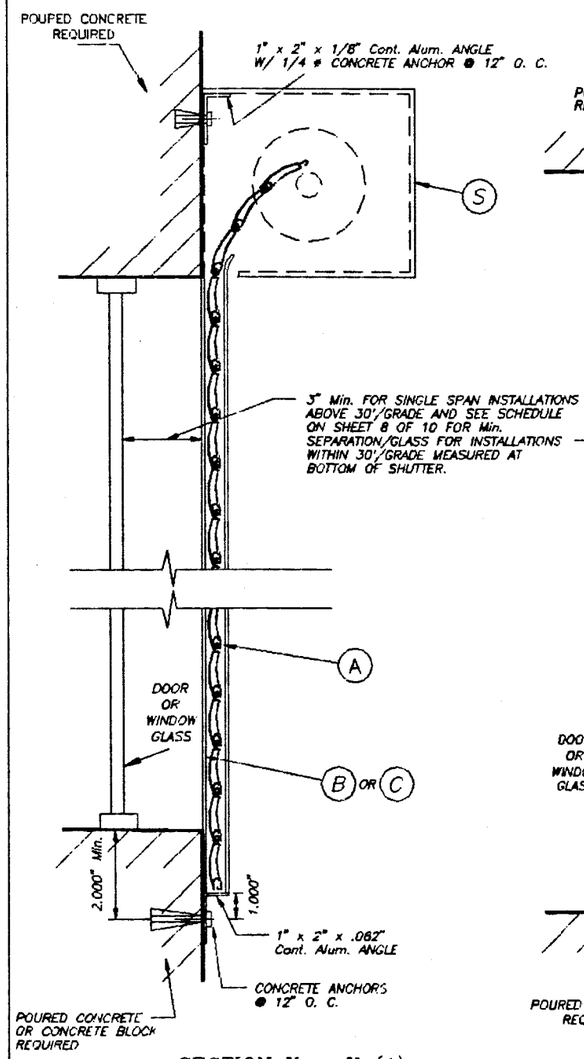

SECTION X – X (1)

N. T. S.

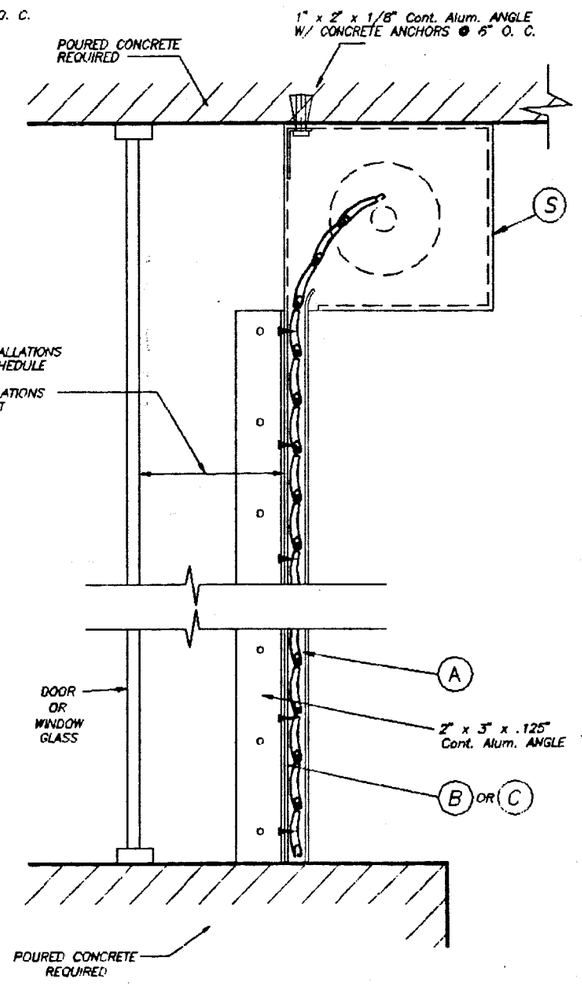

SECTION X –X (2)

N. T. S.

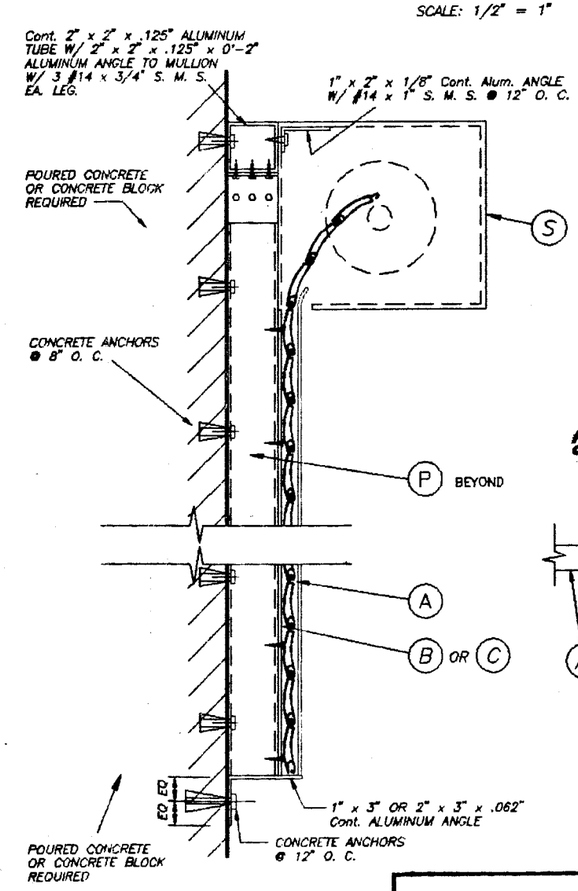

SECTION X – X (3)

N. T. S.

PRODUCT RENEWED

ACCEPTANCE No. 00-0628.13

EXPIRATION DATE 07/03/2003

By Manuel Perez

PRODUCT CONTROL DIVISION
BUILDING CODE COMPLIANCE OFFICE

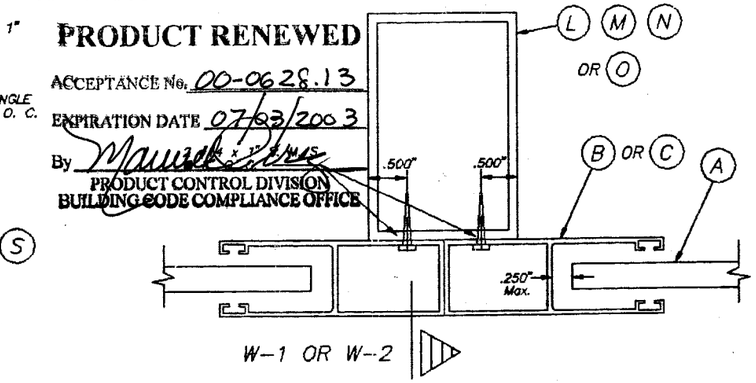

SECTION R – R : MULLION MOUNT (FRONT)

SCALE: 1/2" = 1"

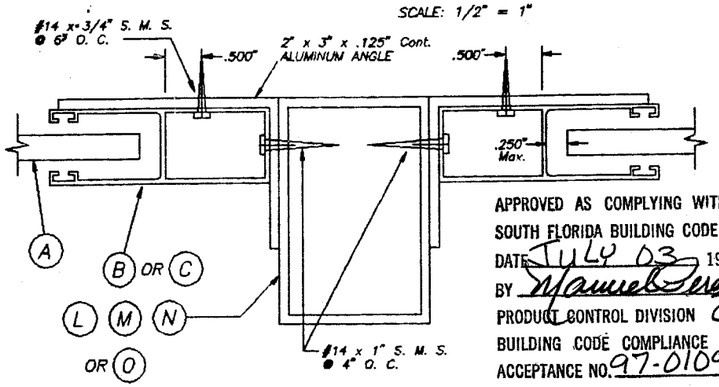

SECTION R – R : MULLION MOUNT (SIDE)

SCALE: 1/2" = 1"

APPROVED AS COMPLYING WITH THE SOUTH FLORIDA BUILDING CODE

DATE JULY 03 1997

BY Manuel Perez

PRODUCT CONTROL DIVISION

BUILDING CODE COMPLIANCE OFFICE

ACCEPTANCE NO. 97-0109.02

DADE COUNTY

5/29/97

TILTECO INC.

TILLIT TESTING & ENGINEERING COMPANY
8595 N.W. 36th. St., Ste. 217, VIRGINIA GARDENS, Fl. 33166
Phone : (305)871-1530 . Fax : (305)871-1531

WALTER A. TILLIT Jr., P. E.
FLORIDA Lic. # 44167

ROLL-UP SHUTTER

THE HURRICANE SHUTTER CO.
2631 WEST 76 ST.
HIALEAH, FLORIDA 33016

REV. No	DESCRIPTION	DATE	REV. No	DESCRIPTION	DATE
1	–	–	3		
2	–	–	4		

AS SHOWN SCALE

12/9/96 DATE

96 – 390 DRAWING No

SHEET 4 OF 10

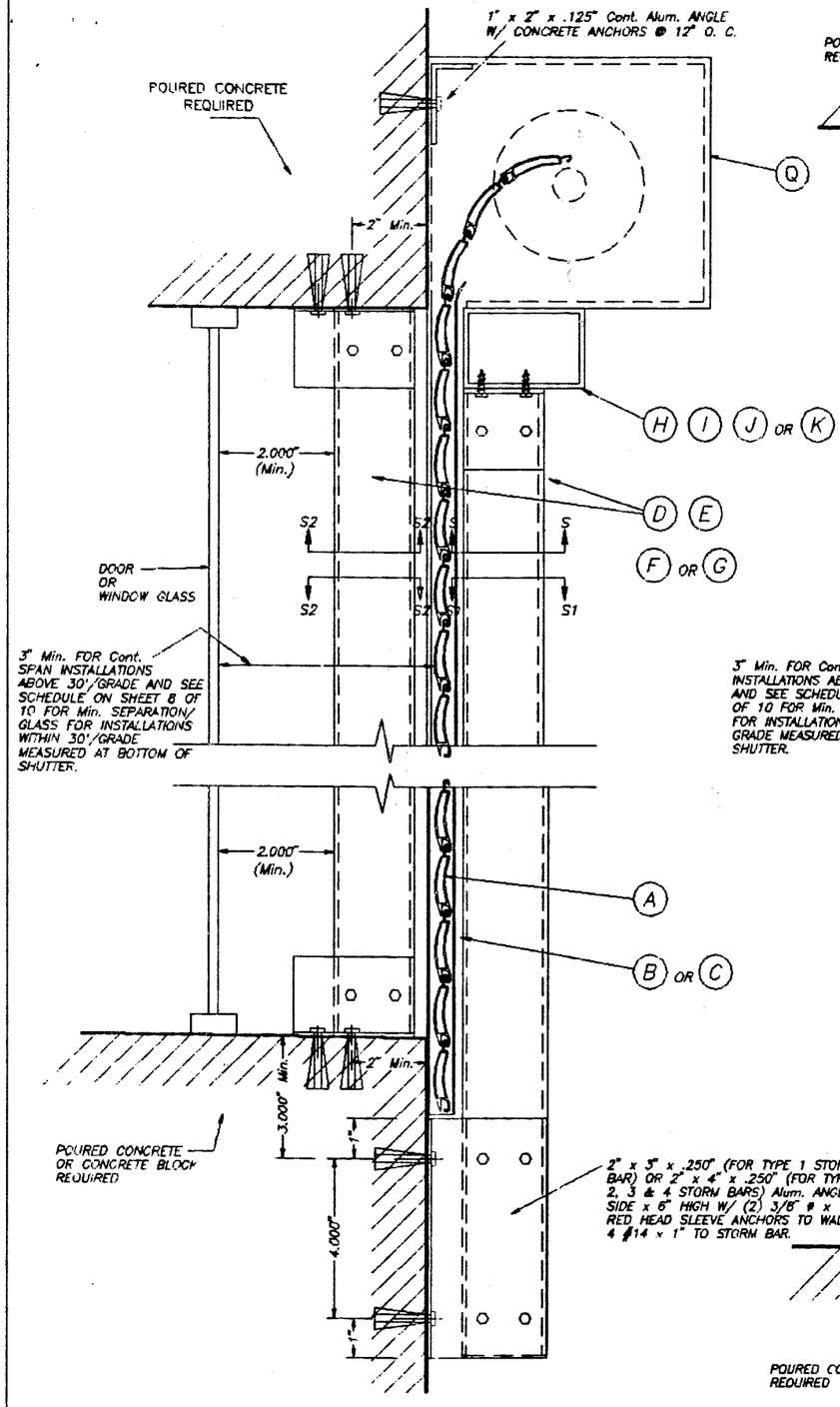

WALL MOUNTING : SECTION V – V (1)

N. T. S.

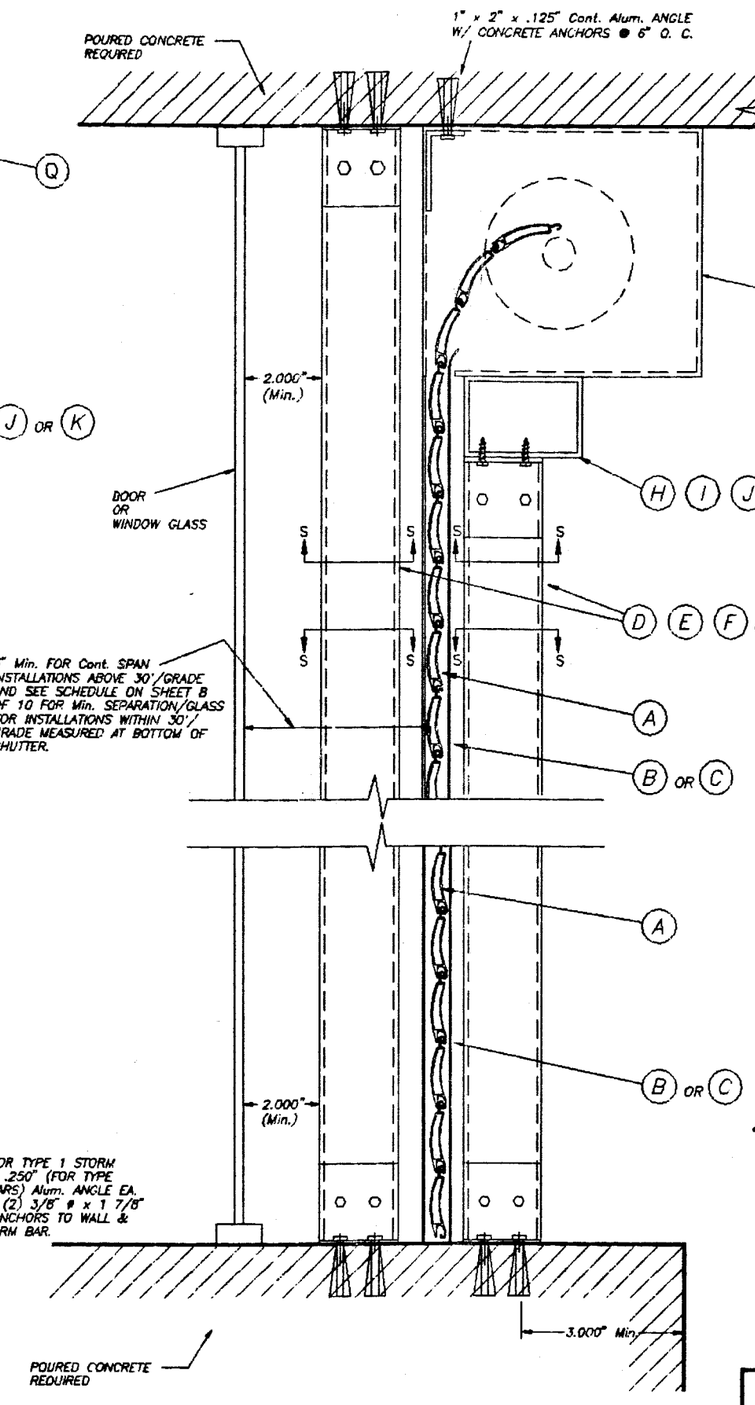

CEILING & FLOOR MOUNTING :

SECTION V – V (2)

N. T. S.

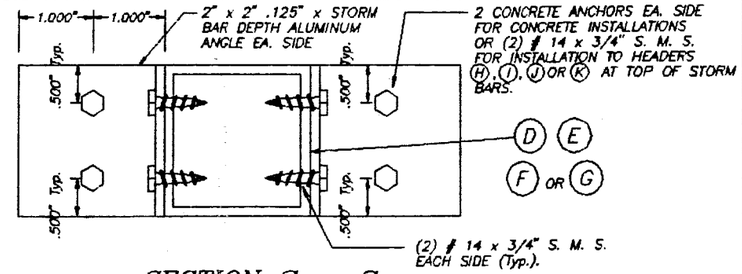

SECTION S – S

SCALE : 1/2" = 1"

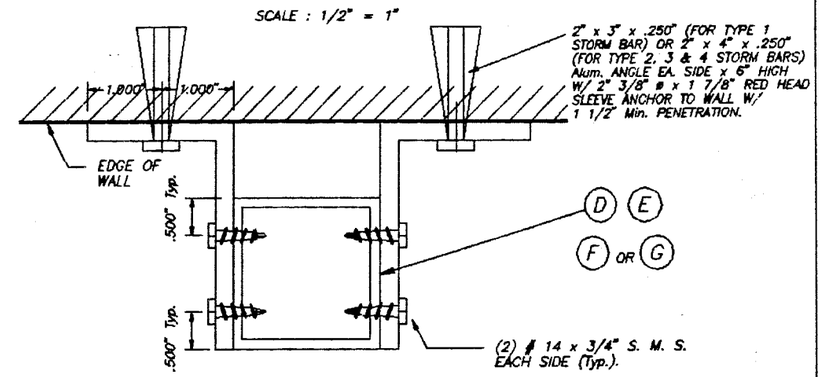

SECTION S1 – S1

SCALE : 1/2" = 1"

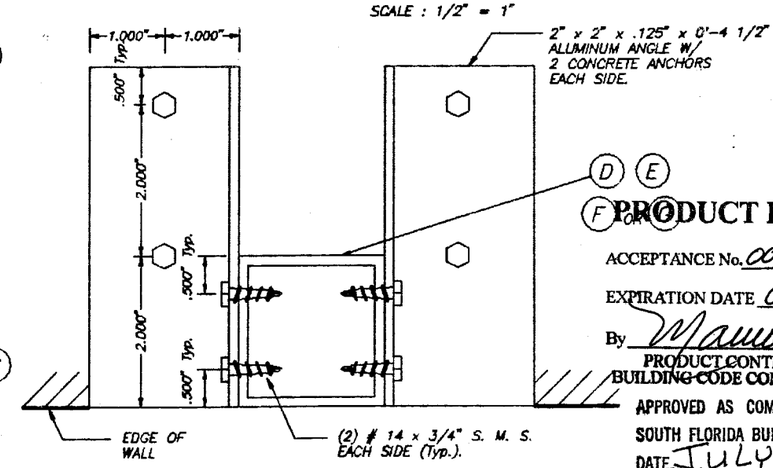

SECTION S2 – S2

SCALE : 1/2" = 1"

PRODUCT RENEWED

ACCEPTANCE No. 00-0628.13

EXPIRATION DATE 07/03/2003

By Manuel Perez

PRODUCT CONTROL DIVISION

BUILDING CODE COMPLIANCE OFFICE

APPROVED AS COMPLYING WITH THE SOUTH FLORIDA BUILDING CODE

DATE JULY 03 1997

BY Manuel Perez

PRODUCT CONTROL DIVISION

BUILDING CODE COMPLIANCE OFFICE

ACCEPTANCE NO. 97-0109.02

DADE COUNTY

TILTECO INC.

TILLIT TESTING & ENGINEERING COMPANY

6585 N.W. 36th St., Ste. 217, VIRGINIA GARDENS, FL 33166

Phone : (305)871-1530 . Fax : (305)871-1531

WALTER A. TILLIT Jr., P. E.

FLORIDA Lic. # 44167

Walter A. Tillit Jr. 5/29/97

ROLL-UP SHUTTER

THE HURRICANE SHUTTER CO.

2631 WEST 76 ST.

HIALEAH, FLORIDA 33016

REV. No	DESCRIPTION	DATE	REV. No	DESCRIPTION	DATE
1	–	–	3		
2	–	–	4		

AS SHOWN SCALE

12/9/96 DATE

96 – 390 DRAWING No

SHEET 5 OF 10

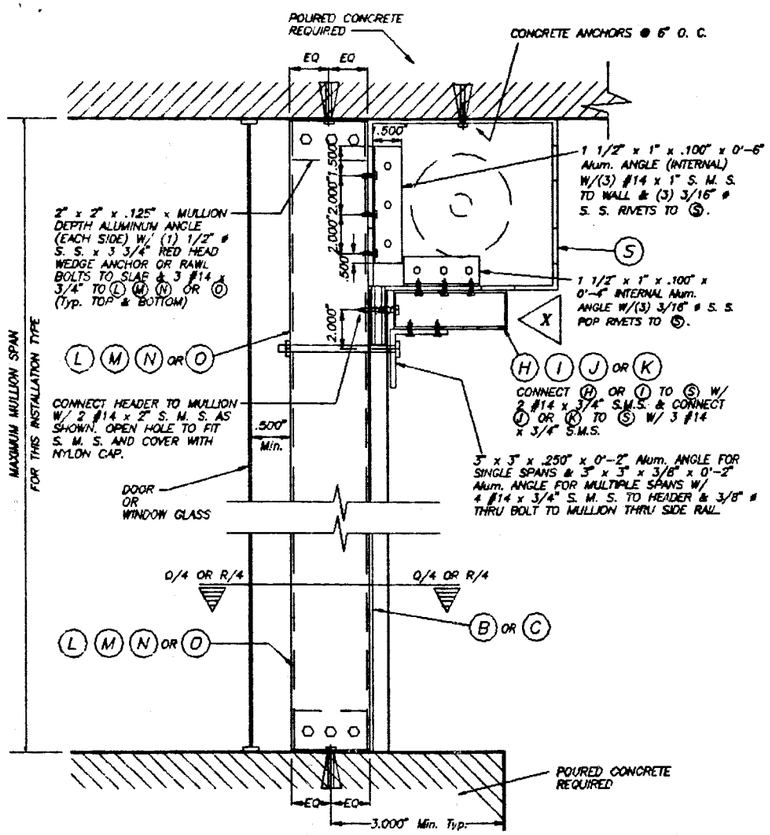

FLOOR/CEILING MOUNTING :

SECTION W – W (1) & W – W (2)

SCALE : 1/8" = 1"

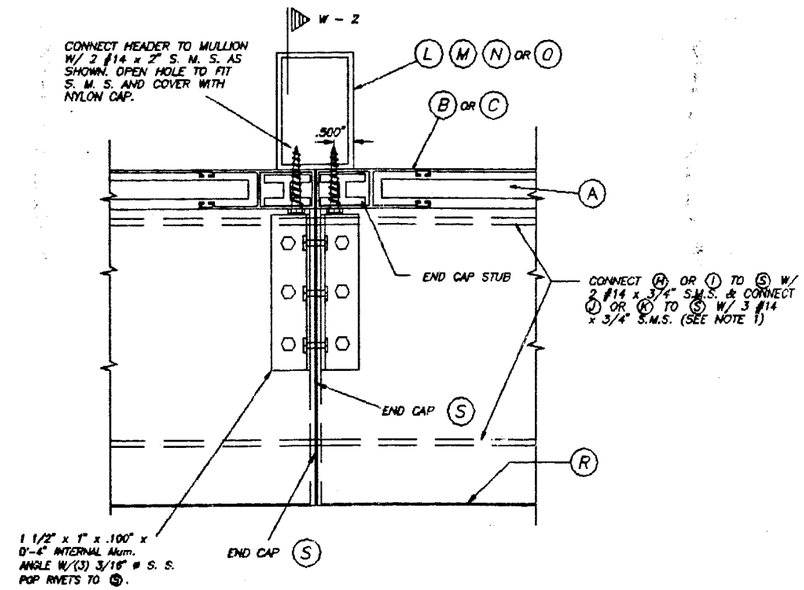

PLAN 1

SCALE : 1/4" = 1"

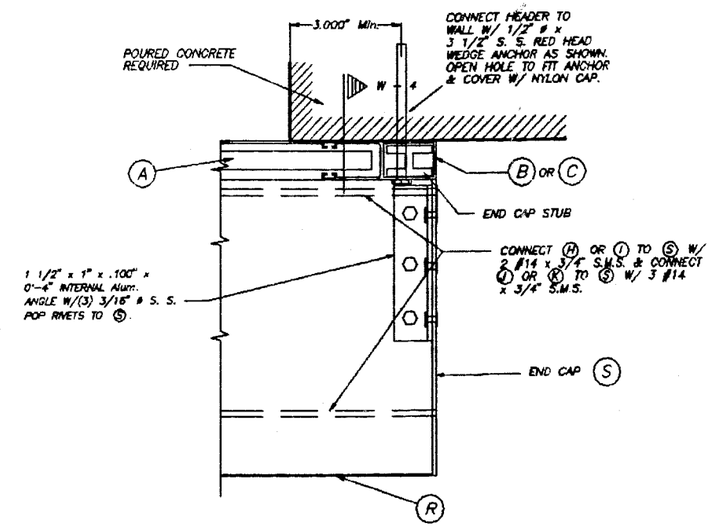

PLAN 2

SCALE : 1/4" = 1"

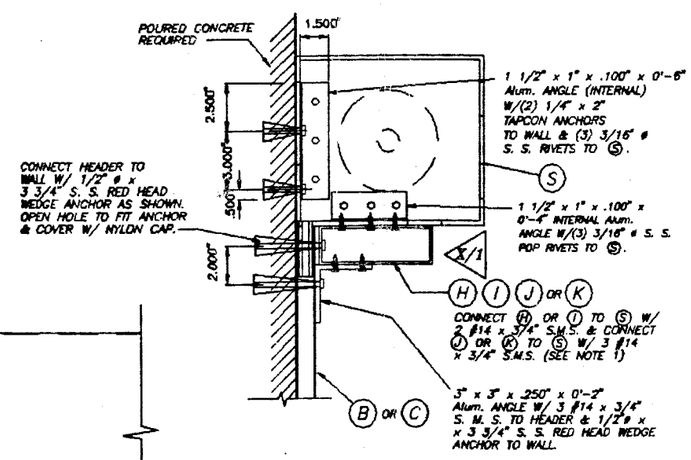

WALL MOUNTING :

SECTION W – W (3)

SCALE : 1/8" = 1"

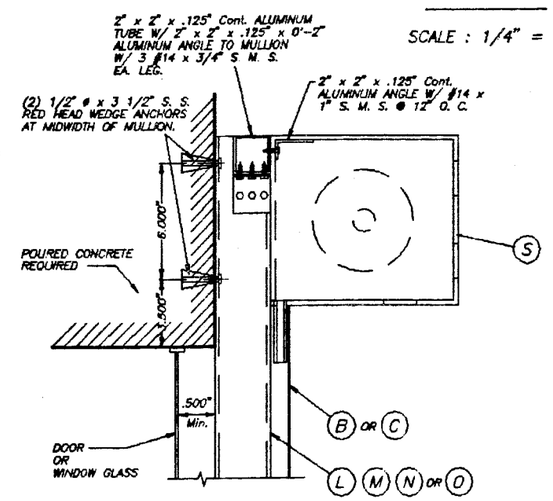

WALL MOUNTING AT TOP

SCALE : 1/8" = 1"

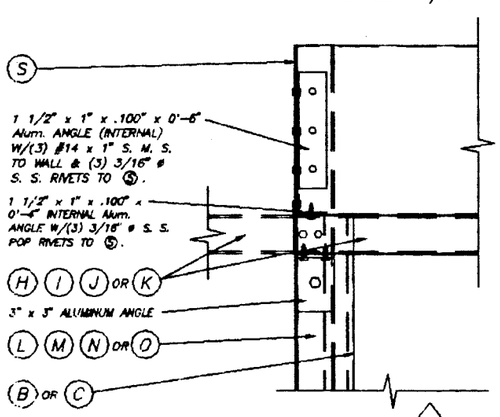

ELEVATION X

SCALE : 1/8" = 1"

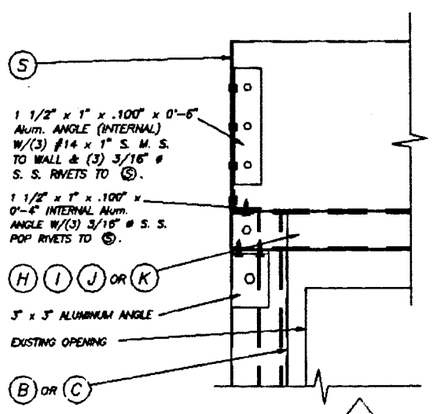

ELEVATION X1

SCALE : 1/8" = 1"

5/29/97

PRODUCT RENEWED

ACCEPTANCE No. 00-0628.13

EXPIRATION DATE 07/03/2003

By [signature]

PRODUCT CONTROL DIVISION
BUILDING CODE COMPLIANCE OFFICE

APPROVED AS COMPLYING WITH THE SOUTH FLORIDA BUILDING CODE

DATE JULY 03 1997

BY [signature]

PRODUCT CONTROL DIVISION
BUILDING CODE COMPLIANCE OFFICE

ACCEPTANCE NO. 97-0109.02

DADE COUNTY

TILTECO INC.
TILLIT TESTING & ENGINEERING COMPANY
8565 N.W. 36th. St. Ste. 217, VIRGINIA GARDENS, Fl. 33166
Phone : (305)871-1530 . Fax : (305)871-1531

WALTER A. TILLIT Jr., P. E.
FLORIDA Lic. # 44167

ROLL-UP SHUTTER

THE HURRICANE SHUTTER CO.
2631 WEST 76 ST.
HIALEAH, FLORIDA 33016

REV. No	DESCRIPTION	DATE	REV. No	DESCRIPTION	DATE
1	–	–	3		
2	–	–	4		

AS SHOWN SCALE

12/9/96 DATE

96 – 390 DRAWING No

SHEET 6 OF 10

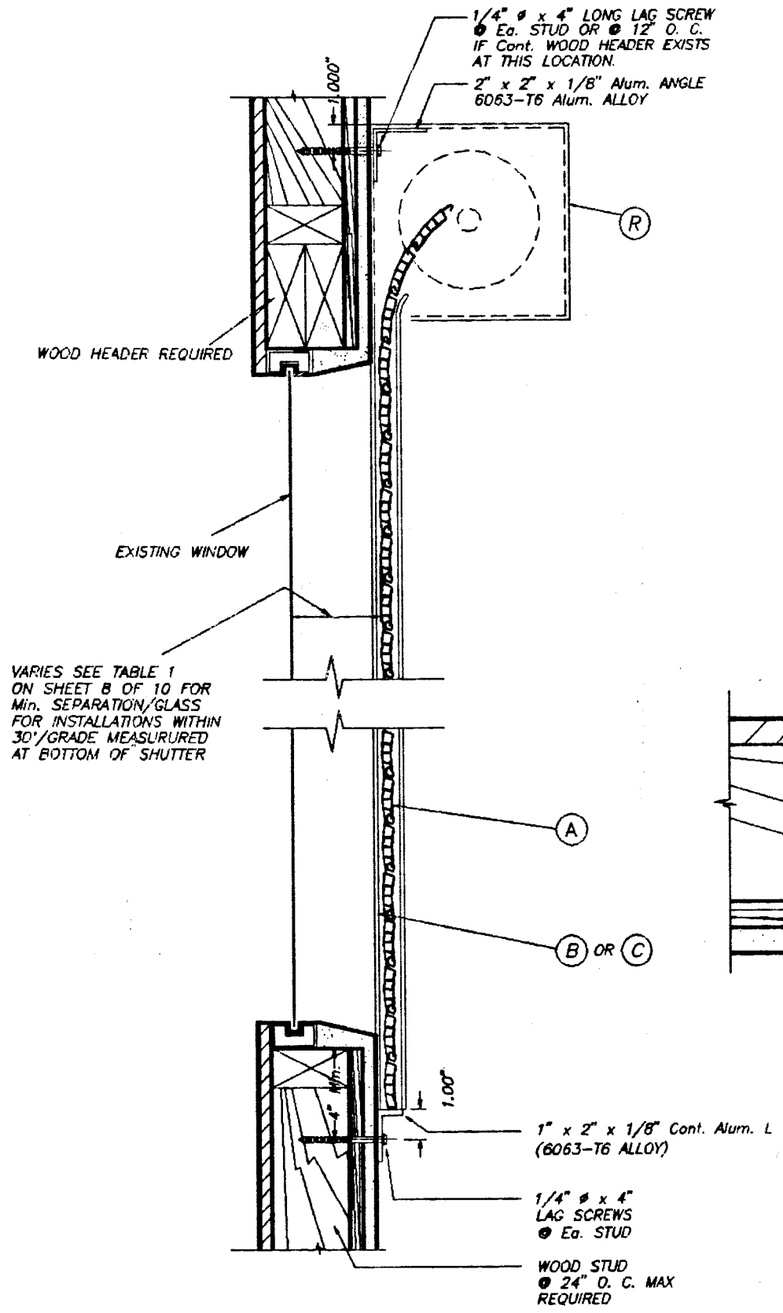

WALL MOUNTING INSTALLATION

SINGLE SPAN CONDITION

N. T. S.

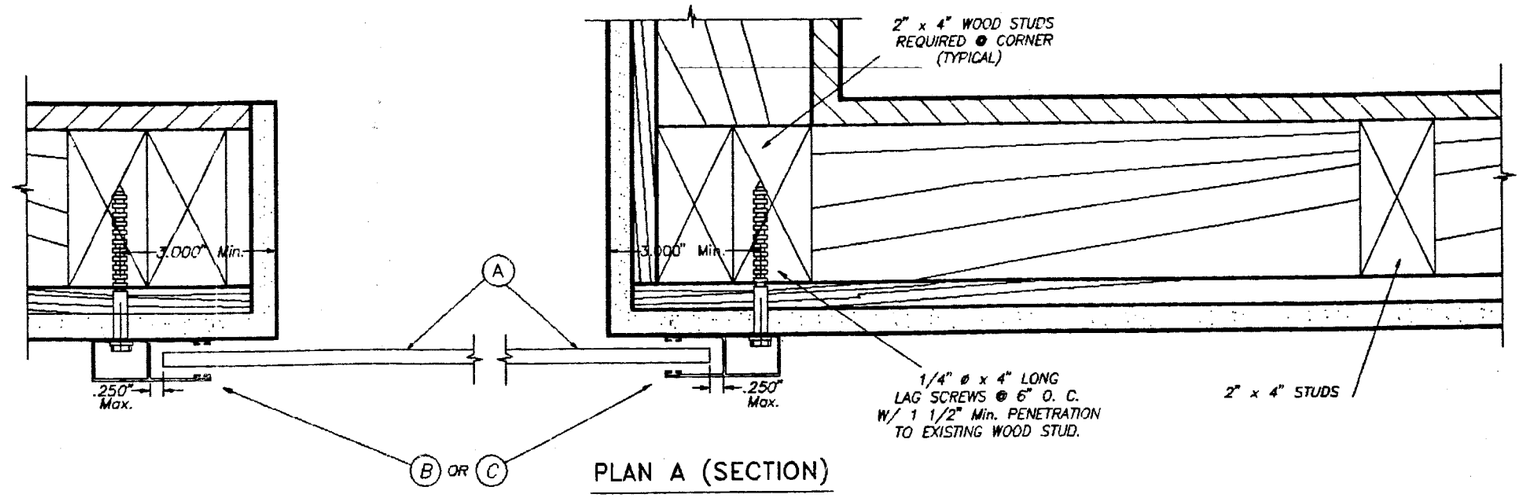

PLAN A (SECTION)

WALL MOUNT

N. T. S.

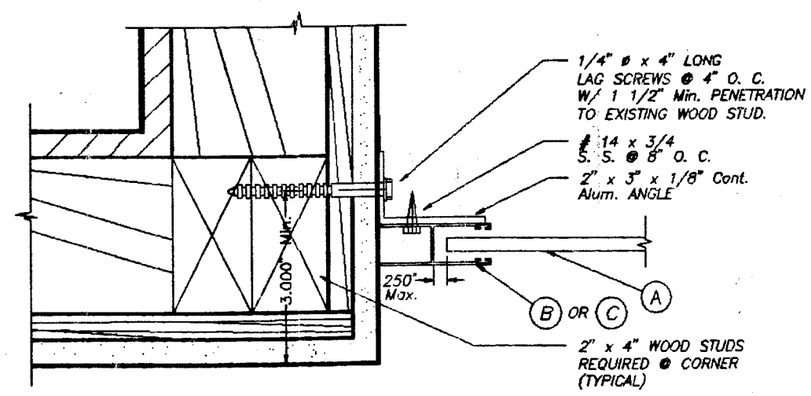

PLAN B (SECTION)

INSIDE MOUNT

N. T. S.

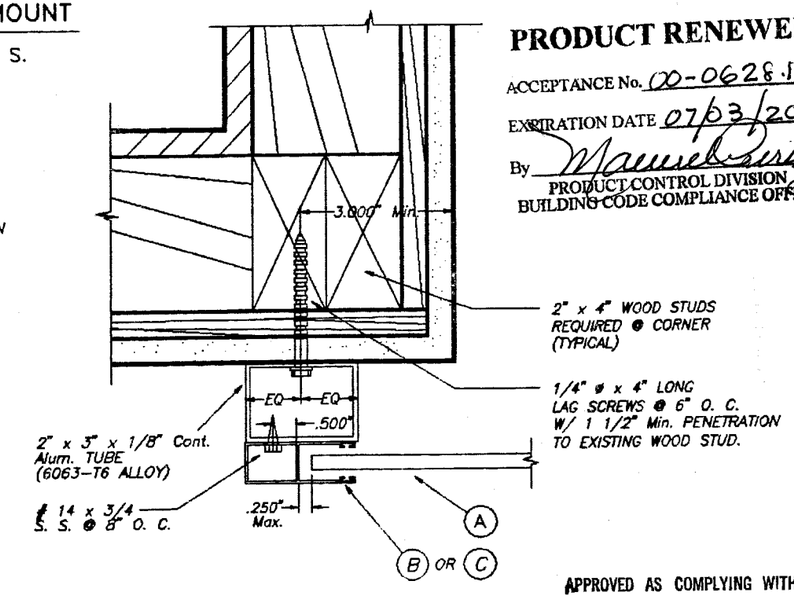

PLAN C

(BUILD-OUT)

N. T. S.

PRODUCT RENEWED

ACCEPTANCE No. 00-0628.13

EXPIRATION DATE 07/03/2003

By Manuel Perez

PRODUCT CONTROL DIVISION
BUILDING CODE COMPLIANCE OFFICE

NOTES:

1. INSTALLATIONS ARE ONLY VALID FOR BUILDINGS WITH MEAN ROOF HEIGHT LESS OR EQUAL THAN 30 FEET.
2. FOR NEW FRAME CONSTRUCTION: WOOD MEMBER TO BE SOUTHERN PINE No. 2 W/ SPECIFIC DENSITY OF 0.55 OR EQUAL.
3. MINIMUM PENETRATION OF LAG SCREWS INTO WOOD MEMBER TO BE 1 1/2".

APPROVED AS COMPLYING WITH THE SOUTH FLORIDA BUILDING CODE
DATE JULY 03 1997
BY Manuel Perez
PRODUCT CONTROL DIVISION
BUILDING CODE COMPLIANCE OFFICE
ACCEPTANCE NO. 97-0109.02

DADE COUNTY

Walter A. Tillit
5/29/97

TILTECO INC.
TILLIT TESTING & ENGINEERING COMPANY
8595 N.W. 38th. St., Ste. 217, VIRGINIA GARDENS, FL 33166
Phone : (305)871-1530 . Fax : (305)871-1531
WALTER A. TILLIT Jr., P. E.
FLORIDA Lic. # 44167

ROLL-UP SHUTTER

THE HURRICANE SHUTTER CO.
2631 WEST 76 ST.
HIALEAH, FLORIDA 33016

REV. No	DESCRIPTION	DATE	REV. No	DESCRIPTION	DATE
1	-	-	3		
2	-	-	4		

AS SHOWN SCALE

12/9/96 DATE

96 - .390 DRAWING No

SHEET 7 OF 10

SLAT PERFORMANCE CHART
MAXIMUM DESIGN PRESSURE RATING "W" (p. s. f.) AND CORRESPONDING MAXIMUM SLAT SPAN "L" FOR TYPE 1 SLAT

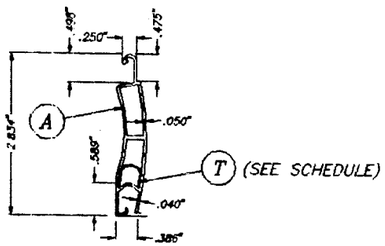

SLAT DETAIL

SCALE: 1/2" = 1"

DESIGN LOAD "W" (p.s.f.)	SLAT TYPE 1			
	MAXIMUM SLAT SPAN *		MINIMUM SEPARATION TO GLASS	
	W/O Ⓣ	W/ Ⓣ	SINGLE & MULTIPLE UNIT **	SINGLE & MULTIPLE UNIT ***
+64.0, −75.0	60"	N/A	3 3/16"	3"
+48.0, −61.0	69"	N/A	3 1/2"	3"
+48.0, −61.0	N/A	70"	3 3/4"	3"
+43.0, −55.0	N/A	72"	3 3/4"	3"

N/A = NOT APPLICABLE.

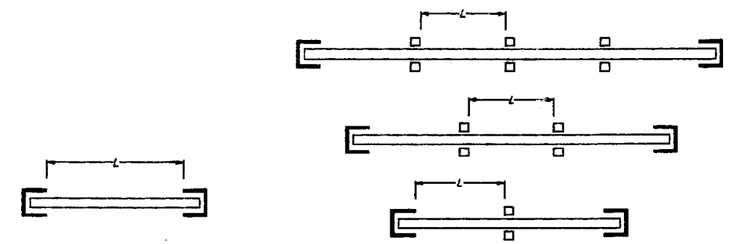

SINGLE SPAN

MULTIPLE SPAN

SPAN LAYOUT

* SPANS VALID FOR APPLICABLE ELEVATIONS OF BUILDING.

** MINIMUM SEPARARTION TO GLASS FOR SHUTTERS INSTALLED WITHIN THE FIRST 30'-0" ELEVATION OF BUILDING AND MAXIMUM SPAN. SEE TABLE 1 FOR Min. SEPARATION TO GLASS FOR SPANS LESS THAN Max. ALLOWED.

*** MINIMUM SEPARATION TO GLASS FOR SHUTTERS INSTALLED ABOVE 30'-0" ELEVATION OF BUILDING, MEASURED AT BOTTOM OF SHUTTER.

NOTE: MINIMUM SEPARATION TO GLASS FOR SINGLE AND MULTIPLE UNITS SHALL BE MEASURED FROM SLAT TO GLASS.

TABLE 1 :

SLAT SPAN (ft)	Min. SEPARATION TO GLASS
> 48" TO 60"	3 3/16"
> 36" TO 48"	2 5/8""
36" OR LESS	1 3/4"

PRODUCT RENEWED

ACCEPTANCE No. 00-0628.13

EXPIRATION DATE 07/03/2003

By Manuel Sira

PRODUCT CONTROL DIVISION
BUILDING CODE COMPLIANCE OFFICE

APPROVED AS COMPLYING WITH THE SOUTH FLORIDA BUILDING CODE

DATE July 03 1997

BY Manuel Sira

PRODUCT CONTROL DIVISION
BUILDING CODE COMPLIANCE OFFICE

ACCEPTANCE NO. 97-0109.02

DADE COUNTY

5/21/97

TILTECO INC.
TILLIT TESTING & ENGINEERING COMPANY
6595 N.W. 36th St., Ste. 217, VIRGINIA GARDENS, Fl. 33166
Phone : (305)871-1530 . Fax : (305)871-1531

WALTER A. TILLIT Jr., P. E.
FLORIDA Lic. # 44167

ROLL-UP SHUTTER

THE HURRICANE SHUTTER CO.
2631 WEST 76 ST.
HIALEAH, FLORIDA 33016

REV. No	DESCRIPTION	DATE	REV. No	DESCRIPTION	DATE
1	–	–	3		
2	–	–	4		

AS SHOWN
SCALE

12/9/96
DATE

96 - 390
DRAWING No

SHEET 8 OF 10

STORM BAR LOADING CHART

MAXIMUM DESIGN PRESSURE RATING "W" (p. s. f.) AND CORRESPONDING MAXIMUM SPAN "L" FOR A GIVEN TYPE OF STORM BAR AND STORM BAR SPACING. (USE NEGATIVE PRESSURE VALUES AS PER ASCE 7-88)

MAXIMUM DESIGN LOAD "W" (p.s.f.)	TYPE 1 STORM BAR 2" x 2" x .250"				TYPE 2 STORM BAR 2" x 3" x .125"				TYPE 3 STORM BAR 2" x 3" x .125" W/ INSERT				TYPE 4 STORM BAR 2" x 5" x .125" W/ INSERT			
	STORM BAR SPACING *				STORM BAR SPACING *				STORM BAR SPACING *				STORM BAR SPACING *			
	6'-0"	5'-0"	4'-0"	≤ 3'-0"	6'-0"	5'-0"	4'-0"	≤ 3'-0"	6'-0"	5'-0"	4'-0"	≤ 3'-0"	6'-0"	5'-0"	4'-0"	≤ 3'-0"
40.0	6'-5"	6'-8"	7'-0"	7'-7"	7'-3"	7'-6"	8'-0"	8'-7"	8'-8"	9'-0"	9'-0"	9'-0"	10'-0"	10'-0"	10'-0"	10'-0"
42.5	6'-4"	6'-7"	6'-11"	7'-6"	7'-1"	7'-5"	7'-11"	8'-6"	8'-5"	9'-0"	9'-0"	9'-0"	10'-0"	10'-0"	10'-0"	10'-0"
45.0	6'-3"	6'-6"	6'-10"	7'-5"	6'-11"	7'-4"	7'-9"	8'-4"	8'-2"	9'-0"	9'-0"	9'-0"	10'-0"	10'-0"	10'-0"	10'-0"
47.5	6'-2"	6'-5"	6'-9"	7'-4"	6'-9"	7'-3"	7'-8"	8'-3"	8'-0"	8'-9"	9'-0"	9'-0"	10'-0"	10'-0"	10'-0"	10'-0"
50.0	6'-0"	6'-4"	6'-8"	7'-2"	6'-8"	7'-2"	7'-7"	8'-2"	7'-9"	8'-7"	9'-0"	9'-0"	10'-0"	10'-0"	10'-0"	10'-0"
52.5	6'-0"	6'-3"	6'-7"	7'-1"	6'-5"	7'-0"	7'-6"	8'-0"	7'-7"	8'-4"	9'-0"	9'-0"	10'-0"	10'-0"	10'-0"	10'-0"
55.0	5'-11"	6'-2"	6'-6"	7'-0"	6'-3"	6'-11"	7'-5"	7'-11"	7'-5"	8'-1"	9'-0"	9'-0"	10'-0"	10'-0"	10'-0"	10'-0"
57.5	5'-10"	6'-1"	6'-5"	7'-0"	6'-2"	6'-9"	7'-4"	7'-10"	7'-3"	8'-0"	8'-11"	9'-0"	10'-0"	10'-0"	10'-0"	10'-0"
60.0	5'-9"	6'-0"	6'-4"	6'-11"	6'-0"	6'-7"	7'-3"	7'-9"	7'-1"	7'-9"	8'-8"	9'-0"	10'-0"	10'-0"	10'-0"	10'-0"
62.5	5'-8"	6'-0"	6'-4"	6'-10"	5'-11"	6'-6"	7'-2"	7'-7"	7'-0"	7'-8"	8'-6"	9'-0"	10'-0"	10'-0"	10'-0"	10'-0"
65.0	–	5'-11"	6'-3"	6'-9"	–	6'-4"	7'-1"	7'-7"	–	7'-6"	8'-4"	9'-0"	–	10'-0"	10'-0"	10'-0"
67.5	–	5'-11"	6'-2"	6'-8"	–	6'-3"	6'-11"	7'-6"	–	7'-4"	8'-2"	9'-0"	–	10'-0"	10'-0"	10'-0"
70.0	–	5'-10"	6'-1"	6'-7"	–	6'-1"	6'-10"	7'-5"	–	7'-2"	8'-0"	9'-0"	–	10'-0"	10'-0"	10'-0"
72.5	–	5'-9"	6'-0"	6'-7"	–	6'-0"	6'-8"	7'-5"	–	7'-1"	7'-11"	9'-0"	–	10'-0"	10'-0"	10'-0"
75.0	–	5'-8"	6'-0"	6'-6"	–	5'-11"	6'-7"	7'-4"	–	7'-0"	7'-10"	9'-0"	–	10'-0"	10'-0"	10'-0"

* STORM BAR SPACING SHALL BE SUCH THAT MAXIMUM SLAT SPAN SHALL NOT BE EXCEEDED.

HEADER LOADING CHART

MAXIMUM DESIGN PRESSURE RATING "W" (p. s. f.) AND CORRESPONDING MAXIMUM SPAN "L" (Ft.) FOR A GIVEN TYPE OF HEADER AND STORM BAR HEIGHT (Ft.) (USE NEGATIVE PRESSURE VALUES AS PER ASCE 7-88)

MAXIMUM DESIGN LOAD "W" (p.s.f)	TYPE 1 HEADER 2" x 3" x .125"		TYPE 2 HEADER 2" x 3" x .125" W/ INSERT		TYPE 3 HEADER 2" x 5" x .125"			TYPE 4 HEADER 2" x 5" x .125" W/ INSERT		
	STORM BAR HEIGHT		STORM BAR HEIGHT		STORM BAR HEIGHT			STORM BAR HEIGHT		
	≤ 5'-0"	> 5' TO 8'	≤ 5'-0"	> 5' TO 8'	≤ 5'-0"	> 5' TO 8'	> 8' TO 10'	≤ 5'-0"	> 5' TO 8'	> 8' TO 10'
40.0	11'-4	9'-0"	13'-6"	10'-8"	15'-6"	13'-2"	11'-9"	20'-1"	16'-0"	14'-4"
42.5	11'-0"	8'-9"	13'-0"	10'-4"	15'-3"	12'-9"	11'-5"	19'-8"	15'-6"	13'-10"
45.0	10'-9"	8'-6"	12'-8"	10'-0"	15'-1"	12'-5"	11'-1"	19'-1"	15'-1"	13'-6"
47.5	10'-6"	8'-4"	12'-4"	9'-9"	14'-10"	12'-1"	10'-9"	18'-7"	14'-8"	13'-1"
50.0	10'-3"	8'-0"	12'-0"	9'-6"	14'-8"	11'-9"	10'-6"	18'-1"	14'-4"	12'-10"
52.5	10'-0"	7'-10"	11'-9"	9'-4"	14'-6"	11'-6"	10'-3"	17'-8"	14'-0"	12'-6"
55.0	9'-9"	7'-8"	11'-6"	9'-0"	14'-2"	11'-3"	10'-0"	17'-3"	13'-8"	12'-2"
57.5	9'-6"	7'-6"	11'-3"	8'-10"	13'-10"	11'-0"	9'-10"	16'-10"	13'-4"	11'-11"
60.0	9'-4"	7'-4"	11'-0"	8'-8"	13'-7"	10'-9"	9'-7"	16'-6"	13'-1"	11'-8"
62.5	9'-2"	7'-3"	10'-9"	8'-6"	13'-4"	10'-6"	9'-5"	16'-2"	12'-10"	11'-5"
65.0	9'-0"	7'-1"	10'-6"	8'-4"	13'-0"	10'-4"	9'-3"	15'-10"	12'-7"	11'-3"
67.5	8'-10"	6'-11"	10'-4"	8'-2"	12'-10"	10'-1"	9'-1"	15'-7"	12'-4"	11'-0"
70.0	8'-7"	6'-10"	10'-2"	8'-0"	12'-7"	9'-11"	8'-11"	15'-4"	12'-1"	10'-10"
72.5	8'-6"	6'-8"	10'-0"	7'-11"	12'-4"	9'-9"	8'-9"	15'-0"	11'-11"	10'-7"
75.0	8'-4"	6'-7"	9'-10"	7'-10"	12'-2"	9'-7"	8'-7"	14'-9"	11'-8"	10'-6"

PRODUCT RENEWED
ACCEPTANCE No. 00-0628.13
EXPIRATION DATE 07/03/2003
By Manuel Perez
PRODUCT CONTROL DIVISION
BUILDING CODE COMPLIANCE OFFICE

APPROVED AS COMPLYING WITH THE SOUTH FLORIDA BUILDING CODE
DATE JULY 03 1997
BY Manuel Perez
PRODUCT CONTROL DIVISION
BUILDING CODE COMPLIANCE OFFICE
ACCEPTANCE NO. 97-0109.02

DADE COUNTY

Walter A. Tillit
5/21/97

TILTECO INC.
TILLIT TESTING & ENGINEERING COMPANY
6595 N.W. 36th. St., Sta. 217, VIRGINIA GARDENS, Fl. 33166
Phone : (305)871-1530 . Fax : (305)871-1531
WALTER A. TILLIT Jr., P. E.
FLORIDA Lic. # 44167

ROLL-UP SHUTTER

THE HURRICANE SHUTTER CO.
2831 WEST 76 ST.
HIALEAH, FLORIDA 33016

REV. No	DESCRIPTION	DATE	REV. No	DESCRIPTION	DATE
1	–	–	3		
2	–	–	4		

AS SHOWN
SCALE
12/9/96
DATE
96 – 390
DRAWING No
SHEET 9 OF 10

MULLION LOADING CHART

MAXIMUM DESIGN PRESSURE RATING "W" (p. s. f.) AND CORRESPONDING MAXIMUM SPAN "L" (Ft.) FOR A GIVEN TYPE OF MULLION AND MULLION SPACING.

(USE NEGATIVE PRESSURE VALUES AS PER ASCE 7-88)

MAXIMUM DESIGN LOAD "W" (p.s.f.)	TYPE 1 MULLION 2" x 3" x .125"			TYPE 2 MULLION 2" x 3" x .125" W/ INSERT				TYPE 3 MULLION 2" x 5" x .125"				TYPE 4 MULLION 2" x 5" x .125" W/ INSERT			
	MULLION SPACING			MULLION SPACING				MULLION SPACING				MULLION SPACING			
	3' OR LESS	> 3' TO 4'	> 4' TO 5'	3' OR LESS	> 3' TO 4'	> 4' TO 5'	> 5' TO 8'	3' OR LESS	> 3' TO 4'	> 4' TO 5'	> 5' TO 8'	3' OR LESS	> 3' TO 4'	> 4' TO 5'	> 5' TO 8'
40.0	7'-3"	6'-7"	6'-1"	9'-7"	8'-8"	8'-0"	7'-10"	10'-11"	9'-11"	10'-7"	9'-0"	15'-4"	13'-11"	12'-11"	12'-8"
42.5	7'-1"	6'-5"	6'-0"	9'-4"	8'-6"	7'-10"	7'-9"	10'-8"	9'-8"	10'-4"	8'-10"	15'-0"	13'-8"	12'-8"	12'-5"
45.0	7'-0"	6'-4"	5'-11"	9'-2"	8'-4"	7'-9"	7'-7"	10'-6"	9'-6"	10'-2"	8'-8"	14'-9"	13'-4"	12'-5"	12'-2"
47.5	6'-10"	6'-3"	5'-9"	9'-0"	8'-2"	7'-7"	7'-6"	10'-3"	9'-4"	10'-0"	8'-6"	14'-6"	13'-2"	12'-2"	12'-0"
50.0	6'-9"	6'-1"	5'-8"	8'-10"	8'-0"	7'-6"	7'-4"	10'-1"	9'-2"	9'-9"	8'-4"	14'-2"	12'-11"	12'-0"	11'-10"
52.5	6'-7"	6'-0"	5'-7"	8'-9"	7'-11"	7'-4"	7'-2"	9'-11"	9'-0"	9'-8"	8'-3"	14'-0"	12'-9"	11'-10"	11'-7"
55.0	6'-6"	5'-11"	5'-6"	8'-7"	7'-10"	7'-3"	7'-1"	9'-10"	8'-11"	9'-6"	8'-1"	13'-9"	12'-6"	11'-8"	11'-5"
57.5	6'-5"	5'-10"	5'-5"	8'-5"	7'-8"	7'-1"	7'-0"	9'-8"	8'-9"	9'-4"	8'-0"	13'-7"	12'-4"	11'-5"	11'-3"
60.0	6'-4"	5'-9"	5'-4"	8'-4"	7'-7"	7'-0"	6'-10"	9'-6"	8'-8"	9'-3"	7'-11"	13'-4"	12'-2"	11'-4"	11'-1"
62.5	6'-3"	5'-8"	5'-3"	8'-2"	7'-6"	6'-11"	6'-10"	9'-5"	8'-6"	9'-1"	7'-9"	13'-2"	12'-0"	11'-1"	10'-11"
65.0	6'-2"	5'-7"	5'-3"	8'-1"	7'-4"	6'-10"	6'-8"	9'-3"	8'-5"	9'-0"	7'-8"	13'-0"	11'-10"	11'-0"	10'-8"
67.5	6'-1"	5'-7"	5'-2"	8'-0"	7'-3"	6'-9"	6'-7"	9'-2"	8'-4"	8'-10"	7'-7"	12'-10"	11'-8"	10'-10"	10'-8"
70.0	6'-0"	5'-6"	5'-1"	7'-11"	7'-2"	6'-8"	6'-6"	9'-0"	8'-3"	8'-9"	7'-6"	12'-8"	11'-6"	10'-9"	10'-6"
72.5	5'-11"	5'-5"	5'-0"	7'-10"	7'-1"	6'-7"	6'-6"	8'-11"	8'-1"	8'-8"	7'-5"	12'-6"	11'-5"	10'-7"	10'-4"
75.0	5'-11"	5'-4"	5'-0"	7'-9"	7'-0"	6'-6"	6'-5"	8'-10"	8'-0"	8'-7"	7'-4"	12'-5"	11'-3"	10'-6"	10'-2"

MAXIMUM ANCHOR SPACING (In.) AT SIDE RAILS VERSUS EDGE DISTANCE = E. D.

MAXIMUM SIDE RAILS SPACINGS SHOWN ON SHEET 4 OF 10 ARE VALID FOR 3 1/2" EDGE DISTANCE. FOR E. D. LESS THAN 3 1/2", REDUCE ANCHOR SPACING BY MULTIPLYING SPACINGS SHOWN ON THAT SHEET BY THE FOLLOWING FACTORS.

ACTUAL E. D.= EDGE DISTANCE	FACTOR
3 1/2"	1.0
3"	.86
2 1/2"	.71
2"	.50

PRODUCT RENEWED
ACCEPTANCE No. 00-0628.13
EXPIRATION DATE 07/03/2003
By
PRODUCT CONTROL DIVISION
BUILDING CODE COMPLIANCE OFFICE

APPROVED AS COMPLYING WITH THE SOUTH FLORIDA BUILDING CODE
DATE JULY 03 1997
BY
PRODUCT CONTROL DIVISION
BUILDING CODE COMPLIANCE OFFICE
ACCEPTANCE NO. 97-0109.02

DADE COUNTY

5/21/97

TILTECO INC.
TILLIT TESTING & ENGINEERING COMPANY
8595 N.W. 36th. St., Ste. 217, VIRGINIA GARDENS, Fl. 33166
Phone : (305)871-1530 . Fax : (305)871-1531
WALTER A. TILLIT Jr., P. E.
FLORIDA Lic. # 44167

ROLL-UP SHUTTER

THE HURRICANE SHUTTER CO.
2631 WEST 76 ST.
HIALEAH, FLORIDA 33016

REV. No	DESCRIPTION	DATE	REV. No	DESCRIPTION	DATE
1	-	-	3		
2	-	-	4		

AS SHOWN
SCALE
12/9/96
DATE
96 - 390
DRAWING No
SHEET 10 OF 10