MIAMI-DADE COUNTY, FLORIDA
METRO-DADE FLAGLER BUILDING

BUILDING CODE COMPLIANCE OFFICE
METRO-DADE FLAGLER BUILDING
140 WEST FLAGLER STREET, SUITE 1603
MIAMI, FLORIDA 33130-1563
(305) 375-2901 FAX (305) 375-2908

CONTRACTOR LICENSING SECTION
(305) 375-2527 FAX (305) 375-2558

CONTRACTOR ENFORCEMENT DIVISION
(305) 375-2966 FAX (305) 375-2908

PRODUCT CONTROL DIVISION
(305) 375-2902 FAX (305) 372-6339

PRODUCT CONTROL NOTICE OF ACCEPTANCE

EZ Lock Shutter, Corp.
10450 SW 184 Terr.
Miami ,FL 33157

Your application for Notice of Acceptance (NOA) of:
ASSA / Economy Accordion Shutter
under Chapter 8 of the Code of Miami-Dade County governing the use of Alternate Materials and Types of Construction, and completely described herein, has been recommended for acceptance by the Miami-Dade County Building Code Compliance Office (BCCO) under the conditions specified herein.

This NOA shall not be valid after the expiration date stated below. BCCO reserves the right to secure this product or material at any time from a jobsite or manufacturer's plant for quality control testing. If this product or material fails to perform in the approved manner, BCCO may revoke, modify, or suspend the use of such product or material immediately. BCCO reserves the right to revoke this approval, if it is determined by BCCO that this product or material fails to meet the requirements of the South Florida Building Code.

The expense of such testing will be incurred by the manufacturer.

ACCEPTANCE NO.: 00-0721.07
EXPIRES: 08/16/2003

Raul Rodriguez
Chief Product Control Division

THIS IS THE COVERSHEET, SEE ADDITIONAL PAGES FOR SPECIFIC AND GENERAL CONDITIONS
BUILDING CODE & PRODUCT REVIEW COMMITTEE

This application for Product Approval has been reviewed by the BCCO and approved by the Building Code and Product Review Committee to be used in Miami-Dade County, Florida under the conditions set forth above.

Francisco J. Quintana, R.A.
Director
Miami-Dade County
Building Code Compliance Office

APPROVED: 08/16/2000

NOTICE OF ACCEPTANCE: SPECIFIC CONDITIONS

1. SCOPE

This approves an aluminum accordion type shutter, as described in Section 2 of this Notice of Acceptance, designed to comply with the South Florida Building Code, 1994 Edition for Miami-Dade County, for the locations where the pressure requirements, as determined by SFBC Chapter 23, do not exceed the Design Pressure Rating values indicated in the approved drawings.

2. PRODUCT DESCRIPTION

This aluminum accordion type shutter and its components shall be constructed in strict compliance with the following documents: Drawing No. 99-162 titled "ASSA/ Economy Accordion Shutter", prepared by Tilteco Inc., dated May 10, 1999, sheets 1 through 9 of 9, bearing the Miami-Dade County Product Control Approval stamp with the Notice of Acceptance number and approval date by the Miami-Dade County Product Control Division. These documents shall hereinafter be referred to as the approved drawings.

3. LIMITATIONS

All permanent set components, included but not limited to embedded anchor bolts, threaded cones, metal shields, headers and sills, must be protected against corrosion, contamination and damage at all times.

4. INSTALLATION

This aluminum accordion type shutter and its components shall be installed in strict compliance with the approved drawings.

5. LABELING

Each unit shall bear a permanent label with the manufacturer's name or logo, city, state and the following statement: "Miami-Dade County Product Control Approved".

6. BUILDING PERMIT REQUIREMENTS

6.1 Application for building permit shall be accompanied by copies of the following:

- **6.1.1** This Notice of Acceptance.
- **6.1.2** Duplicate copies of the approved drawings, as identified in Section 2 of this Notice of Acceptance, clearly marked to show the components selected for the proposed installation.
- **6.1.3** Any other documents required by the Building Official or the South Florida Building Code (SFBC) in order to properly evaluate the installation of this system.

Helmy A. Makar

Helmy A. Makar, P.E.- Product Control Examiner
Product Control Division

EZ-Lock Shutters, Corporation

ACCEPTANCE No. : 00-0721.07

APPROVED : AUG 1 6 2000

EXPIRES : AUG 1 6 2003

NOTICE OF ACCEPTANCE: STANDARD CONDITIONS

1 Renewal of this Acceptance (approval) shall be considered after a renewal application has been filed and the original submitted documents, including test-supporting data, engineering documents, are no older than eight (8) years.

2. Any and all approved products shall be permanently labeled with the manufacturer's name, city, state, and the following statement: "Miami-Dade County Product Control Approved", or as specifically stated in the specific conditions of this Acceptance.

3. Renewals of Acceptance will not be considered if:
   a. There has been a change in the South Florida Building Code affecting the evaluation of this product and the product is not in compliance with the code changes.
   b. The product is no longer the same product (identical) as the one originally approved.
   c. If the Acceptance holder has not complied with all the requirements of this acceptance, including the correct installation of the product.
   d. The engineer, who originally prepared, signed and sealed the required documentation initially submitted, is no longer practicing the engineering profession.

4. Any revision or change in the materials, use, and/or manufacture of the product or process shall automatically be cause for termination of this Acceptance, unless prior written approval has been requested (through the filing of a revision application with appropriate fee) and granted by this office.

5. Any of the following shall also be grounds for removal of this Acceptance:
   a. Unsatisfactory performance of this product or process.
   b. Misuse of this Acceptance as an endorsement of any product, for sales, advertising or any other purposes.

6. The Notice of Acceptance number preceded by the words Miami-Dade County, Florida, and followed by the expiration date may be displayed in advertising literature. If any portion of the Notice of Acceptance is displayed, then it shall be done in its entirety.

7. A copy of this Acceptance as well as approved drawings and other documents, where it applies, shall be provided to the user by the manufacturer or its distributors and shall be available for inspection at the job site at all time. The engineer needs not reseal the copies.

8. Failure to comply with any section of this Acceptance shall be cause for termination and removal of Acceptance.

9. This Notice of Acceptance consists of pages 1, 2 and this last page 3.

END OF THIS ACCEPTANCE

Helmy A. Makar

Helmy A. Makar, P.E.- Product Control Examiner
Product Control Division

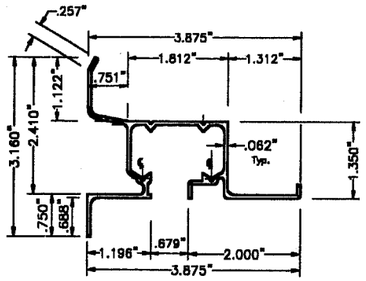

Ⓐ HEADER-WALL MOUNT.

Ⓐ SILL-WALL MOUNT. (INVERTED USE)

SCALE: 3/8" = 1"

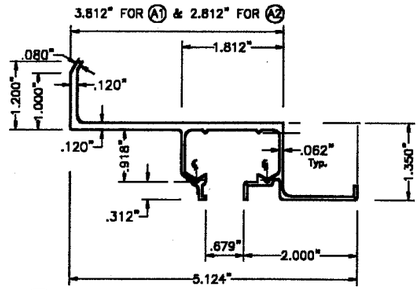

Ⓐ1 & Ⓐ2 HEADERS-WALL MOUNT.

SCALE: 3/8" = 1"

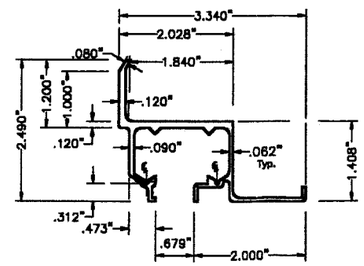

Ⓐ3 HEADERS-WALL MOUNT.

SCALE: 3/8" = 1"

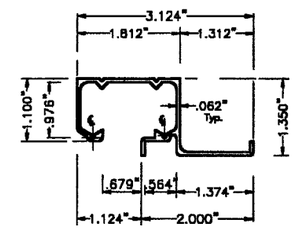

Ⓑ HEADER CEILING MOUNT.

SCALE: 3/8" = 1"

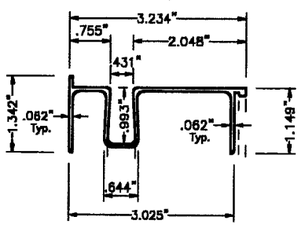

Ⓒ SILL

SCALE: 3/8" = 1"

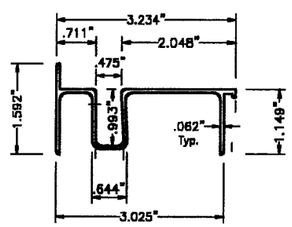

Ⓒ1 SILL

SCALE: 3/8" = 1"

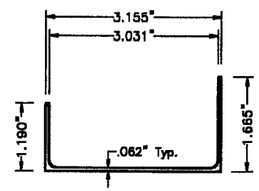

Ⓓ SILL BOTTOM ADAPTER

SCALE: 3/8" = 1"

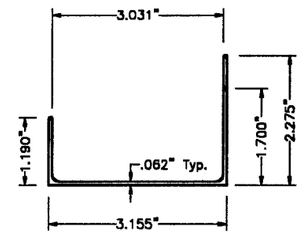

Ⓓ1 SILL BOTTOM ADAPTER

SCALE: 3/8" = 1"

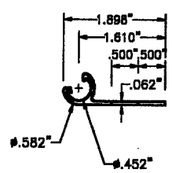

Ⓔ 180° STARTER

SCALE: 3/8" = 1"

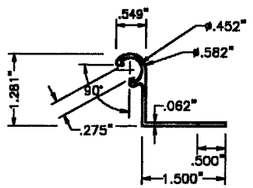

Ⓔ1 90° STARTER

SCALE: 3/8" = 1"

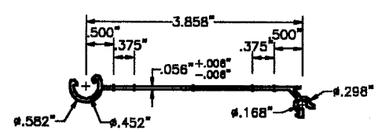

Ⓕ LOUVER BLADE

SCALE: 3/8" = 1"

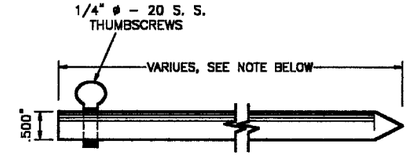

Ⓖ LOCKING PIN

SCALE: 3/8" = 1"

12" Min. FOR UP TO 9'-0" SHUTTER BLADE LENGTHS AND 24" Min. FOR SHUTTER BLADE LENGTHS GREATER THAN 9'-0".

GENERAL NOTES:

1. ACCORDION SHUTTER HAS BEEN DESIGNED IN ACCORDANCE WITH THE DADE COUNTY, 1994 EDITION OF THE SOUTH FLORIDA BUILDING CODE.
   DESIGN WIND LOADS SHALL BE DETERMINED AS PER SECTION 8 OF ASCE 7-88, WITH 110 m.p.h. BASIC WIND SPEED.
   ACCORDION SHUTTER'S ADEQUACY FOR IMPACT AND FATIGUE RESISTANCE HAS BEEN VERIFIED IN ACCORDANCE WITH SECTIONS 2315 & 2314 RESPECTIVELY OF THE ABOVE MENTIONED CODE.
2. STAINLESS STEEL SHEET METAL SCREWS USED AT LOUVER PIN SHALL BE # 10 x 3", 410-HT MINIMUM SERIES W/ 135.0 ksi YIELD POINT & 180 ksi TENSILE STRENGTH. SCREWS SHALL BE COATED WITH XYLAN 5000 SERIES FLUOROPOLYMER COATINGS AS MANUFACTURED BY WHITFORD Co, BOX 507. WEST CHESTER PA. 19381.
3. ALL ALUMINUM EXTRUSIONS SHALL BE 6063-T6 ALLOY (UNLESS OTHERWISE NOTED).
4. ALL SCREWS TO BE STAINLESS STEEL 304 OR 316 SERIES W/ 50 ksi YIELD POINT AND 90 ksi TENSILE STRENGTH.
5. ALL ALUMINUM POP RIVETS TO BE 5052 ALUMINUM ALLOY WITH ALUMINUM MANDREL.
6. BOLTS TO BE 2024-T4 ALUMINUM ALLOY GALVANIZED OR STAINLESS STEEL WITH 35 ksi MINIMUM MINIMUM YIELD POINT.
7. ANCHORS TO WALL SHALL BE AS FOLLOWS: (UNLESS OTHERWISE NOTED)
   (A) TO EXISTING POURED CONCRETE:
   - 1/4" ø TAPCON ANCHORS, AS MANUFACTURED BY I.T.W. RAMSET OR ELCO INDUSTRIES, INC.
   - 1/4" ø RAWL ZAMAC NAILIN ANCHORS, AS MANUFACTURED BY THE RAWL PLUG COMPANY, INC.
   - 1/4" ø x 7/8" RAWL CALK-IN AS MANUFACTURED BY THE RAWL PLUG COMPANY, INC.

   NOTES:
   A.1) MINIMUM EMBEDMENT OF TAPCON ANCHORS INTO POURED CONCRETE IS 1 3/4". MINIMUM EMBEDMENT OF RAWL ZAMAC NAILIN IS 1 1/2"
   A.2) 7/8" RAWL CALK-IN ANCHORS SHALL BE ENTIRELY EMBEDDED INTO THE POURED CONCRETE. NO EMBEDMENT INTO STUCCO SHALL BE PERMITTED.
   1/4" ø-20 SCREWS USED SHALL BE 1 1/2" LONG MINIMUM SHOULD STUCCO EXIST.
   A.3) IN CASE THAT PRECAST STONE, PRECAST CONCRETE PANELS, OR PAVERS BE FOUND ON THE EXISTING WALL OR FLOOR, ANCHORS SHALL BE LONG ENOUGH TO REACH THE MAIN STRUCTURE BEHIND SUCH PANELS. ANCHORAGE SHALL BE AS INDICATED ON NOTES A.1) & A.2) ABOVE.

   (B) TO EXISTING CONCRETE BLOCK WALL:
   - 1/4" ø TAPCON ANCHORS AS MANUFACTURED BY I.T.W. RAMSET OR ELCO INDUSTRIES, INC.
   - 1/4" ø RAWL ZAMAC NAILIN ANCHORS AS MANUFACTURED THE RAWL PLUG COMPANY, INC.
   - 1/4" ø x 7/8" RAWL CALK-IN AS MANUFACTURED BY THE RAWL PLUG COMPANY, INC.

   NOTES:
   B.1) MINIMUM EMBEDMENT OF TAPCON ANCHORS, AND RAWL ZAMAC NAILIN ANCHORS INTO THE CONCRETE BLOCK UNIT SHALL BE 1 1/4".
   B.2) 7/8" RAWL CALK-IN ANCHORS SHALL BE ENTIRELY EMBEDDED INTO THE CONCRETE BLOCK UNIT. NO EMBEDMENT INTO STUCCO SHALL BE PERMITTED.
   1/4" ø-20 SCREWS USED SHALL BE 1 1/2" LONG MINIMUM SHOULD STUCCO EXIST.
   B.3) IN CASE THAT PRECAST STONE OR PRECAST CONCRETE PANELS BE FOUND ON THE EXISTING WALL, ANCHORS SHALL BE LONG ENOUGH TO REACH THE MAIN STRUCTURE BEHIND SUCH PANELS. ANCHORAGE SHALL BE AS INDICATED ON NOTES B.1) & B.2) ABOVE.

   (C) ANCHORS SHALL BE INSTALLED FOLLOWING ALL OF THE RECOMENDATIONS AND SPECIFICATIONS OF THE ANCHOR'S MANUFACTURER.
8. BLADE Ⓕ, AND THE KNUCKLES FOR CENTERMATES Ⓗ & Ⓘ, & THE STARTERS Ⓔ & Ⓔ1 ARE UNDER THE PATENT OF EASTERN METALS.
9. IT SHALL BE THE RESPONSIBILITY OF THE CONTRACTOR TO VERIFY THE SOUNDNESS OF THE STRUCTURE WHERE SHUTTER IS TO BE ATTACHED TO INSURE PROPER ANCHORAGE.
10. SHUTTER'S MANUFACTURER STAMP SHALL BE PLACED ON THE EXPOSED SURFACE OF THE FEMALE LOCK SLAT (COMPONENT Ⓘ).
    ONE LABEL SHALL BE PLACED FOR EVERY OPENING. LABEL SHALL READ AS FOLLOWS:
    EZ-LOCK SHUTTERS CO.
    MIAMI, FL. 33157
    DADE COUNTY PRODUCT CONTROL APPROVED.

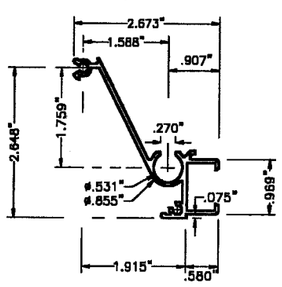

Ⓗ MALE LOCK SLAT

SCALE: 3/8" = 1"

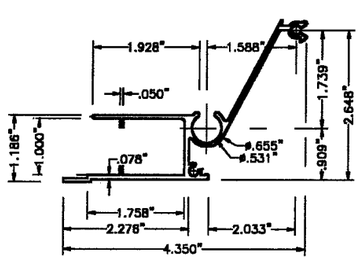

Ⓘ FEMALE LOCK SLAT

SCALE: 3/8" = 1"

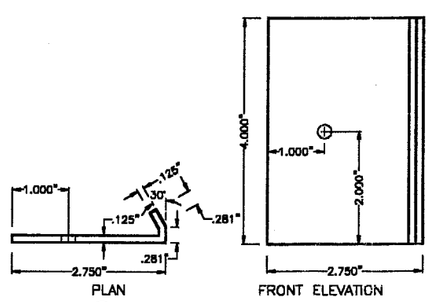

Ⓙ OUTSIDE LOCKER # 1

SCALE: 3/8" = 1"

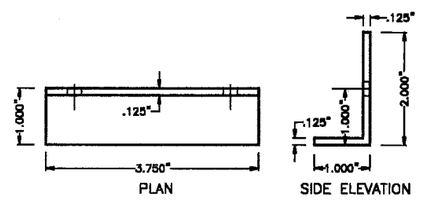

Ⓚ INSIDE LOCKER # 2

SCALE: 3/8" = 1"

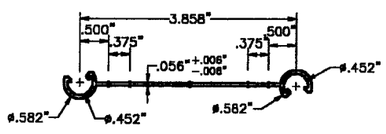

Ⓛ FEMALE/FEMALE

ECONO BLADE

SCALE: 3/8" = 1"

COMPONENTS

APPROVED AS COMPLYING WITH THE SOUTH FLORIDA BUILDING CODE
DATE 08/16/2000
BY [signature]
PRODUCT CONTROL DIVISION
BUILDING CODE COMPLIANCE OFFICE
ACCEPTANCE NO. 00-0721.07
DADE COUNTY

5/10/99

TILTECO INC.
TILLIT TESTING & ENGINEERING COMPANY
8595 N.W. 36th. St., Ste. 217, VIRGINIA GARDENS, FLORIDA 33166
Phone : (305)871-1530 . Fax : (305)871-1531
WALTER A. TILLIT Jr., P. E.
FLORIDA Lic. # 44167

ASSA / ECONOMY ACCORDION SHUTTER

EZ-LOCK SHUTTERS CO.
(ASSA # 132)
10450 SW 184 TERR.
MIAMI, FL. 33157

REV. NO	DESCRIPTION	DATE	REV. No	DESCRIPTION	DATE
1	-	-	3	-	-
2	-	-	4	-	-

AS SHOWN SCALE

5/10/99 DATE

99 - 162 DRAWING No

SHEET 1 OF 9

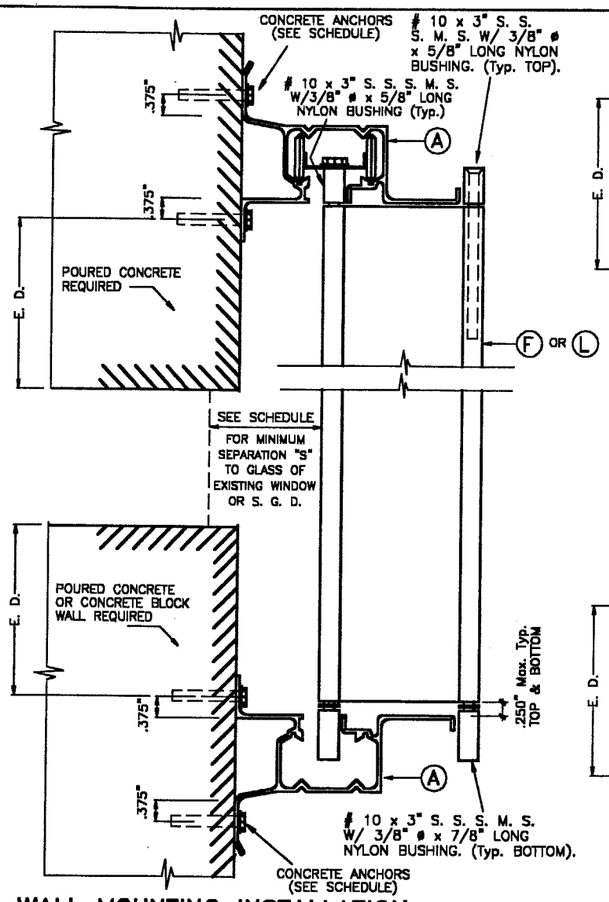

WALL MOUNTING INSTALLATION – SECTION A

SCALE: 3/8" = 1"

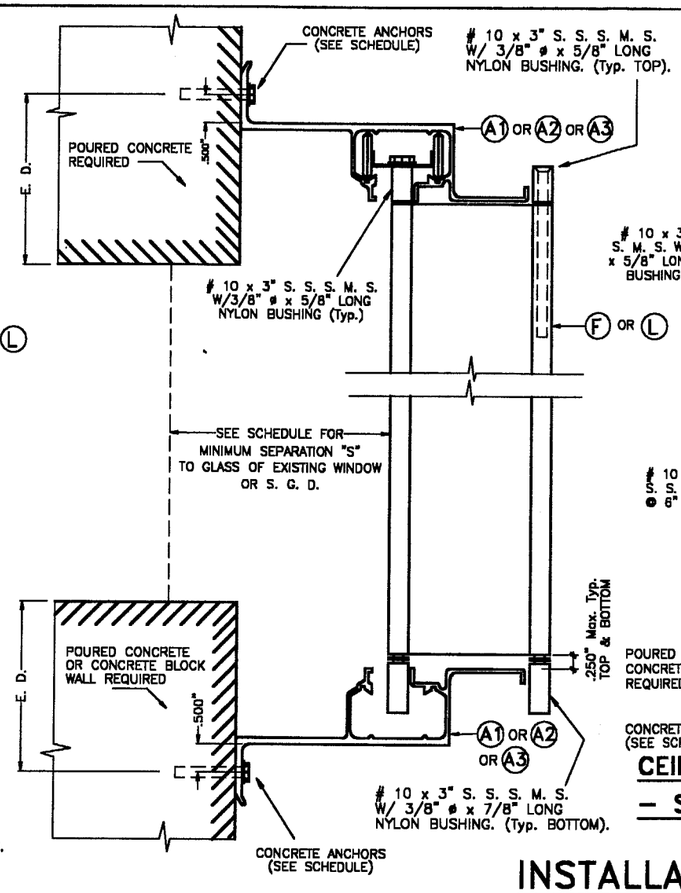

WALL MOUNTING INSTALLATION – SECTION A1

SCALE: 3/8" = 1"

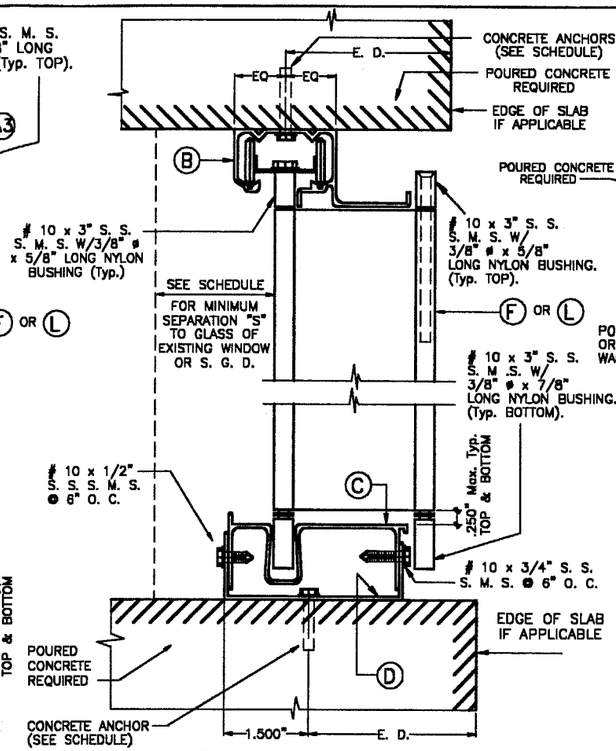

CEILING & FLOOR MOUNT. INSTALLAT. – SECTION B

SCALE: 3/8" = 1"

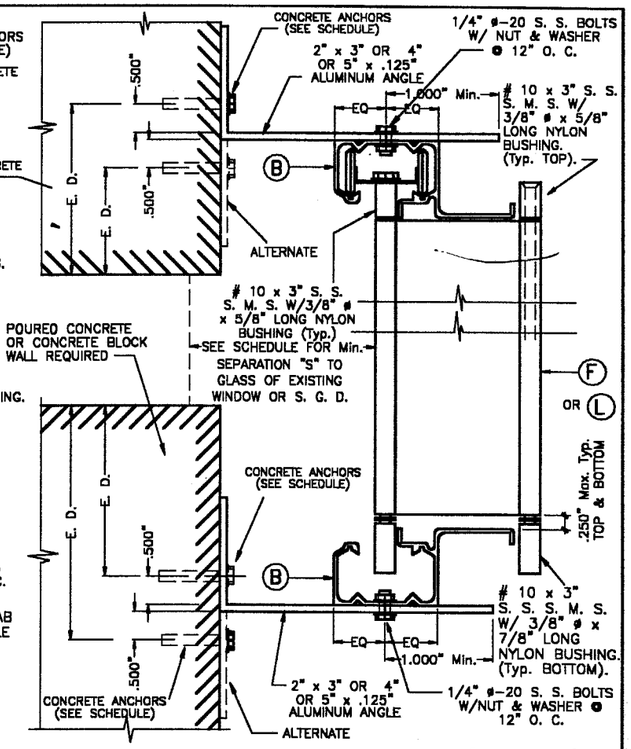

WALL MOUNTING INSTALLATION (OFFSET) – SECTION C

SCALE: 3/8" = 1

INSTALLATION DETAILS

E. D. = EDGE DISTANCE (SEE SCHEDULE ON SHEET 8 OF 9)

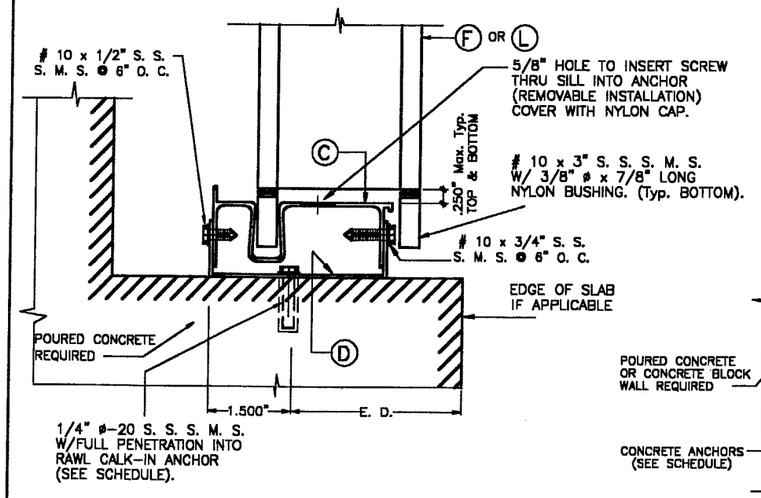

REMOVABLE FLOOR MOUNTING INSTALLATION – SECTION B1

SCALE: 3/8" = 1"

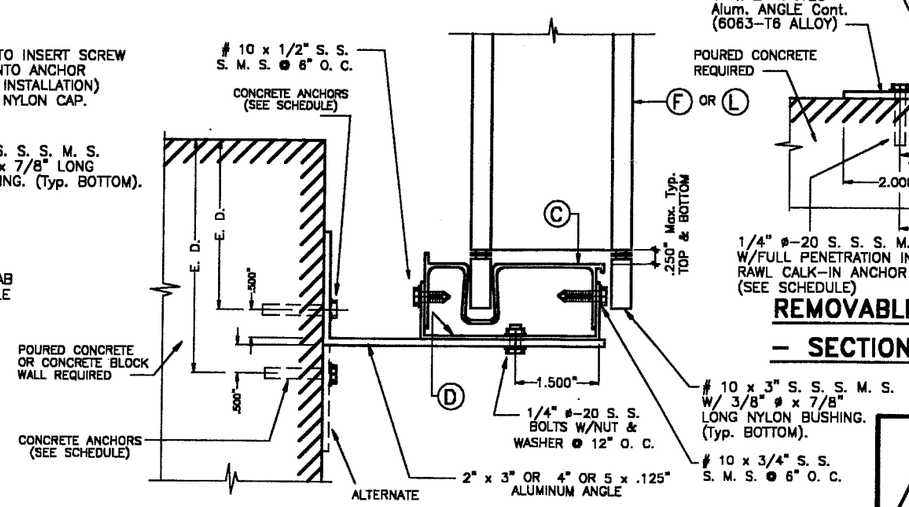

WALL MOUNTING INSTALLATION (OFFSET) – SECTION C1

SCALE: 3/8" = 1"

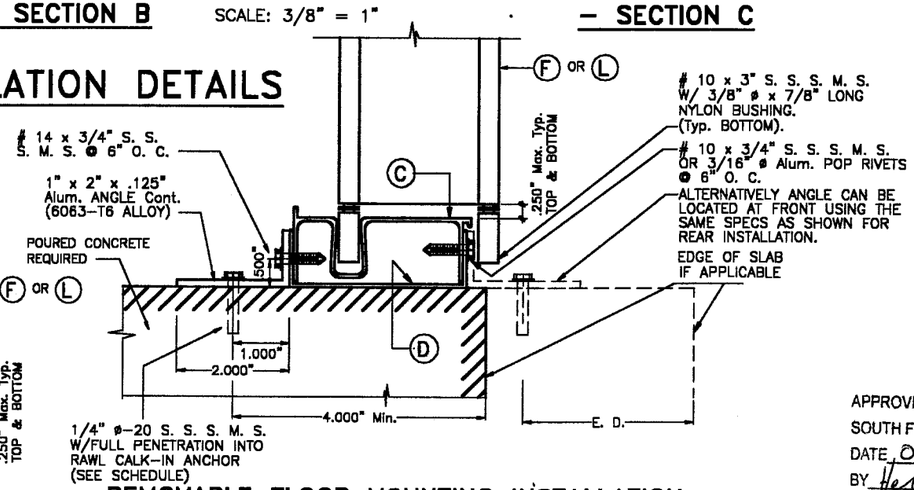

REMOVABLE FLOOR MOUNTING INSTALLATION – SECTION B2

SCALE: 3/8" = 1"

APPROVED AS COMPLYING WITH THE SOUTH FLORIDA BUILDING CODE
DATE 08/16/2000
BY Helmy A. Mak
PRODUCT CONTROL DIVISION
BUILDING CODE COMPLIANCE OFFICE
ACCEPTANCE NO. 00-0721.07
DADE COUNTY

TILTECO INC.
TILLIT TESTING & ENGINEERING COMPANY
8595 N.W. 38th. St., Ste. 217, VIRGINIA GARDENS, FLORIDA 33166
Phone : (305)871-1530 . Fax : (305)871-1531
WALTER A. TILLIT Jr., P. E.
FLORIDA Lic. # 44167

ASSA / ECONOMY ACCORDION SHUTTER

EZ-LOCK SHUTTERS CO.
(ASSA # 132)
10450 SW 184 TERR.
MIAMI, FL. 33157

REV. NO	DESCRIPTION	DATE	REV. No	DESCRIPTION	DATE
1	–	–	3	–	–
2	–	–	4	–	–

AS SHOWN SCALE
5/10/99 DATE
99 – 162 DRAWING No
SHEET 2 OF 9

5/10/99

INSTALLATION DETAILS

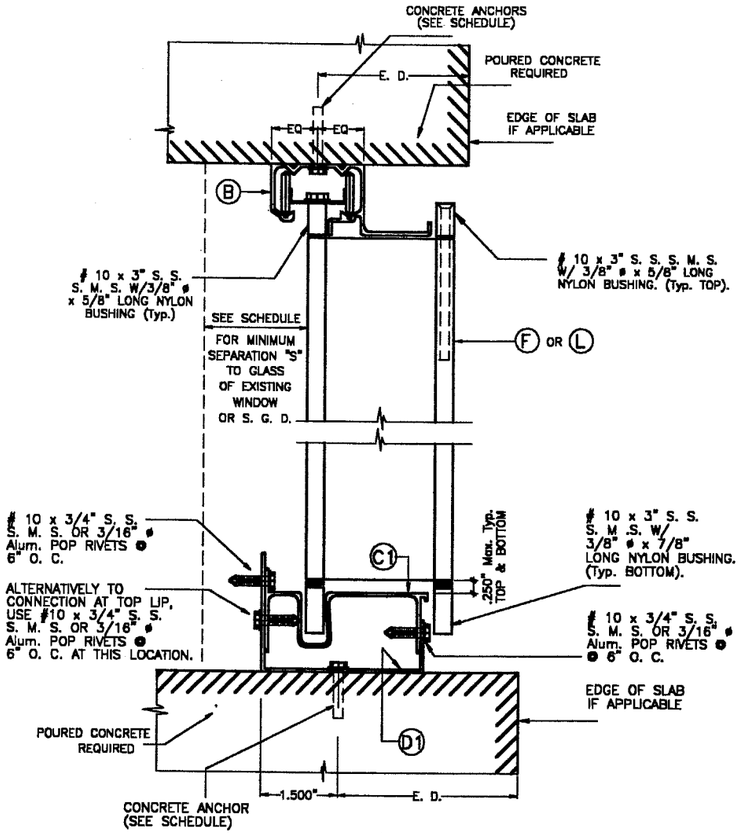

CEILING & FLOOR MOUNTING INSTALLATION – SECTION B'

SCALE: 3/4" = 1"

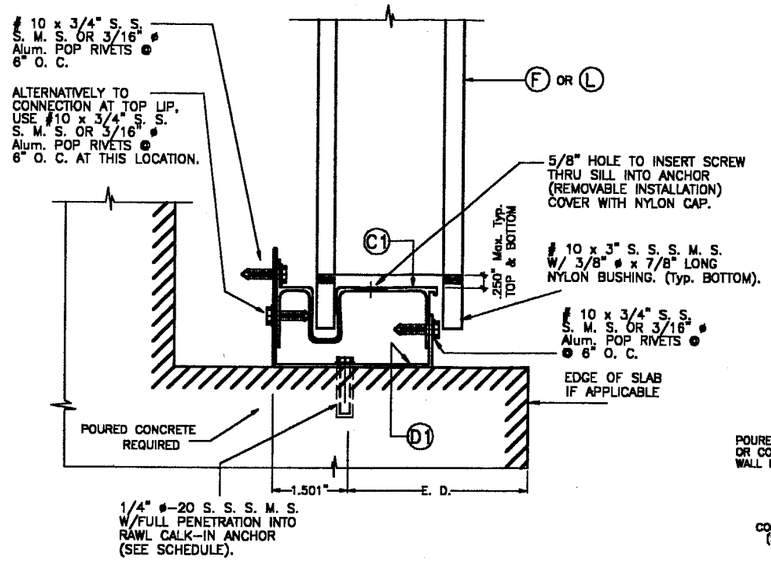

REMOVABLE FLOOR MOUNTING INSTALLATION – SECTION B1'

SCALE: 3/4" = 1"

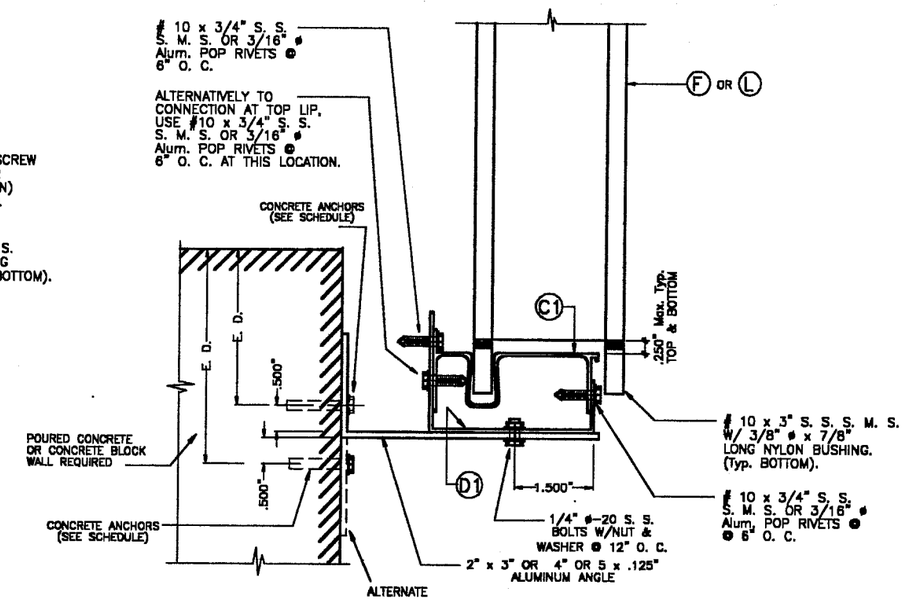

WALL MOUNTING INSTALLATION (OFFSET) – SECTION C1'

SCALE: 3/4" = 1"

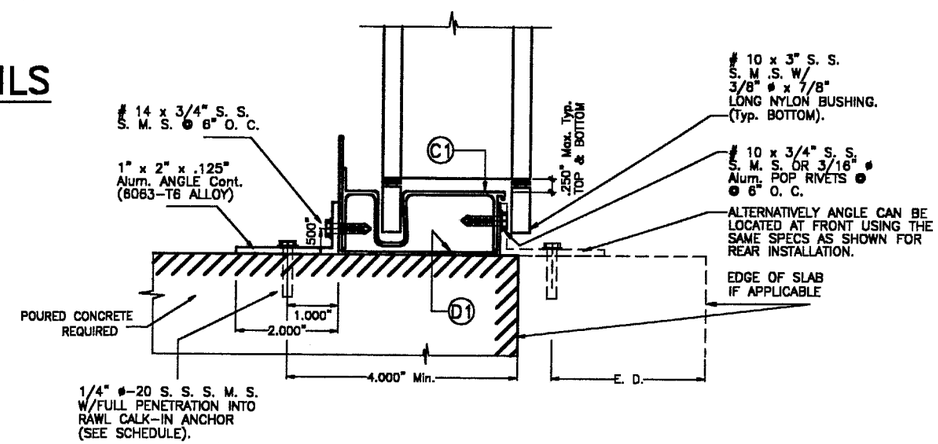

REMOVABLE FLOOR MOUNTING INSTALLATION – SECTION B2'

SCALE: 3/4" = 1"

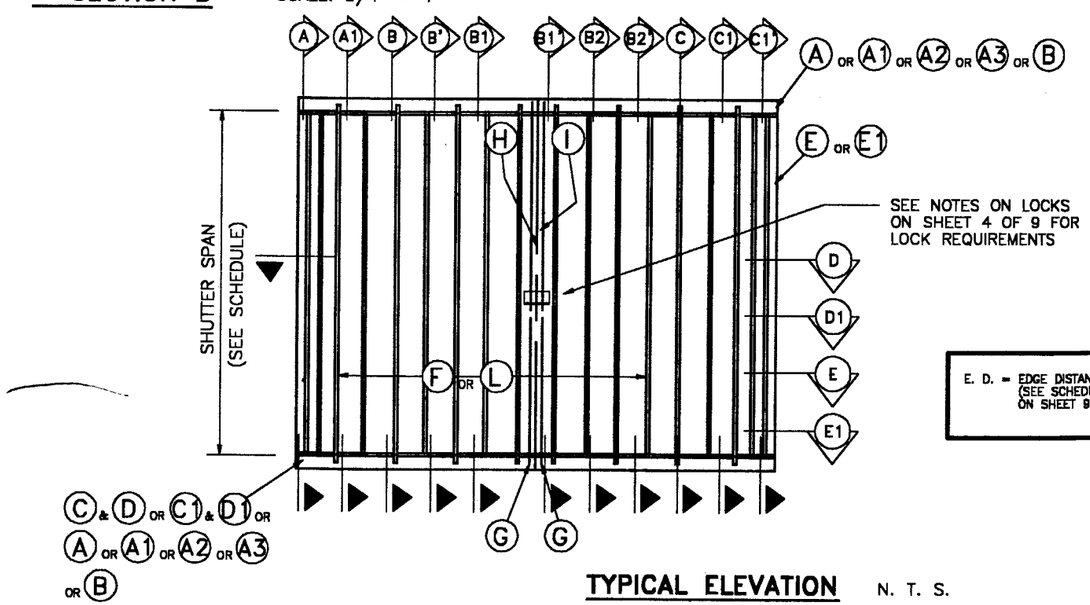

TYPICAL ELEVATION

N. T. S.

E. D. = EDGE DISTANCE (SEE SCHEDULE ON SHEET 9 OF 9)

APPROVED AS COMPLYING WITH THE SOUTH FLORIDA BUILDING CODE
DATE 08/16/2000
BY [signature]
PRODUCT CONTROL DIVISION
BUILDING CODE COMPLIANCE OFFICE
ACCEPTANCE NO. 00-0721.07

DADE COUNTY

[signature]
5/10/99

TILTECO INC.
TILLIT TESTING & ENGINEERING COMPANY
6595 N.W. 36th. St., Ste. 217, VIRGINIA GARDENS, FLORIDA 33166
Phone : (305)871-1530 . Fax : (305)871-1531
WALTER A. TILLIT Jr., P. E.
FLORIDA Lic. # 44167

ASSA / ECONOMY ACCORDION SHUTTER

EZ-LOCK SHUTTERS CO.
(ASSA # 132)
10450 SW 184 TERR.
MIAMI, FL. 33157

REV. NO	DESCRIPTION	DATE	REV. No	DESCRIPTION	DATE
1	–	–	3	–	–
2	–	–	4	–	–

AS SHOWN SCALE

5/10/99 DATE

99 – 162 DRAWING No

SHEET 3 OF 9

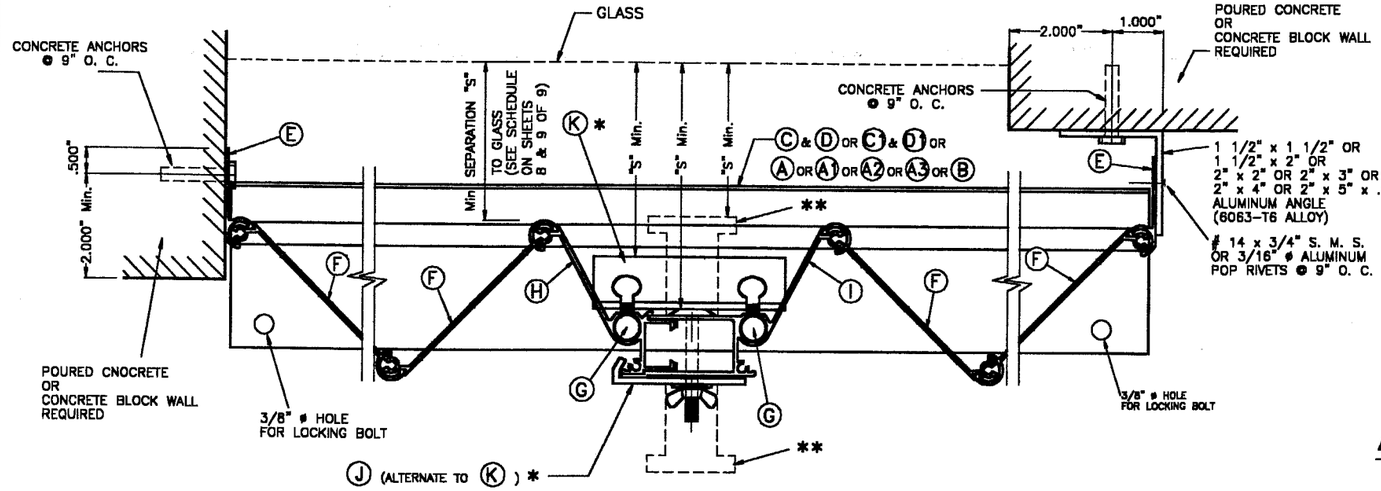

SECTION D

NOTE : SEE NOTES ON LOCKS ON THIS SHEET, VALID ALSO FOR SECTION E1 AND ONE SIDED SHUTTER.

SCALE: 3/4" = 1"

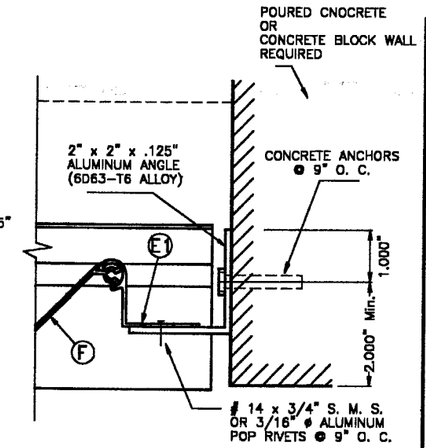

ALTERNATE CLOSURE DETAIL W/ Ⓔ1

SCALE: 3/4" = 1"

NOTES ON LOCKS :

* INSIDE LOCKER Ⓚ OR OUTSIDE LOCKER Ⓙ SHALL ALWAYS BE USED FOR ANY SPAN AT INSTALLATIONS WITHIN THE FIRST 30 FEET OF BUILDING, AND FOR SHUTTER SPANS GREATER THAN 8'-0", FOR INSTALLATIONS ABOVE 30 FEET ELEVATION OF BUILDING MEASURED AT BOTTOM OF SHUTTER.
INSIDE LOCKER Ⓚ SHALL BE ATTACHED TO Ⓗ & Ⓘ BY MEANS OF 2 THUMB SCREWS ONLY WHEN USING Ⓚ LOCKER.
OUTSIDE LOCKER Ⓙ MAY BE USED AS AN INSIDE LOCKER IF ATTACHED TO Ⓗ & Ⓘ W/ 1/4" ø-20 x 1" LONG S. S. THREADED BOLT W/ 1/4" ø-20 x 5/8" INTERNALLY THREADED ALUMINUM RIVNUT. SEE INSTALLATION DETAIL ON THIS SHEET.
OUTSIDE LOCKER Ⓙ SHALL BE ATTACHED THRU Ⓗ & Ⓘ W/ 1/4" ø-20 S. S. SIDEWALK BOLT W/ 7/8" WING NUT OR W/ 1/4" ø-20 x 1" LONG S. S. THREADED BOLT W/ 1/4" ø-20 x 5/8" INTERNALLY THREADED ALUMINUM RIVNUT. SEE INSTALLATION DETAIL ON THIS SHEET.

**
a). FOR INSTALLATIONS WITHIN THE FIRST 30 FEET ELEVATION OF BUILDING MEASURED AT BOTTOM OF SHUTTER AND IN ADDITION TO EITHER Ⓚ OR Ⓙ USED LOCKERS, A REGULAR T LOCK MAY BE USED FOR SECURITY PURPOSES AT ANY DESIRED LOCATION OF CENTERMATE (INSIDE OR OUTSIDE).
WHEN USED INSIDE, MINIMUM SEPARATION TO GLASS SHALL ALSO BE VERIFIED FROM THE TIP OF SUCH T LOCK OR FROM THE OTHER SHUTTER COMPONENTS SHOWN ON SECTION D (WHICHEVER IS MORE CRITICAL).
b). FOR INSTALLATIONS ABOVE 30 FEET ELEVATION OF BUILDING MEASURED AT BOTTOM OF SHUTTER AND SHUTTER SPANS UP TO 8'-0", ONE T LOCK MAY BE USED IN LIEU OF LOCKERS Ⓚ OR Ⓙ AT MIDSPAN OF CENTERMATE FACING OUTSIDE OR INSIDE.
WHEN USED INSIDE, MINIMUM SEPARATION TO GLASS SHALL ALSO BE VERIFIED FROM THE TIP OF SUCH T LOCK OR FROM THE OTHER SHUTTER COMPONENTS SHOWN ON SECTION D (WHICHEVER IS MORE CRITICAL).

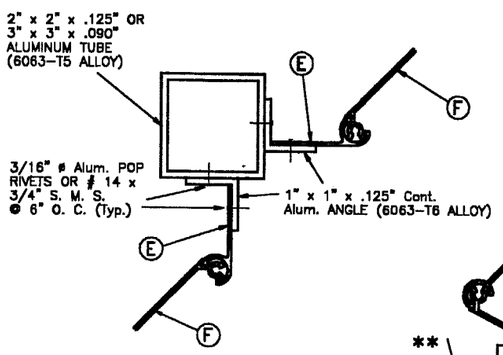

SECTION E

SCALE: 3/4" = 1"

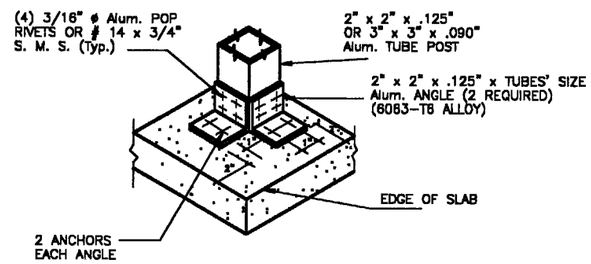

ISOMETRIC (CORNER POST) (Typ. AT TOP & BOTTOM SLABS)

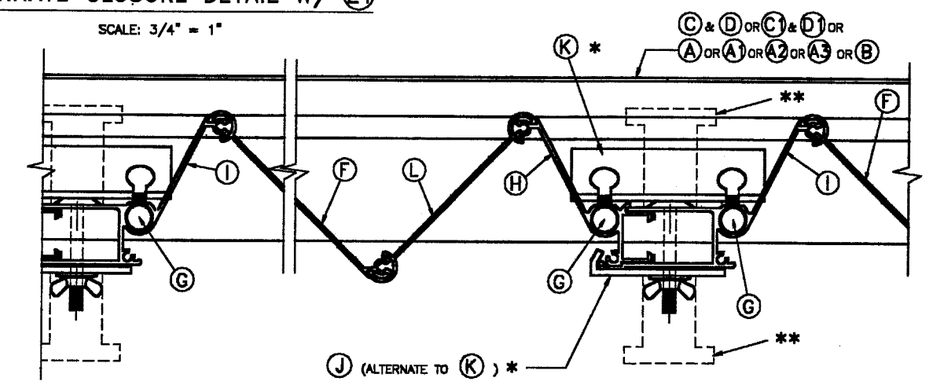

SECTION D1 (MULTIPLE SHUTTERS)

SCALE: 3/4" = 1"

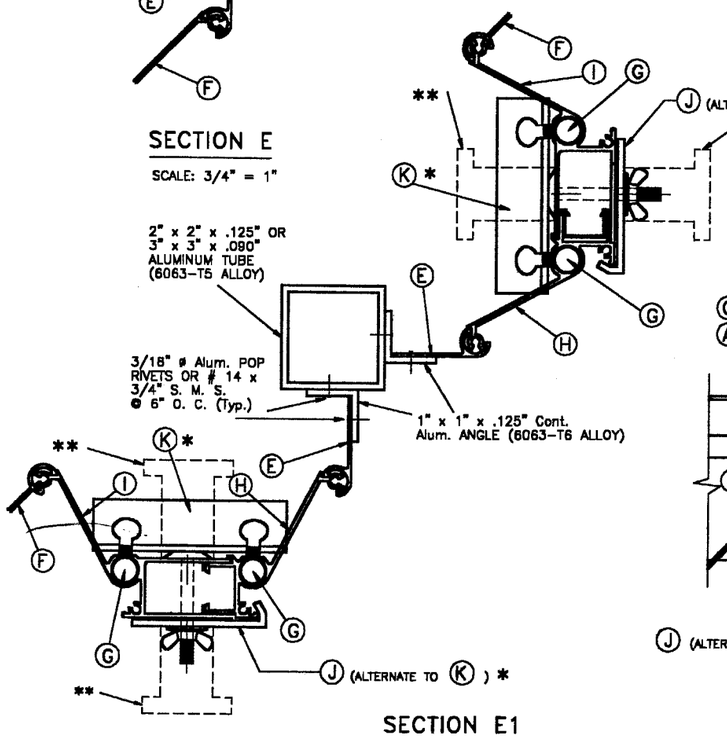

SECTION E1

SCALE: 3/4" = 1"

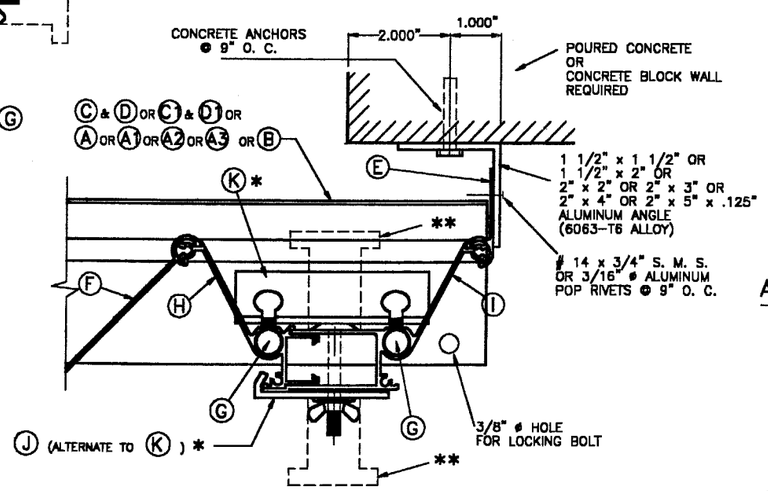

ONE SIDED SHUTTER: END CONNECTION DETAIL

SCALE: 3/4" = 1"

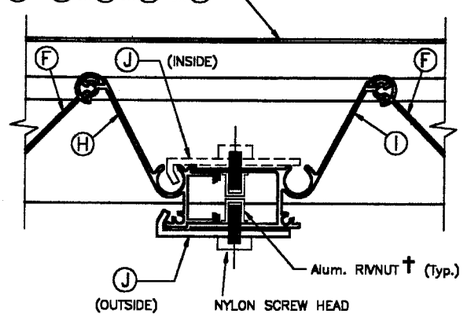

†: SERIES 9444 ALUMINUM (2024-T3 ALLOY) LARGE FLANGE THIN SHEET NUTSERT, PART # 082D, AS MANUFACTURED BY AVDEL CHERRY TEXTORN, PARSIPPENY, NEW JERSEY 07054 OR EQUAL.

ALTERNATE USE OF Ⓙ LOCKER W/ RIVNUT † AS INSIDE OR OUTSIDE LOCKER

SCALE: 3/4" = 1"

APPROVED AS COMPLYING WITH THE SOUTH FLORIDA BUILDING CODE
DATE 08/16/2000
BY Helmy A. Moker
PRODUCT CONTROL DIVISION
BUILDING CODE COMPLIANCE OFFICE
ACCEPTANCE NO. 00-0721.07

DADE COUNTY

TILTECO INC.
TILLIT TESTING & ENGINEERING COMPANY
8595 N.W. 36th. St., Ste. 217, VIRGINIA GARDENS, FLORIDA 33166
Phone : (305)871-1530 . Fax : (305)871-1531
WALTER A. TILLIT Jr., P. E.
FLORIDA Lic. # 44167

3/10/99

ASSA / ECONOMY ACCORDION SHUTTER

EZ-LOCK SHUTTERS CO.
(ASSA # 132)
10450 SW 184 TERR.
MIAMI, FL. 33157

AS SHOWN SCALE
5/10/99 DATE
99 - 162 DRAWING No
SHEET 4 OF 9

REV. NO	DESCRIPTION	DATE	REV. No	DESCRIPTION	DATE
1	-	-	3	-	-
2	-	-	4	-	-

INSTALLATION DETAILS ON EXISTING WOOD BUILDINGS

NOTES:

1. INSTALLATIONS ARE ONLY VALID FOR BUILDINGS WITH DESIGN LOAD UP TO 75.3 p.s.f. AND 9'-0" Max. SHUTTER SPAN.
2. NEW 2" x 6" P. T. TO BE SOUTHERN PINE No. 2, SURFACED DRY WITH 19 % M. C. W/ SPECIFIC DENSITY OF 0.55.
3. FOR NEW WOOD FRAME CONSTRUCTION: WOOD MEMBERS TO BE SOUTHERN PINE No. 2, W/ SPECIFIC DENSITY OF 0.55 OR EQUAL.

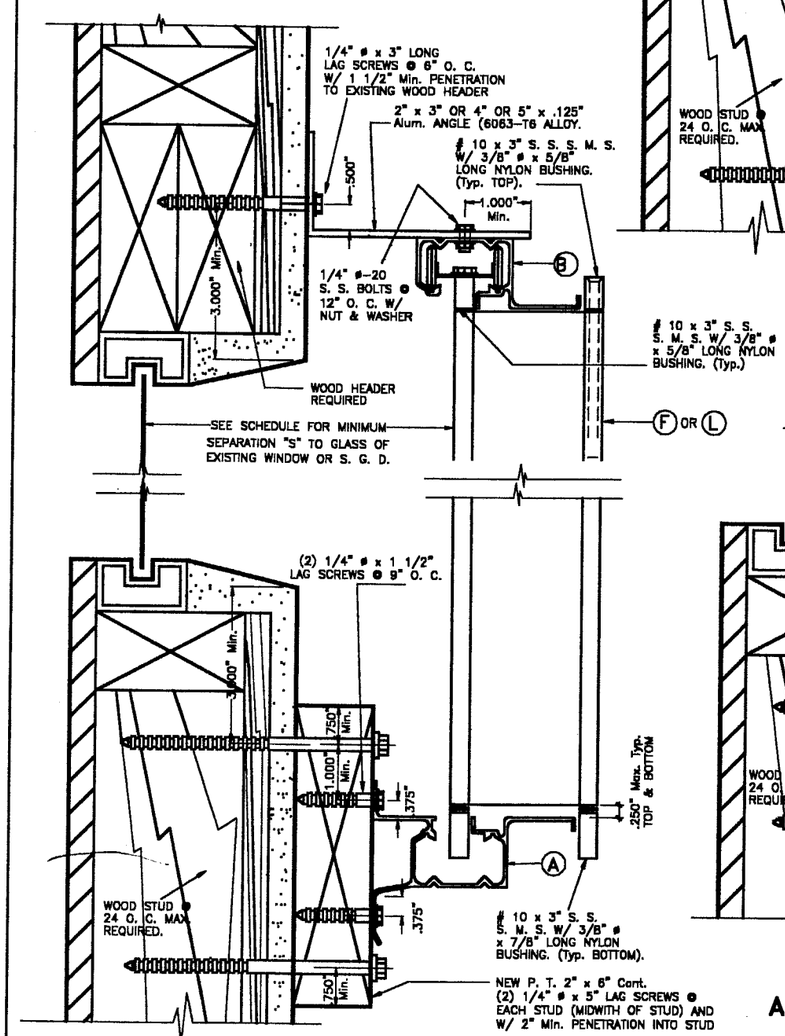

ALTERNATIVE 1

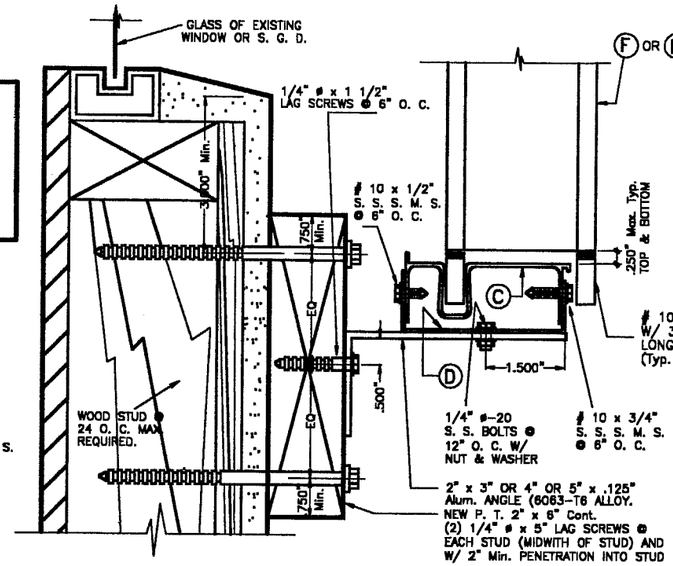

ALTERNATIVE 2

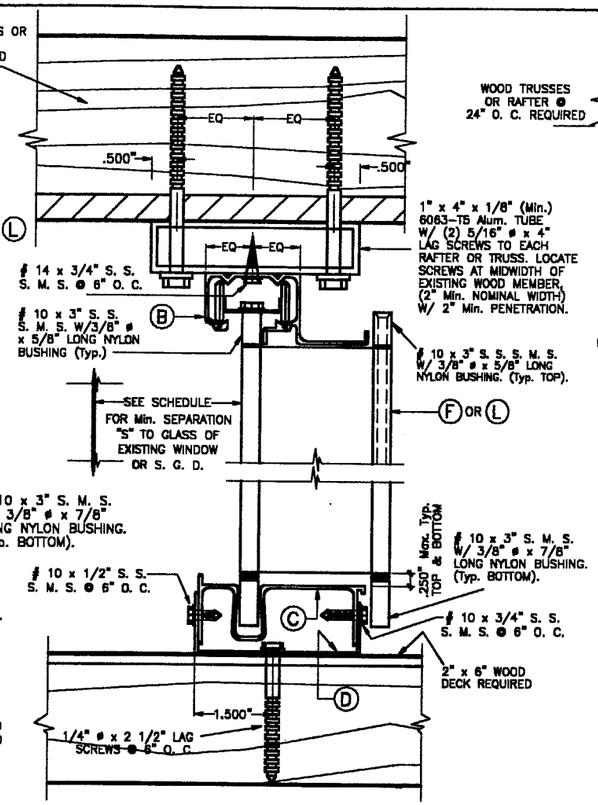

CEILING & FLOOR MOUNTING INSTALLATION – SECTION B

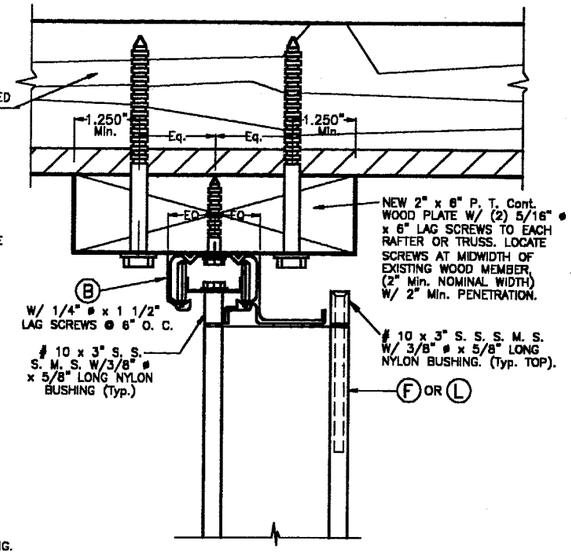

CEILING MOUNTING INSTALLATION – SECTION B1

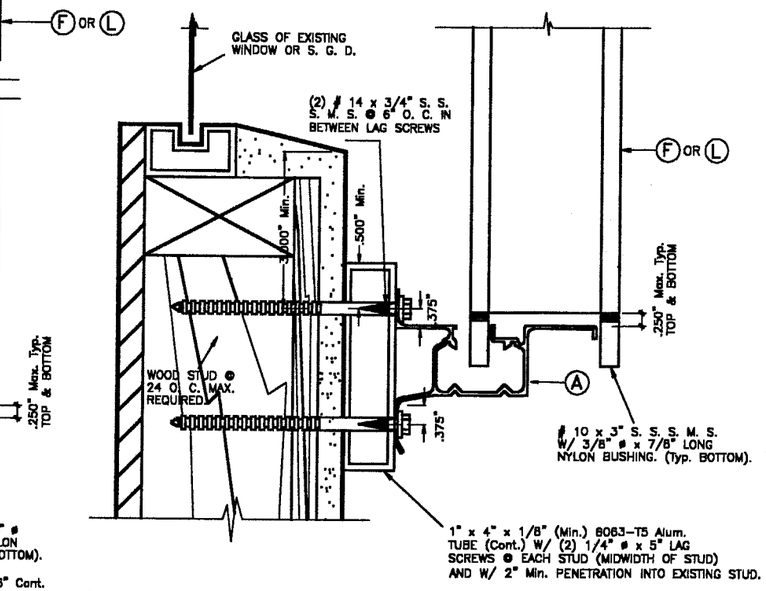

ALTERNATIVE 3

WALL MOUNTING INSTALLATION (OFFSET) – SECTION A

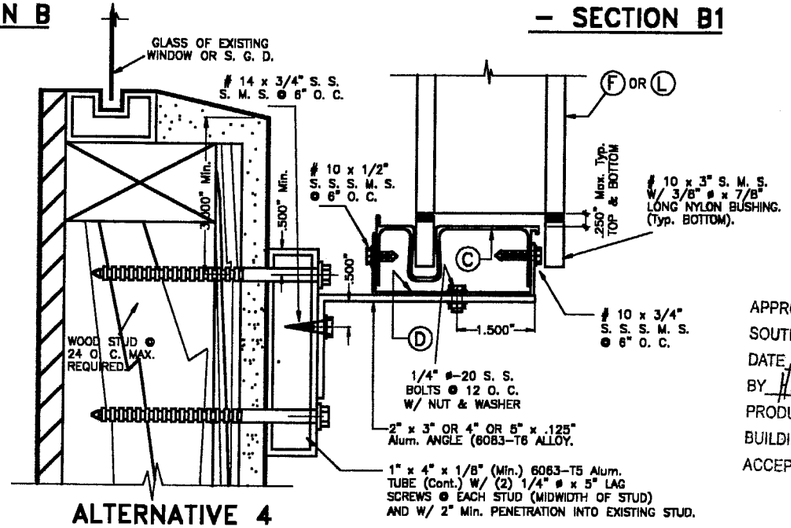

ALTERNATIVE 4

NOTE : SECTIONS B & B1 CAN BE COMBINED AS APPLICABLE.

APPROVED AS COMPLYING WITH THE SOUTH FLORIDA BUILDING CODE
DATE 08/16/2000
BY [signature]
PRODUCT CONTROL DIVISION
BUILDING CODE COMPLIANCE OFFICE
ACCEPTANCE NO. 00-0721.07

DADE COUNTY

TILTECO INC.
TILLIT TESTING & ENGINEERING COMPANY
6585 N.W. 38th. St., Ste. 217, VIRGINIA GARDENS, FLORIDA 33166
Phone : (305)871-1530 . Fax : (305)871-1531
WALTER A. TILLIT Jr., P. E.
FLORIDA Lic. # 44167

ASSA / ECONOMY ACCORDION SHUTTER

EZ-LOCK SHUTTERS CO.
(ASSA # 132)
10450 SW 184 TERR.
MIAMI, FL. 33157

REV. NO	DESCRIPTION	DATE	REV. No	DESCRIPTION	DATE
1	–	–	3	–	–
2	–	–	4	–	–

AS SHOWN SCALE

5/10/99 DATE

99 – 162 DRAWING No

SHEET 5 OF 9

[signature] 5/10/99

INSTALLATION DETAILS ON EXISTING WOOD BUILDINGS

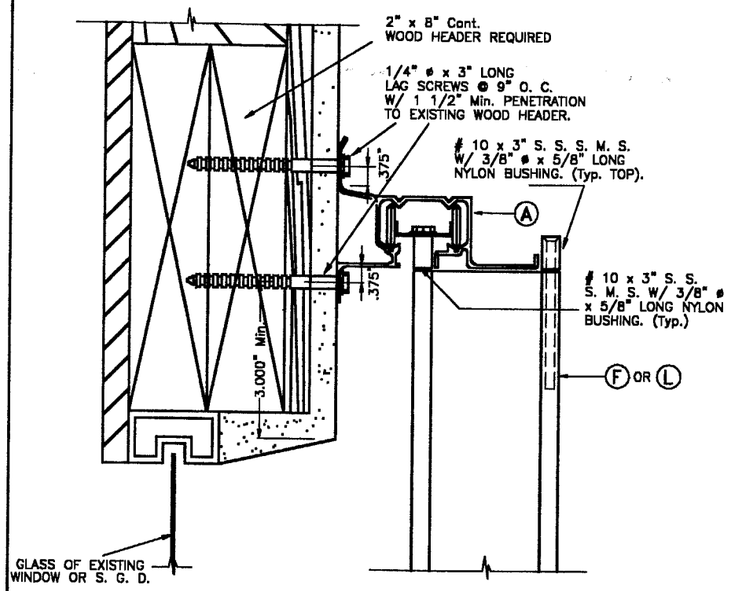

WALL MOUNTING INSTALLATION – SECTION A1

SCALE: 3/4" = 1"

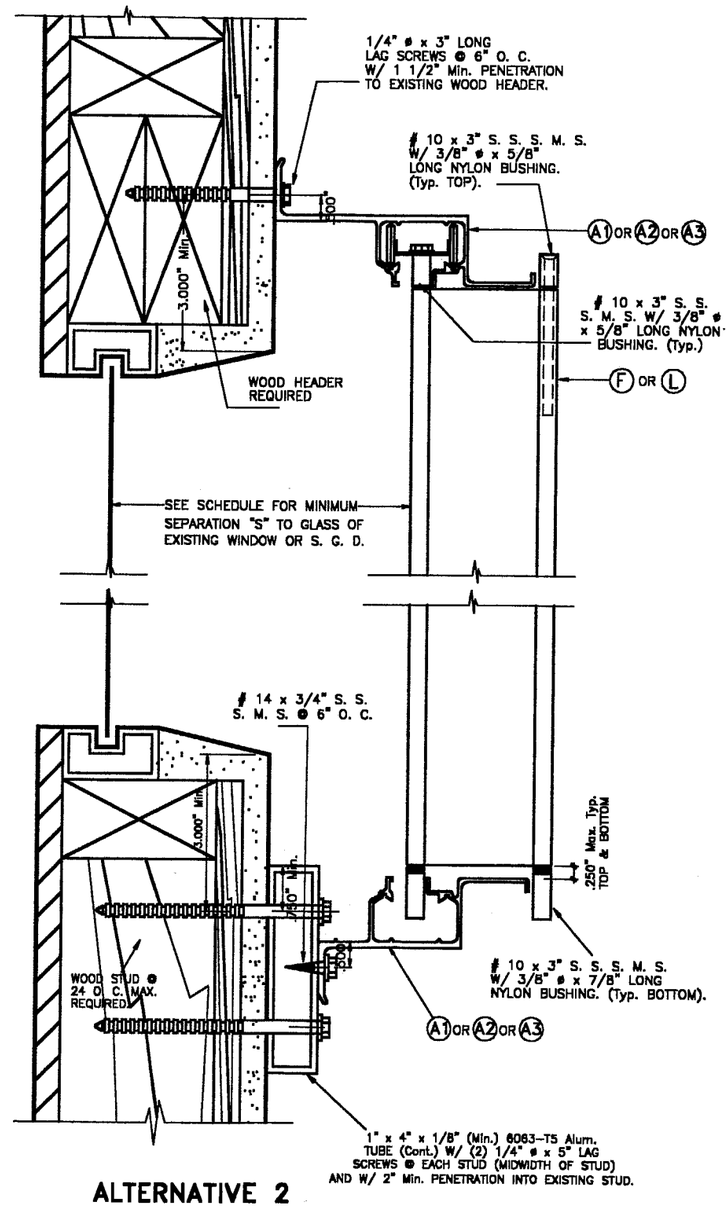

ALTERNATIVE 2

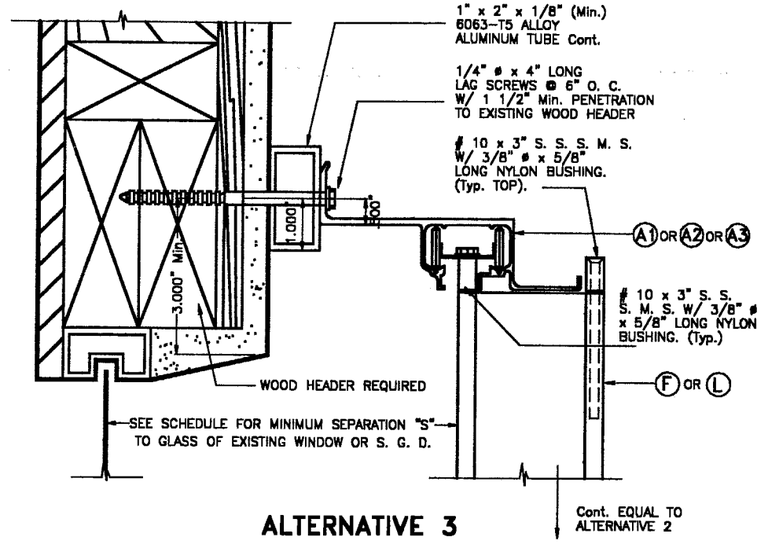

ALTERNATIVE 3

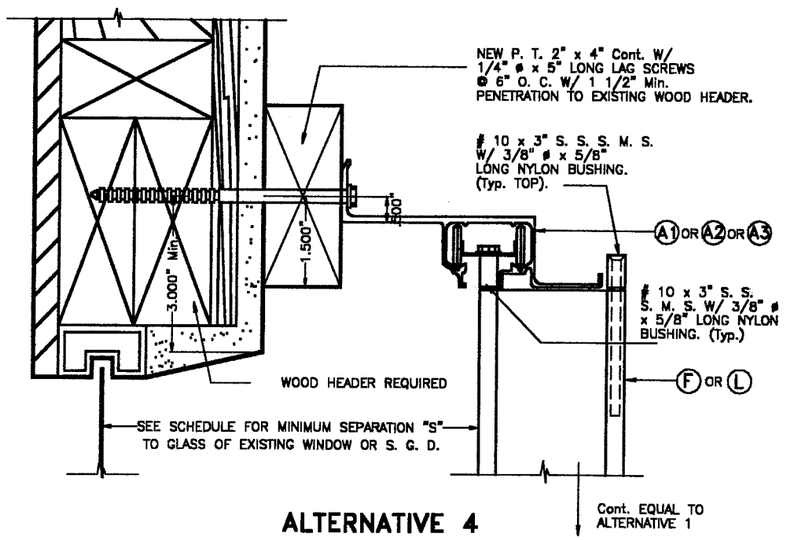

ALTERNATIVE 4

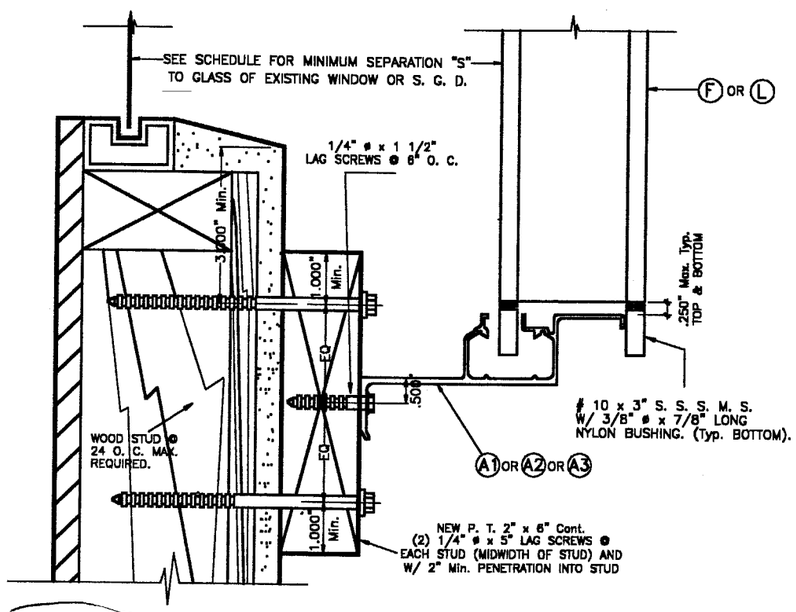

ALTERNATIVE 1

WALL MOUNTING INSTALLATION (OFFSET) – SECTION A2

SCALE: 3/4" = 1"

APPROVED AS COMPLYING WITH THE
SOUTH FLORIDA BUILDING CODE
DATE 08/16/2000
BY [signature]
PRODUCT CONTROL DIVISION
BUILDING CODE COMPLIANCE OFFICE
ACCEPTANCE NO. 00-0721.07
DADE COUNTY

NOTES:

1. INSTALLATIONS ARE ONLY VALID FOR BUILDINGS WITH DESIGN LOAD UP TO 75.3 p.s.f. AND 9'-0" Max. SHUTTER SPAN.
2. NEW 2" x 6" P. T. TO BE SOUTHERN PINE No. 2, SURFACED DRY WITH 19 % M. M. C. W/ SPECIFIC DENSITY OF 0.55.
3. FOR NEW WOOD FRAME CONSTRUCTION: WOOD MEMBERS TO BE SOUTHERN PINE No. 2, W/ SPECIFIC DENSITY OF 0.55 OR EQUAL.

[signature]
3/10/99

TILTECO INC.
TILLIT TESTING & ENGINEERING COMPANY
6595 N.W. 36th. St., Ste. 217, VIRGINIA GARDENS, FLORIDA 33166
Phone : (305)871-1830 : Fax : (305)871-1831
WALTER A. TILLIT Jr., P. E.
FLORIDA Lic. # 44167

ASSA / ECONOMY ACCORDION SHUTTER

EZ-LOCK SHUTTERS CO.
(ASSA # 132)
10450 SW 184 TERR.
MIAMI, FL. 33157

REV. NO	DESCRIPTION	DATE	REV. No	DESCRIPTION	DATE
1	–	–	3	–	–
2	–	–	4	–	–

AS SHOWN SCALE

5/10/99 DATE

99 – 162 DRAWING No

SHEET 6 OF 9

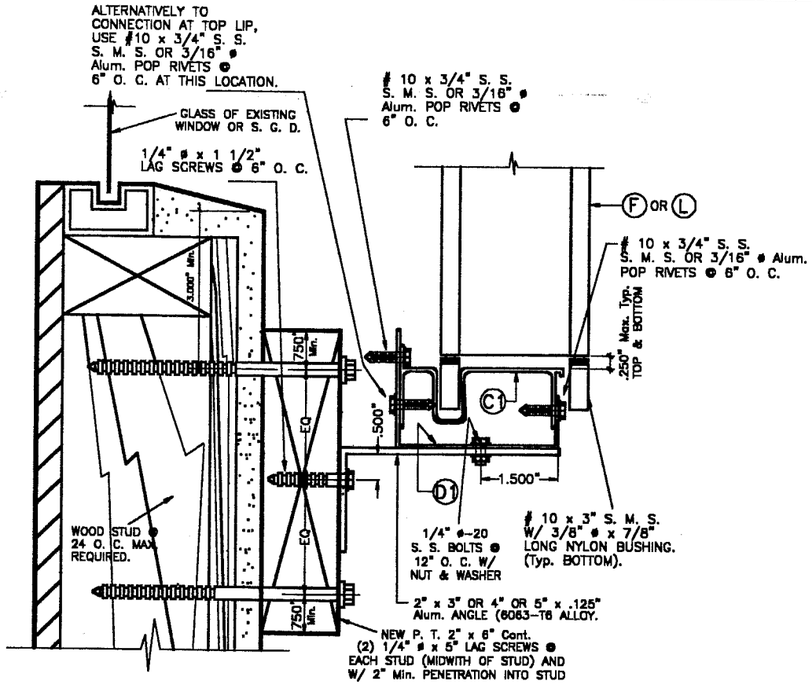

ALTERNATIVE 1

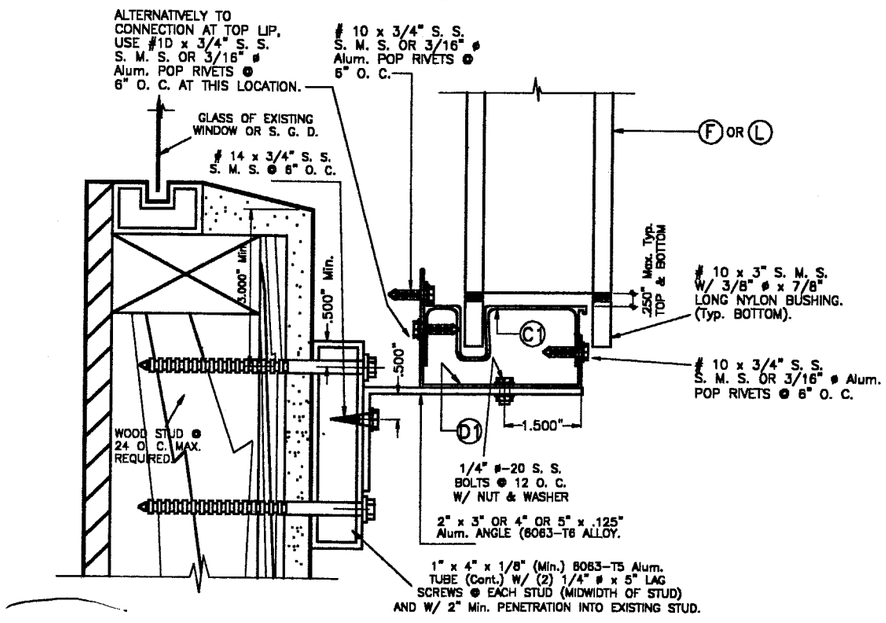

ALTERNATIVE 2

WALL MOUNTING INSTALLATION (OFFSET) – SECTION A'

SCALE: 3/4" = 1"

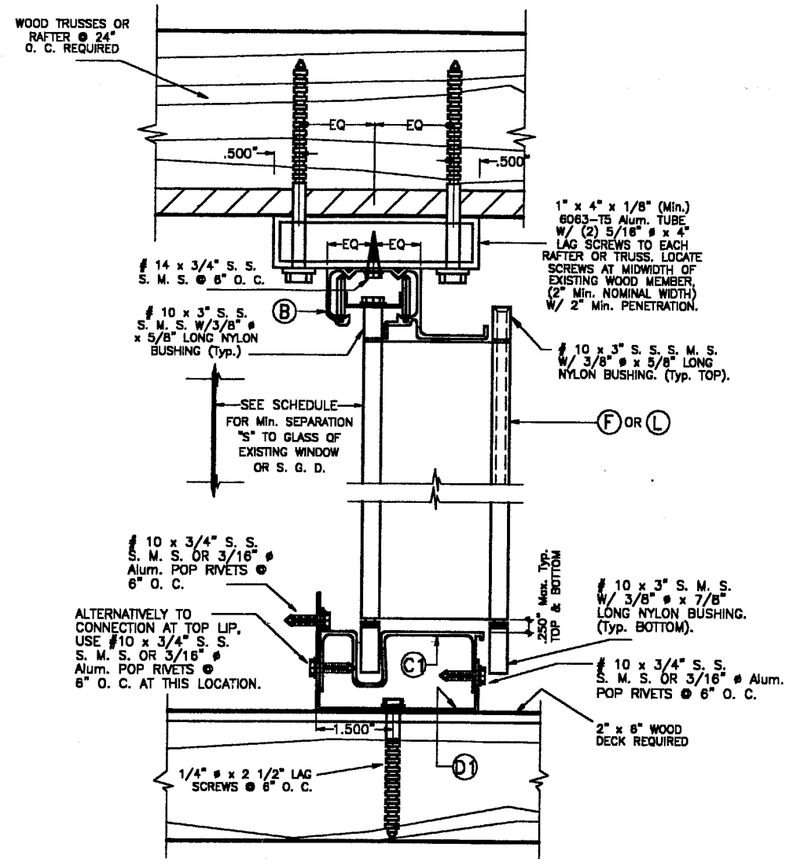

CEILING & FLOOR MOUNTING INSTALLATION – SECTION B'

SCALE: 3/4" = 1"

NOTES:

1. INSTALLATIONS ARE ONLY VALID FOR BUILDINGS WITH DESIGN LOAD UP TO 75.3 p.s.f. AND 9'-0" Max. SHUTTER SPAN.
2. NEW 2" x 6" P. T. TO BE SOUTHERN PINE No. 2, SURFACED DRY WITH 19 % M. M. C. W/ SPECIFIC DENSITY OF 0.55.
3. FOR NEW WOOD FRAME CONSTRUCTION: WOOD MEMBERS TO BE SOUTHERN PINE No. 2, W/ SPECIFIC DENSITY OF 0.55 OR EQUAL.

INSTALLATION DETAILS ON EXISTING WOOD BUILDINGS

APPROVED AS COMPLYING WITH THE SOUTH FLORIDA BUILDING CODE
DATE 08/16/2000
BY [signature]
PRODUCT CONTROL DIVISION
BUILDING CODE COMPLIANCE OFFICE
ACCEPTANCE NO. 00-0721.07

DADE COUNTY

TILTECO INC.
TILLIT TESTING & ENGINEERING COMPANY
8595 N.W. 36th. St., Ste. 217, VIRGINIA GARDENS, FLORIDA 33166
Phone : (305)871-1530 . Fax : (305)871-1531
WALTER A. TILLIT Jr., P. E.
FLORIDA Lic. # 44167

[signature] 5/10/99

ASSA / ECONOMY ACCORDION SHUTTER							AS SHOWN SCALE
EZ-LOCK SHUTTERS CO. (ASSA # 132) 10450 SW 184 TERR. MIAMI, FL. 33157							5/10/99 DATE
							99 – 162 DRAWING No
REV. NO	DESCRIPTION	DATE	REV. No	DESCRIPTION	DATE		
1	–	–	3	–	–		SHEET 7 OF 9
2	–	–	4	–	–		

MAXIMUM DESIGN PRESSURE RATING "W" (p.s.f.) AND CORRESPONDING MAXIMUM SPAN "L" SCHEDULE.

(VALID FOR SECTIONS A, A1, B, B1, B2, C & C1 ON SHEET 2 OF 9).

NOTE: DESIGN PRESSURE RATING CORRESPONDS ONLY TO NEGATIVE PRESSURE (SUCTION) LOADS, IN ACCORDANCE WITH ASCE 7–88 CRITERIA FOR A GIVEN OPENING. IF NEGATIVE PRESSURE VALUES COMPLY WITH THE REQUIRED PRESSURE FOR THE OPENING, THE POSITIVE PRESSURE WILL AUTOMATICALLY QUALIFY AND NEED NOT TO BE CHECKED.

MAXIMUM DESIGN LOAD "W" (p.s.f.)	MAXIMUM PANEL SPAN "L" (ft.)		MINIMUM SEPARATION "S" TO GLASS (in.)	
	*	**	*	**
45.1	12'–0"	13'–0"	4"	2 1/2"
47.8	12'–0"	12'–8"	4"	2 1/2"
49.0	12'–0"	12'–6"	4"	2 1/2"
50.5	12'–0"	12'–4"	4"	2 1/2"
52.0	12'–0"	12'–2"	4"	2 1/2"
52.4	12'–0"	12'–1"	4"	2 1/2"
55.0	11'–10"	11'–10"	4"	2 1/4"
55.2	11'–10"	11'–10"	4"	2 1/4"
55.6	11'–4"	11'–9"	4"	2 1/4"
57.2	11'–4"	11'–7"	4"	2 1/4"
58.6	11'–4"	11'–5"	4"	2 1/4"
58.8	11'–4"	11'–5"	4"	2 1/4"
59.5	11'–4"	11'–4"	4"	2 1/4"
59.7	11'–4"	11'–4"	4"	2 1/8"
61.5	11'–2"	11'–2"	4"	2 1/8"
61.8	11'–1"	11'–1"	4"	2 1/8"
61.9	11'–1"	11'–1"	4"	2 1/8"
63.4	11'–0"	11'–0"	4"	2 1/8"
63.6	11'–0"	11'–0"	4"	2 1/8"
63.7	11'–0"	11'–0"	4"	2 1/8"
66.9	10'–8"	10'–8"	4"	2"
67.0	10'–8"	10'–8"	4"	2"

MAXIMUM DESIGN LOAD "W" (p.s.f.)	MAXIMUM PANEL SPAN "L" (ft.)		MINIMUM SEPARATION "S" TO GLASS (in.)	
	*	**	*	**
67.5	10'–8"	10'–8"	4"	2"
70.1	10'–6"	10'–6"	4"	2"
71.1	10'–5"	10'–5"	4"	2"
71.4	10'–4"	10'–4"	4"	2"
71.5	10'–4"	10'–4"	4"	2"
72.9	10'–3"	10'–3"	4"	2"
75.1	10'–1"	10'–1"	4"	2"
75.2	10'–1"	10'–1"	4"	2"
75.3	10'–1"	10'–1"	4"	2"
77.0	10'–0"	10'–0"	3 1/2"	2"
77.5	9'–11"	9'–11"	3 1/2"	2"
78.8	9'–10"	9'–10"	3 1/2"	2"
80.7	9'–9"	9'–9"	3 1/2"	2"
81.5	9'–8"	9'–8"	3 1/2"	2"
82.5	9'–8"	9'–8"	3 1/2"	2"
83.4	9'–7"	9'–7"	3 1/2"	2"
86.2	9'–5"	9'–5"	3 1/2"	2"
86.7	9'–5"	9'–5"	3 1/2"	2"
86.8	9'–5"	9'–5"	3 1/2"	2"
88.5	9'–4"	9'–4"	3 1/2"	2"
90.3	9'–3"	9'–3"	3 1/2"	2"
90.8	9'–2"	9'–2"	3 1/2"	2"

MAXIMUM DESIGN LOAD "W" (p.s.f.)	MAXIMUM PANEL SPAN "L" (ft.)		MINIMUM SEPARATION "S" TO GLASS (in.)	
	*	**	*	**
91.4	9'–2"	9'–2"	3 1/2"	2"
92.7	9'–1"	9'–1"	3 1/2"	2"
93.8	9'–0"	9'–0"	2 7/8"	2"
94.8	9'–0"	9'–0"	2 7/8"	2"
96.6	8'–11"	6'–11"	2 7/8"	2"
96.8	8'–11"	8'–11"	2 7/8"	2"
97.7	8'–10"	6'–10"	2 7/8"	2"
100.5	8'–9"	8'–9"	2 7/8"	2"
101.5	8'–8"	8'–8"	2 7/8"	2"
103.7	8'–7"	8'–7"	2 7/8"	2"
106.5	8'–6"	8'–6"	2 7/8"	2"
108.8	8'–5"	8'–5"	2 7/8"	2"
110.6	8'–4"	8'–4"	2 7/8"	2"
111.0	8'–4"	8'–4"	2 7/8"	2"
114.1	8'–2"	8'–2"	2 7/8"	2"
116.5	8'–2"	8'–2"	2 7/8"	2"
116.9	8'–1"	8'–1"	2 7/8"	2"
117.6	8'–1"	8'–1"	2 7/8"	2"
119.7	8'–0"	8'–0"	2 7/8"	2"
120.0	8'–0"	8'–0"	2 7/8"	2"
121.2	7'–10"	7'–10"	2 7/8"	2"
122.5	7'–9"	7'–9"	2 7/8"	2"

MAXIMUM DESIGN LOAD "W" (p.s.f.)	MAXIMUM PANEL SPAN "L" (ft.)		MINIMUM SEPARATION "S" TO GLASS (in.)	
	*	**	*	**
125.3	7'–7"	7'–7"	2 7/8"	2"
125.8	7'–6"	7'–6"	2 7/8"	2"
126.7	7'–6"	7'–6"	2 7/8"	2"
129.6	7'–4"	7'–4"	2 7/8"	2"
130.9	7'–3"	7'–3"	2 7/8"	2"
131.6	7'–2"	7'–2"	2 7/8"	2"
134.3	7'–1"	7'–1"	2 7/8"	2"
136.2	6'–11"	6'–11"	2 7/8"	2"
137.9	6'–10"	6'–10"	2 7/8"	2"
140.7	6'–9"	6'–9"	2 7/8"	2"
142.8	6'–7"	6'–7"	2 7/8"	2"
143.5	6'–7"	6'–7"	2 7/8"	2"
147.0	6'–5"	6'–5"	2 7/8"	2"
148.4	6'–4"	6'–4"	2 7/8"	2"
152.6	6'–2"	6'–2"	2 7/8"	2"
153.1	6'–2"	6'–2"	2 7/8"	2"
156.8	6'–0"	6'–0"	2 7/8"	2"
157.5	6'–0"	6'–0"	2 7/8"	2"
157.8	6'–0"	6'–0"	2 7/8"	2"
160.8	5'–11"	5'–11"	2 7/8"	2"
161.7	5'–10"	5'–10"	2 7/8"	2"
164.4	5'–9"	5'–9"	2 7/8"	2"

MAXIMUM DESIGN LOAD "W" (p.s.f.)	MAXIMUM PANEL SPAN "L" (ft.)		MINIMUM SEPARATION "S" TO GLASS (in.)	
	*	**	*	**
165.2	5'–9"	5'–9"	2 7/8"	2"
168.1	5'–8"	5'–8"	2 7/8"	2"
168.7	5'–7"	5'–7"	2 7/8"	2"
170.0	5'–7"	5'–7"	2 7/8"	2"
175.6	5'–5"	5'–5"	2 7/8"	2"
176.6	5'–4"	5'–4"	2 7/8"	2"
180.3	5'–3"	5'–3"	2 7/8"	2"
188.0	5'–0"	5'–0"	2 7/8"	2"
195.2	4'–10"	4'–10"	2 7/8"	2"
197.2	4'–10"	4'–10"	2 7/8"	2"
199.1	4'–9"	4'–9"	2 7/8"	2"
204.7	4'–7"	4'–7"	2 7/8"	2"
211.3	4'–6"	4'–6"	2 7/8"	2"
216.9	4'–4"	4'–4"	2 7/8"	2"
221.6	4'–3"	4'–3"	2 7/8"	2"
226.3	4'–2"	4'–2"	2 7/8"	2"

MAXIMUM DESIGN PRESSURE RATING "W" (p.s.f.) AND CORRESPONDING MAXIMUM ANCHOR SPACING (in.) SCHEDULE. +

(VALID FOR SECTIONS A, A1, B, B1, B2, C & C1 ON SHEET 2 OF 9).

MAXIMUM DESIGN LOAD "W" (p.s.f.)	WALL MOUNTING INSTALLATION AT TOP OR BOTTOM (TO CONCRETE)			WALL MOUNTING INSTALLATION AT TOP OR BOTTOM (TO MASONRY)			FLOOR/CEILING MOUNTING INSTALLATION TOP OR BOTTOM (TO CONCRETE)		
	NOTE 1	NOTE 2	NOTE 3	NOTE 1	NOTE 2	NOTE 3	NOTE 1	NOTE 2	NOTE 3
FROM 45.1 TO 61.8	9"	9"	9"	9"	9"	4 1/2"	9"	9"	8"
	9"	9"	7"	7"	7"	5"	9"	7"	5"
FROM 61.9 TO 75.3	9"	9"	8 1/2"	9"	8"	2 1/2"	9"	9"	7"
	9"	9"	4 1/2"	9"	7"	3"	9"	5 1/2"	4 1/2"
FROM 75.4 TO 91.4	9"	9"	6"	9"	3"	–	9"	7 1/2"	6 1/2"
FROM 91.5 TO 120.0	9"	4 1/2"	4 1/2"	8"	–	–	9"	5 1/2"	5 1/2"
FROM 120.1 TO 168.1	7 1/2"	4 1/2"	–	2 1/2"	–	–	7"	5 1/2"	–
FROM 168.2 TO 226.3	4 1/2"	4 1/2"	–	2" *	–	–	5 1/2"	5 1/2"	–

* VALID FOR UP TO 3'–0" MAXIMUM SPAN.

ANCHOR SPACING LEGEND

(1) Max. ANCHOR SPCG. VALID FOR SPANS OF 5'–0" OR LESS.
(2) Max. ANCHOR SPCG. VALID FOR SPANS GREATER THAN 5'–0" TO 8'–6".
(3) Max. ANCHOR SPCG. VALID FOR SPANS GREATER THAN 8'–6" TO Max. ALLOWED.

\+ USE TAPCON ANCHORS, ZAMAC NAILIN & RAWL CALK–INS FOR INSTALLATIONS W/ DESIGN LOADS UP TO 75.3 p.s.f.
USE ONLY TAPCON ANCHORS & RAWL CALK–INS FOR INSTALLATIONS W/ DESIGN LOADS GREATER THAN 75.3 p.s.f.
MAXIMUM ANCHOR SPACINGS ARE VALID FOR 3" EDGE DISTANCE.
FOR E. D. LESS THAN 3", REDUCE ANCHOR SPACING BY MULTIPLYING SPACINGS SHOWN ON SCHEDULE BY THE FOLLOWING FACTORS. (NOTE : Min. E. D. FOR RAWL CALK–IN ANCHORS IS 2 1/2").

ACTUAL E. D.= EDGE DISTANCE	FACTOR
2 1/2"	.75
2"	.50

TAPCON OR RAWL CALK–IN	TAPCON OR RAWL CALK–IN
ZAMAC NAILIN	
UP TO 75.3 p.s.f.	> 75.3 p.s.f. TO 226.3 p.s.f.

ANCHOR LEGENDS

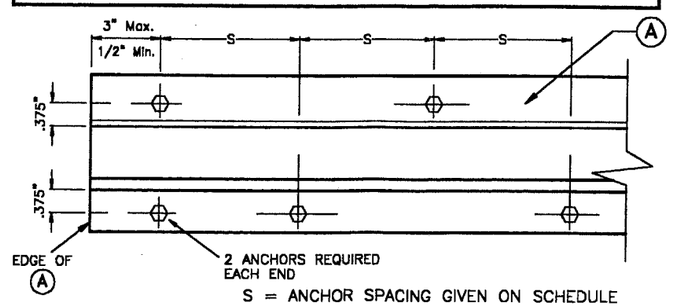

S = ANCHOR SPACING GIVEN ON SCHEDULE

STAGGERED ANCHORS

ANCHORS USED W/TRACK "A" (TOP & BOTTOM) SHALL BE INSTALLED STAGGERED AT Max. SPACINGS INDICATED ON SCHEDULES.

TABLE 1:

MINIMUM SEPARATION "S" BETWEEN GLASS AND SHUTTER FOR A GIVEN SHUTTER SPAN "L", FOR SHUTTERS INSTALLED WITHIN THE FIRST 30'–0" ABOVE GRADE OF A GIVEN BUILDING. 30'–0" ELEVATION SHALL BE MEASURED AT BOTTOM OF SHUTTER. SEPARATION "S" TO BE MEASURED AS INDICATED ON SECTION D, SHEET 4 OF 9.

SHUTTER SPAN "L" (ft.)	MINIMUM SEPARATION "S" (in.)
LESS OR EQUAL THAN 9'–0"	2 7/8"
> 9'–0" TO 10'–0"	3 1/2"
> 10'–0" TO 12'–0"	4"

* FOR SHUTTERS INSTALLED WITHIN THE FIRST 30'–0" ELEVATION OF BUILDING.
SEE TABLE 1 FOR MINIMUM SEPARATION TO GLASS FOR SPANS SHORTER THAN THE MAXIMUM ALLOWED SHOWN ON SCHEDULE.

** FOR SHUTTERS INSTALLED ABOVE 30'–0" ELEVATION OF BUILDING, MEASURED AT BOTTOM OF SHUTTER.

APPROVED AS COMPLYING WITH THE SOUTH FLORIDA BUILDING CODE
DATE 08/16/2000
BY Helmy H. Moh
PRODUCT CONTROL DIVISION
BUILDING CODE COMPLIANCE OFFICE
ACCEPTANCE NO. 00-0721.07

DADE COUNTY

TILTECO INC.
TILLIT TESTING & ENGINEERING COMPANY
8595 N.W. 36th. St., Ste. 217, VIRGINIA GARDENS, FLORIDA 33166
Phone : (305)871–1530 . Fax : (305)871–1531
WALTER A. TILLIT Jr., P. E.
FLORIDA Lic. # 44167

ASSA / ECONOMY ACCORDION SHUTTER

EZ-LOCK SHUTTERS CO.
(ASSA # 132)
10450 SW 184 TERR.
MIAMI, FL. 33157

REV. NO	DESCRIPTION	DATE	REV. No	DESCRIPTION	DATE
1	–	–	3	–	–
2	–	–	4	–	–

AS SHOWN SCALE
5/10/99 DATE
99 – 162 DRAWING No
SHEET 8 OF 9

5/10/99

MAXIMUM DESIGN PRESSURE RATING "W" (p.s.f.) AND CORRESPONDING MAXIMUM SPAN "L" SCHEDULE.

(VALID FOR SECTIONS B', B1', B2' & C1' ON SHEET 3 OF 9).

NOTE: DESIGN PRESSURE RATING CORRESPONDS ONLY TO NEGATIVE PRESSURE (SUCTION) LOADS, IN ACCORDANCE WITH ASCE 7–88 CRITERIA FOR A GIVEN OPENING. IF NEGATIVE PRESSURE VALUES COMPLY WITH THE REQUIRED PRESSURE FOR THE OPENING, THE POSITIVE PRESSURE WILL AUTOMATICALLY QUALIFY AND NEED NOT TO BE CHECKED.

MAXIMUM DESIGN LOAD "W" (p.s.f.)	MAXIMUM PANEL SPAN "L" (ft.)		MINIMUM SEPARATION "S" TO GLASS (in.)	
	*	**	*	**
45.1	12'–0"	13'–3"	4"	3"
47.8	12'–0"	13'–1"	4"	3"
49.0	12'–0"	13'–0"	4"	3"
50.5	12'–0"	12'–11"	4"	3"
52.0	12'–0"	12'–10"	4"	3"
52.4	12'–0"	12'–10"	4"	3"
55.0	12'–0"	12'–7"	4"	3"
55.2	12'–0"	12'–7"	4"	3"
55.6	12'–0"	12'–6"	4"	3"
57.2	12'–0"	12'–4"	4"	2 7/8"
58.6	12'–0"	12'–2"	4"	2 7/8"
58.8	12'–0"	12'–2"	4"	2 7/8"
59.5	12'–0"	12'–1"	4"	2 7/8"
59.7	12'–0"	12'–1"	4"	2 7/8"
61.5	11'–11"	11'–11"	4"	2 3/4"
61.8	11'–10"	11'–10"	4"	2 3/4"
61.9	11'–10"	11'–10"	4"	2 3/4"
63.4	11'–9"	11'–9"	4"	2 3/4"
63.6	11'–8"	11'–8"	4"	2 3/4"
63.7	11'–8"	11'–8"	4"	2 3/4"
66.9	11'–5"	11'–5"	4"	2 3/4"
67.0	11'–5"	11'–5"	4"	2 3/4"

MAXIMUM DESIGN LOAD "W" (p.s.f.)	MAXIMUM PANEL SPAN "L" (ft.)		MINIMUM SEPARATION "S" TO GLASS (in.)	
	*	**	*	**
67.5	11'–4"	11'–4"	4"	2 1/2"
70.1	11'–2"	11'–2"	4"	2 1/2"
71.1	11'–1"	11'–1"	4"	2 1/2"
71.4	11'–0"	11'–0"	4"	2 1/2"
71.5	11'–0"	11'–0"	4"	2 1/2"
72.9	10'–11"	10'–11"	4"	2 1/2"
75.1	10'–9"	10'–9"	4"	2 1/2"
75.2	10'–9"	10'–9"	4"	2 1/2"
75.3	10'–9"	10'–9"	4"	2 1/2"
77.0	10'–8"	10'–8"	4"	2 1/2"
77.5	10'–7"	10'–7"	4"	2 3/8"
78.8	10'–6"	10'–6"	4"	2 3/8"
80.7	10'–5"	10'–5"	4"	2 3/8"
81.5	10'–4"	10'–4"	4"	2 3/8"
82.5	10'–3"	10'–3"	4"	2 3/8"
83.4	10'–3"	10'–3"	4"	2 3/8"
86.2	10'–0"	10'–0"	3 1/2"	2 3/8"
86.7	10'–0"	10'–0"	3 1/2"	2 3/8"
86.8	10'–0"	10'–0"	3 1/2"	2 3/8"
88.5	9'–11"	9'–11"	3 1/2"	2 1/4"
90.3	9'–10"	9'–10"	3 1/2"	2 1/4"
90.8	9'–10"	9'–10"	3 1/2"	2 1/4"

MAXIMUM DESIGN LOAD "W" (p.s.f.)	MAXIMUM PANEL SPAN "L" (ft.)		MINIMUM SEPARATION "S" TO GLASS (in.)	
	*	**	*	**
91.4	9'–9"	9'–9"	3 1/2"	2 1/4"
92.7	9'–6"	9'–8"	3 1/2"	2 1/4"
93.8	9'–8"	9'–8"	3 1/2"	2 1/4"
94.8	9'–7"	9'–7"	3 1/2"	2 1/4"
95.6	9'–6"	9'–6"	3 1/2"	2 1/4"
96.8	9'–6"	9'–6"	3 1/2"	2 1/8"
97.7	9'–5"	9'–5"	3 1/2"	2 1/8"
100.5	9'–4"	9'–4"	3 1/2"	2 1/8"
101.5	9'–3"	9'–3"	3 1/2"	2 1/8"
103.7	9'–2"	9'–2"	3 1/2"	2 1/8"
106.5	9'–0"	9'–0"	2 1/2"	2 1/8"
108.8	8'–11"	8'–11"	2 1/2"	2 1/8"
110.6	8'–11"	8'–11"	2 1/2"	2 1/8"
111.0	8'–10"	8'–10"	2 1/2"	2"
114.1	8'–9"	8'–9"	2 1/2"	2"
116.5	8'–7"	8'–7"	2 1/2"	2"
116.9	8'–6"	8'–6"	2 1/2"	2"
117.6	8'–6"	8'–6"	2 1/2"	2"
119.7	8'–4"	8'–4"	2 1/2"	2"
120.0	8'–4"	6'–4"	2 1/2"	2"
121.2	8'–3"	6'–3"	2 1/2"	2"
122.5	8'–2"	8'–2"	2 1/2"	2"

MAXIMUM DESIGN LOAD "W" (p.s.f.)	MAXIMUM PANEL SPAN "L" (ft.)		MINIMUM SEPARATION "S" TO GLASS (in.)	
	*	**	*	**
125.3	8'–0"	8'–0"	2 1/2"	2"
125.8	7'–11"	7'–11"	2 1/2"	2"
126.7	7'–11"	7'–11"	2 1/2"	2"
129.6	7'–8"	7'–8"	2 1/2"	2"
130.9	7'–8"	7'–8"	2 1/2"	2"
131.6	7'–7"	7'–7"	2 1/2"	2"
134.3	7'–5"	7'–5"	2 1/2"	2"
136.2	7'–4"	7'–4"	2 1/2"	2"
137.9	7'–3"	7'–3"	2 1/2"	2"
140.7	7'–1"	7'–1"	2 1/2"	2"
142.8	7'–0"	7'–0"	2 1/2"	2"
143.5	6'–11"	6'–11"	2 1/2"	2"
147.0	6'–10"	6'–10"	2 1/2"	2"
148.4	6'–9"	6'–9"	2 1/2"	2"
152.6	6'–6"	6'–6"	2 1/2"	2"
153.1	6'–6"	6'–6"	2 1/2"	2"
156.6	6'–4"	6'–4"	2 1/2"	2"
157.5	6'–4"	6'–4"	2 1/2"	2"
157.6	6'–4"	6'–4"	2 1/2"	2"
160.6	6'–2"	6'–2"	2 1/2"	2"
161.7	6'–2"	6'–2"	2 1/2"	2"
164.4	6'–1"	6'–1"	2 1/2"	2"

MAXIMUM DESIGN LOAD "W" (p.s.f.)	MAXIMUM PANEL SPAN "L" (ft.)		MINIMUM SEPARATION "S" TO GLASS (in.)	
	*	**	*	**
165.2	6'–0"	6'–0"	2 1/2"	2"
168.1	5'–11"	5'–11"	2 1/2"	2"
168.7	5'–11"	5'–11"	2 1/2"	2"
170.0	5'–10"	5'–10"	2 1/2"	2"
175.6	5'–8"	5'–8"	2 1/2"	2"
176.6	5'–8"	5'–8"	2 1/2"	2"
180.3	5'–6"	5'–6"	2 1/2"	2"
188.0	5'–4"	5'–4"	2 1/2"	2"
195.2	5'–1"	5'–1"	2 1/2"	2"
197.2	5'–1"	5'–1"	2 1/2"	2"
199.1	5'–0"	5'–0"	2 1/2"	2"
204.7	4'–11"	4'–11"	2 1/2"	2"
211.3	4'–9"	4'–9"	2 1/2"	2"
216.9	4'–7"	4'–7"	2 1/2"	2"
221.6	4'–6"	4'–6"	2 1/2"	2"
226.3	4'–5"	4'–5"	2 1/2"	2"

MAXIMUM DESIGN PRESSURE RATING "W" (p.s.f.) AND CORRESPONDING MAXIMUM ANCHOR SPACING (in.) SCHEDULE. +

(VALID FOR SECTIONS B', B1', B2' & C1' ON SHEET 3 OF 9).

MAXIMUM DESIGN LOAD "W" (p.s.f.)	WALL MOUNTING INSTALLATION AT TOP OR BOTTOM (TO CONCRETE)			WALL MOUNTING INSTALLATION AT TOP OR BOTTOM (TO MASONRY)			FLOOR/CEILING MOUNTING INSTALLATION TOP OR BOTTOM (TO CONCRETE)		
	NOTE 1	NOTE 2	NOTE 3	NOTE 1	NOTE 2	NOTE 3	NOTE 1	NOTE 2	NOTE 3
FROM 45.1 TO 61.8	9"	9"	9"	9"	9"	4 1/2"	9"	9"	8"
	9"	9"	7"	7"	7"	5"	9"	7"	5"
FROM 61.9 TO 75.3	9"	9"	8 1/2"	9"	8"	2 1/2"	9"	9"	7"
	9"	9"	4 1/2"	9"	7"	3"	9"	5 1/2"	4 1/2"
FROM 75.4 TO 91.4	9"	9"	6"	9"	3"	–	9"	7 1/2"	6 1/2"
FROM 91.5 TO 120.0	9"	4 1/2"	4 1/2"	8"	–	–	9"	5 1/2"	5 1/2"
FROM 120.1 TO 168.1	7 1/2"	4 1/2"	–	2 1/2"	–	–	7"	5 1/2"	–
FROM 168.2 TO 226.3	4 1/2"	4 1/2"	–	2" *	–	–	5 1/2"	5 1/2"	–

* VALID FOR UP TO 3'–0" MAXIMUM SPAN.

ANCHOR SPACING LEGEND

(1) Max. ANCHOR SPCG. VALID FOR SPANS OF 5'–0" OR LESS.
(2) Max. ANCHOR SPCG. VALID FOR SPANS GREATER THAN 5'–0" TO 8'–6".
(3) Max. ANCHOR SPCG. VALID FOR SPANS GREATER THAN 8'–6" TO Max. ALLOWED.

\+ USE TAPCON ANCHORS, ZAMAC NAILIN & RAWL CALK–INS FOR INSTALLATIONS W/ DESIGN LOADS UP TO 75.3 p.s.f.
USE ONLY TAPCON ANCHORS & RAWL CALK–INS FOR INSTALLATIONS W/ DESIGN LOADS GREATER THAN 75.3 p.s.f.
MAXIMUM ANCHOR SPACINGS ARE VALID FOR 3" EDGE DISTANCE.
FOR E. D. LESS THAN 3", REDUCE ANCHOR SPACING BY MULTIPLYING SPACINGS SHOWN ON SCHEDULE BY THE FOLLOWING FACTORS. (NOTE : Min. E. D. FOR RAWL CALK–IN ANCHORS IS 2 1/2").

ACTUAL E. D.= EDGE DISTANCE	FACTOR
2 1/2"	.75
2"	.50

TAPCON OR RAWL CALK–IN / ZAMAC NAILIN	TAPCON OR RAWL CALK–IN
UP TO 75.3 p.s.f.	> 75.3 p.s.f. TO 226.3 p.s.f.

ANCHOR LEGENDS

TABLE 1:

MINIMUM SEPARATION "S" BETWEEN GLASS AND SHUTTER FOR A GIVEN SHUTTER SPAN "L", FOR SHUTTERS INSTALLED WITHIN THE FIRST 30'–0" ABOVE GRADE OF A GIVEN BUILDING. 30'–0" ELEVATION SHALL BE MEASURED AT BOTTOM OF SHUTTER. SEPARATION "S" TO BE MEASURED AS INDICATED ON SECTION D, SHEET 4 OF 9.

SHUTTER SPAN "L" (ft.)	MINIMUM SEPARATION "S" (in.)
LESS OR EQUAL THAN 9'–0"	2 1/2"
> 9'–0" TO 10'–0"	3 1/2"
> 10'–0" TO 12'–0"	4"

* FOR SHUTTERS INSTALLED WITHIN THE FIRST 30'–0" ELEVATION OF BUILDING. SEE TABLE 1 FOR MINIMUM SEPARATION TO GLASS FOR SPANS SHORTER THAN THE MAXIMUM ALLOWED SHOWN ON SCHEDULE.

** FOR SHUTTERS INSTALLED ABOVE 30'–0" ELEVATION OF BUILDING, MEASURED AT BOTTOM OF SHUTTER.

APPROVED AS COMPLYING WITH THE SOUTH FLORIDA BUILDING CODE
DATE 08/16/2000
BY [signature]
PRODUCT CONTROL DIVISION
BUILDING CODE COMPLIANCE OFFICE
ACCEPTANCE NO. 00–0721.07

DADE COUNTY

TILTECO INC.
TILLIT TESTING & ENGINEERING COMPANY
8595 N.W. 38th. St., Ste. 217, VIRGINIA GARDENS, FLORIDA 33166
Phone : (305)871–1530 . Fax : (305)871–1531
WALTER A. TILLIT Jr., P. E.
FLORIDA Lic. # 44167

[signature]
5/10/99

ASSA / ECONOMY ACCORDION SHUTTER

EZ–LOCK SHUTTERS CO.
(ASSA # 132)
10450 SW 184 TERR.
MIAMI, FL. 33157

REV. NO	DESCRIPTION	DATE	REV. No	DESCRIPTION	DATE
1	–	–	3	–	–
2	–	–	4	–	–

AS SHOWN SCALE
5/10/99 DATE
99 – 162 DRAWING No
SHEET 9 OF 9