MIAMI-DADE COUNTY, FLORIDA
METRO-DADE FLAGLER BUILDING

BUILDING CODE COMPLIANCE OFFICE
METRO-DADE FLAGLER BUILDING
140 WEST FLAGLER STREET, SUITE 1603
MIAMI, FLORIDA 33130-1563
(305) 375-2901 FAX (305) 375-2908

CONTRACTOR LICENSING SECTION
(305) 375-2527 FAX (305) 375-2558

CONTRACTOR ENFORCEMENT DIVISION
(305) 375-2966 FAX (305) 375-2908

PRODUCT CONTROL DIVISION
(305) 375-2902 FAX (305) 372-6339

PRODUCT CONTROL NOTICE OF ACCEPTANCE

Ocean Shutters Manufacturing, Inc.
4900-B N.E. 11th Avenue
Fort Lauderdale ,FL 33334

Your application for Notice of Acceptance (NOA) of:
0.063" Aluminum Storm Panel
under Chapter 8 of the Code of Miami-Dade County governing the use of Alternate Materials and Types of Construction, and completely described herein, has been recommended for acceptance by the Miami-Dade County Building Code Compliance Office (BCCO) under the conditions specified herein.

This NOA shall not be valid after the expiration date stated below. BCCO reserves the right to secure this product or material at any time from a jobsite or manufacturer's plant for quality control testing. If this product or material fails to perform in the approved manner, BCCO may revoke, modify, or suspend the use of such product or material immediately. BCCO reserves the right to revoke this approval, if it is determined by BCCO that this product or material fails to meet the requirements of the South Florida Building Code.

The expense of such testing will be incurred by the manufacturer.

ACCEPTANCE NO.: 00-0726.04
EXPIRES: 08/07/2003

Raul Rodriguez
Chief Product Control Division

THIS IS THE COVERSHEET, SEE ADDITIONAL PAGES FOR SPECIFIC AND GENERAL CONDITIONS
BUILDING CODE & PRODUCT REVIEW COMMITTEE

This application for Product Approval has been reviewed by the BCCO and approved by the Building Code and Product Review Committee to be used in Miami-Dade County, Florida under the conditions set forth above.

Francisco J. Quintana, R.A.
Director
Miami-Dade County
Building Code Compliance Office

APPROVED: 08/24/2000

Ocean Shutters Manufacturing, Inc.

ACCEPTANCE No. : 00-0726.04

APPROVED : 08/24/2000

EXPIRES : 08/07/2003

NOTICE OF ACCEPTANCE: SPECIFIC CONDITIONS

1. SCOPE

This **renews** the Notice of Acceptance, No. 98-0114.01, which was issued on May 28, 1998. It approves a 0.063" aluminum storm panel shutter, as described in Section 2 of this Notice of Acceptance, designed to comply with the South Florida Building Code, 1994 Edition for Miami-Dade County, for the locations where the pressure requirements, as determined by SFBC Chapter 23, do not exceed the Design Pressure Rating values indicated in the approved drawings.

2. PRODUCT DESCRIPTION

This 0.063" aluminum storm panel shutter and its components shall be constructed in strict compliance with the following documents: Drawing No. 96-202, titled " 0.063" Aluminum Storm Panel", prepared by Knezevich & Associates, Inc., dated October 30, 1997, last revision #3 dated January 7, 1998, sheets 1 through 4 of 4, bearing the Miami-Dade County Product Control Approval and Renewal stamps with the Notice of Acceptance numbers and approval dates by the Miami-Dade County Product Control Division. These documents shall hereinafter be referred to as the approved drawings.

3. LIMITATIONS

All permanent set components, included but not limited to embedded anchor bolts, threaded cones, metal shields, headers and sills, must be protected against corrosion, contamination and damage at all times.

4. INSTALLATION

This 0.063" aluminum storm panel shutter and its components shall be installed in strict compliance with the approved drawings.

5. LABELING

Each panel shall bear a permanent label with the manufacturer's name or logo, city, state and the following statement: "Miami-Dade County Product Control Approved".

6. BUILDING PERMIT REQUIREMENTS

6.1 Application for building permit shall be accompanied by copies of the following:

- **6.1.1** This Notice of Acceptance.
- **6.1.2** Duplicate copies of the approved drawings, as identified in Section 2 of this Notice of Acceptance, clearly marked to show the components selected for the proposed installation.
- **6.1.3** Any other documents required by the Building Official or the South Florida Building Code (SFBC) in order to properly evaluate the installation of this system.

Helmy A. Makar, P.E.- Product Control Examiner
Product Control Division

Ocean Shutters Manufacturing, Inc.

ACCEPTANCE No. : 00-0726.04

APPROVED : 08/24/2000

EXPIRES : 08/07/2003

NOTICE OF ACCEPTANCE: STANDARD CONDITIONS

1 Renewal of this Acceptance (approval) shall be considered after a renewal application has been filed and the original submitted documents, including test-supporting data, engineering documents, are no older than eight (8) years.

2. Any and all approved products shall be permanently labeled with the manufacturer's name, city, state, and the following statement: "Miami-Dade County Product Control Approved", or as specifically stated in the specific conditions of this Acceptance.

3. Renewals of Acceptance will not be considered if:
   a. There has been a change in the South Florida Building Code affecting the evaluation of this product and the product is not in compliance with the code changes.
   b. The product is no longer the same product (identical) as the one originally approved.
   c. If the Acceptance holder has not complied with all the requirements of this acceptance, including the correct installation of the product.
   d. The engineer, who originally prepared, signed and sealed the required documentation initially submitted, is no longer practicing the engineering profession.

4. Any revision or change in the materials, use, and/or manufacture of the product or process shall automatically be cause for termination of this Acceptance, unless prior written approval has been requested (through the filing of a revision application with appropriate fee) and granted by this office.

5. Any of the following shall also be grounds for removal of this Acceptance:
   a. Unsatisfactory performance of this product or process.
   b. Misuse of this Acceptance as an endorsement of any product, for sales, advertising or any other purposes.

6. The Notice of Acceptance number preceded by the words Miami-Dade County, Florida, and followed by the expiration date may be displayed in advertising literature. If any portion of the Notice of Acceptance is displayed, then it shall be done in its entirety.

7. A copy of this Acceptance as well as approved drawings and other documents, where it applies, shall be provided to the user by the manufacturer or its distributors and shall be available for inspection at the job site at all times. The engineer needs not reseal the copies.

8. Failure to comply with any section of this Acceptance shall be cause for termination and removal of Acceptance.

9. This Notice of Acceptance consists of pages 1, 2 and this last page 3.

END OF THIS ACCEPTANCE

Helmy A. Makar

Helmy A. Makar, P.E.- Product Control Examiner
Product Control Division

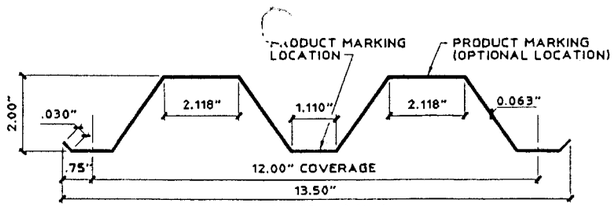

FULL PANEL

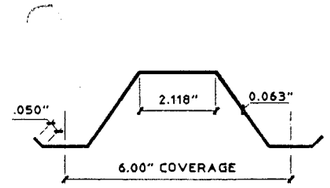

HALF PANEL

1 STORM PANEL

SCALE : 3" = 1'-0"

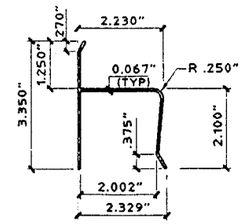

2 "h" HEADER

SCALE : 3" = 1'-0"

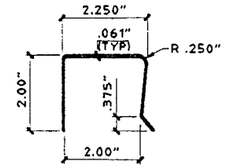

3 "U" HEADER

SCALE : 3" = 1'-0"

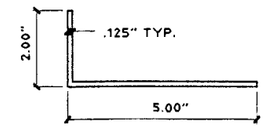

4 ANGLE

SCALE : 3" = 1'-0"

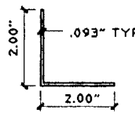

5 ANGLE

SCALE : 3" = 1'-0"

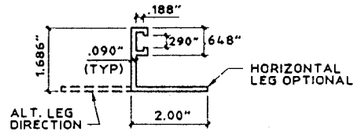

7 "E" TRACK

SCALE : 3" = 1'-0"

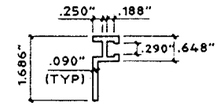

7b ALT. "F" TRACK

SCALE : 3" = 1'-0"

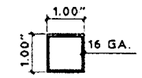

9 STEEL TUBE

SCALE : 3" = 1'-0"

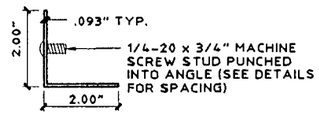

6 STUDDED ANGLE

SCALE : 3" = 1'-0"

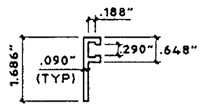

7a "F" TRACK

SCALE : 3" = 1'-0"

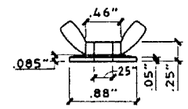

8 WINGNUT

SCALE : HALF SIZE
ZAMAC 3 ALLOY

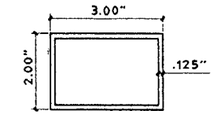

10 ALUM. TUBE

SCALE : 3" = 1'-0"

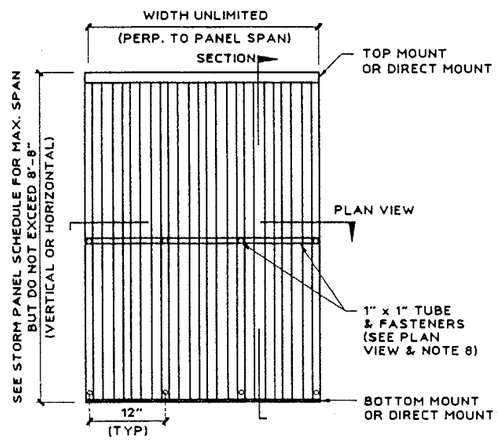

11 TYPICAL ELEVATION

OVERLAP FASTENERS AND STEEL TUBE REQUIRED W/ STUDS @ 12" TOP &/OR BOTTOM OR DIRECT MOUNTS W/ ANCHORS @ 6" OR 12" O.C. TOP & BOTTOM.

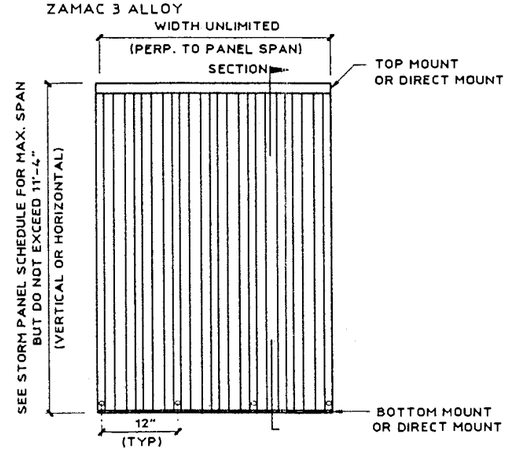

12 TYPICAL ELEVATION

W/ NO OVERLAP FASTENERS OR STEEL TUBE, STUDS @ 12" O.C. TOP &/OR BOTTOM OR DIRECT MOUNTS W/ ANCHORS @ 6" OR 12" O.C. TOP & BOTTOM AS INDICATED IN ANCHOR SCHEDULE.

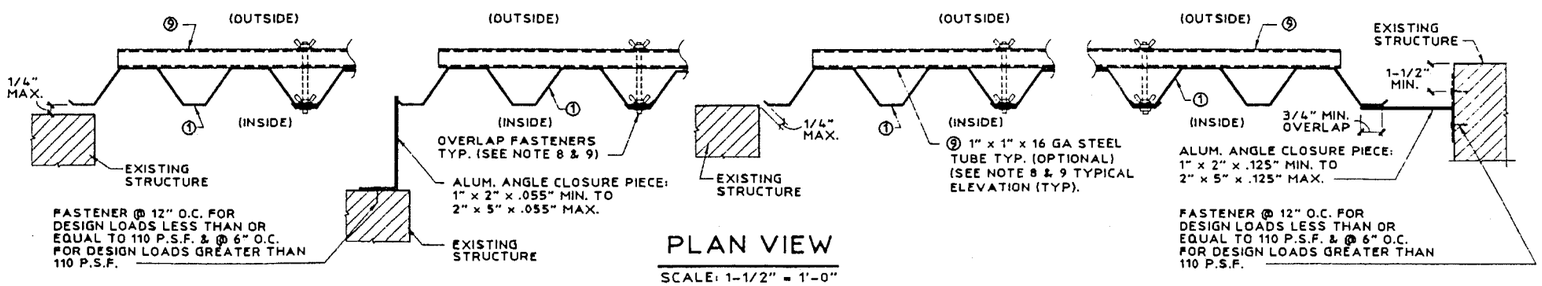

PLAN VIEW

SCALE: 1-1/2" = 1'-0"

GENERAL NOTES:

1. THIS STORM PANEL SYSTEM IS DESIGNED IN ACCORDANCE WITH THE SOUTH FLORIDA BUILDING CODE, 1994 EDITION.
2. POSITIVE AND NEGATIVE DESIGN PRESSURE CALCULATIONS SHALL BE PERFORMED FOR SPECIFIC JOBS IN ACCORDANCE WITH ASCE 7-88 "MINIMUM DESIGN LOADS FOR BUILDINGS AND OTHER STRUCTURES". TABLES SHALL BE REFERENCED AT APPROPRIATE DESIGN LOADS.
3. STORM PANELS SHALL BE 5052-H32 ALUMINUM ALLOY 0.063" THICK, WITH A MIN. Fy (BEFORE ROLLING) OF 26 KSI. EXTRUSIONS SHOWN SHALL BE 6063-T6, ALUMINUM ALLOY, U.O.N.
4. PRODUCT MARKINGS SHALL BE WITHIN 12" OF ONE END OF THE PANEL WITH A MIN OF ONE MARKING PER PANEL AND SHALL BE LABELED AS FOLLOWS:

   OCEAN SHUTTERS MFG INC.
   FT. LAUDERDALE, FL
   DADE COUNTY PRODUCT CONTROL APPROVED
5. ALL BOLTS AND WASHERS SHALL BE GALVANIZED OR STAINLESS STEEL WITH A MINIMUM TENSILE STRENGTH OF 60 KSI.
6. MATERIAL SPECIFICATIONS NOTED HEREIN ARE THE MANUFACTURER'S REPRESENTATION OF MATERIALS USED IN PRODUCT TESTING.
7. TOP & BOTTOM DETAILS SHOWN MAY BE INTERCHANGED AS FIELD CONDITIONS DICTATE. PANELS MAY BE MOUNTED HORIZONTALLY WHERE APPLICABLE.
8. STEEL TUBE SHALL BE USED ON PANELS LESS THAN OR EQUAL TO 104". WHERE SEPARATION FROM GLASS IS LESS THAN 2-5/8" BUT GREATER THAN OR EQUAL TO 2-3/8". PANELS SHALL BE FASTENED AT OVERLAPS AT MIDSPAN TO STEEL TUBE (9) WITH 1/4-20 x 3-1/2" BOLTS W/ ZAMAC 3 ALLOY WASHERED WINGNUTS OR JACKNUTS (SEE TYPICAL ELEVATION (11)). SEE "MINIMUM SEPARATION FROM GLASS SCHEDULE" - COLUMN 1.
9. THE DETAILS AND SPECIFICATIONS SHOWN HEREIN REPRESENT THE PRODUCTS TESTED FOR IMPACT, CYCLIC AND UNIFORM STATIC AIR PRESSURE TESTING IN CONFORMANCE WITH DADE COUNTY PROTOCOLS PA 201,202, AND 203. DESIGN IS BASED ON CONSTRUCTION TESTING CORPORATION TEST REPORT 95-023.
10. AT LEAST ONE WARNING NOTE PER OPENING SHALL BE PLACED IN A CONSPICUOUS LOCATION ON ANY OF THE COMPONENTS OF THE STORM PANEL SYSTEM ADVISING THE HOME OWNER OR TENANT THAT "THE STORM PANELS WILL NOT OFFER HURRICANE PROTECTION UNLESS ALL REINFORCING BOLTS OR TUBES W/ BOLTS ARE PROPERLY INSTALLED, WHEN REQUIRED."

PRODUCT RENEWED

ACCEPTANCE No. 00-0726.04

EXPIRATION DATE 08/07/2003

By [signature]
PRODUCT CONTROL DIVISION
BUILDING CODE COMPLIANCE OFFICE

APPROVED AS COMPLYING WITH THE SOUTH FLORIDA BUILDING CODE

DATE MAY 28 1998

BY [signature]

PRODUCT CONTROL DIVISION

BUILDING CODE COMPLIANCE OFFICE

ACCEPTANCE NO. 98-0114.01

JAN 07 1998

KNEZEVICH & ASSOCIATES, INC.
CONSULTING ENGINEERS • PRODUCT TESTING
641 MOKENA DRIVE·MIAMI SPRINGS, FLORIDA 33166
MIAMI (305) 883-9571 FT. LAUDERDALE (954) 677-9500
FAX: (305) 883-9572

COPYRIGHT 1998 KNEZEVICH & ASSOCIATES, INC.

#98-0114.01

0.063" ALUMINUM STORM PANEL

4900B N.E. 11th AVE.
FT. LAUDERDALE, FL 33334
(954) 489-9797

Ocean Shutters MANUFACTURING, INC.

revisions

no	date	by	description
1	5/21/97	JP	COUNTY COMMENTS
2	7/1/97	JP	COUNTY COMMENTS
3	1/7/98	VJK	COUNTY COMMENTS

V.J. KNEZEVICH
PROFESSIONAL ENGINEER
FL License No
PE 0010983

date 10/30/97	
scale AS NOTED	drawn by GG
design by VJK	checked by VJK
drawing no 96-202	
sheet 1 of 4	

01/07/98 10:04

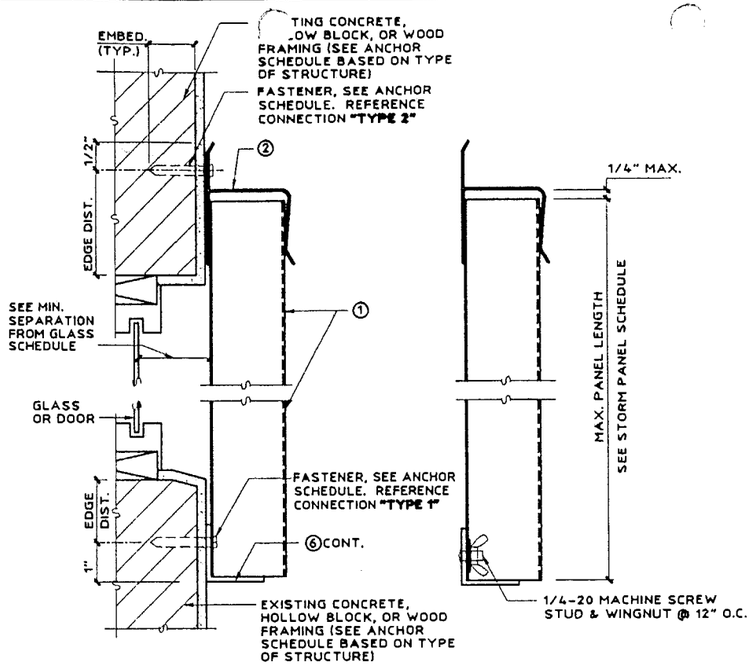

Ⓐ WALL MOUNT SECTION

SCALE : 3" = 1'-0"

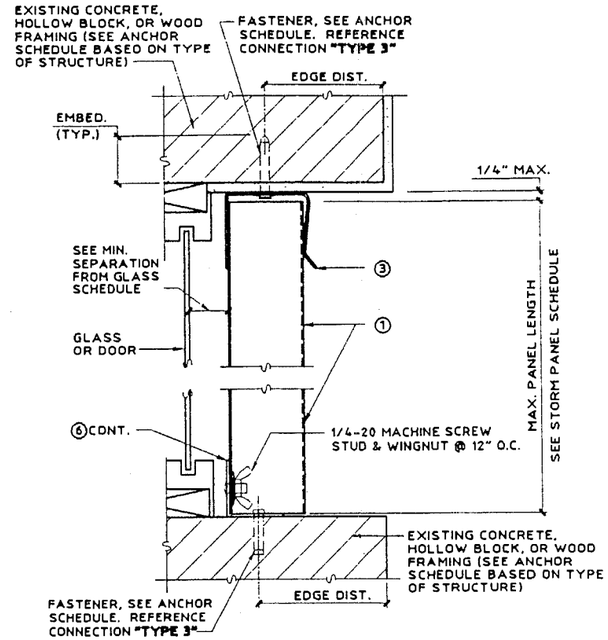

Ⓑ CEILING/INSIDE MOUNT SECTION

SCALE : 3" = 1'-0"

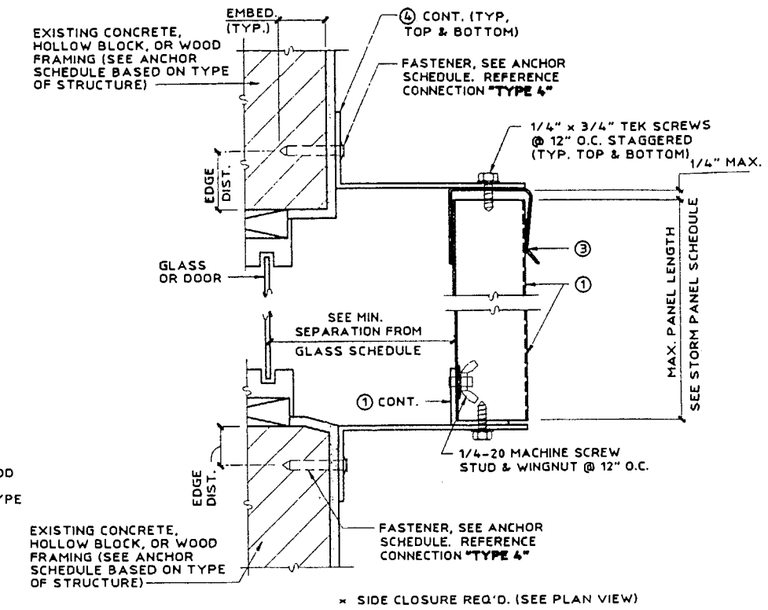

Ⓒ BUILD-OUT MOUNT SECTION

SCALE : 3" = 1'-0"

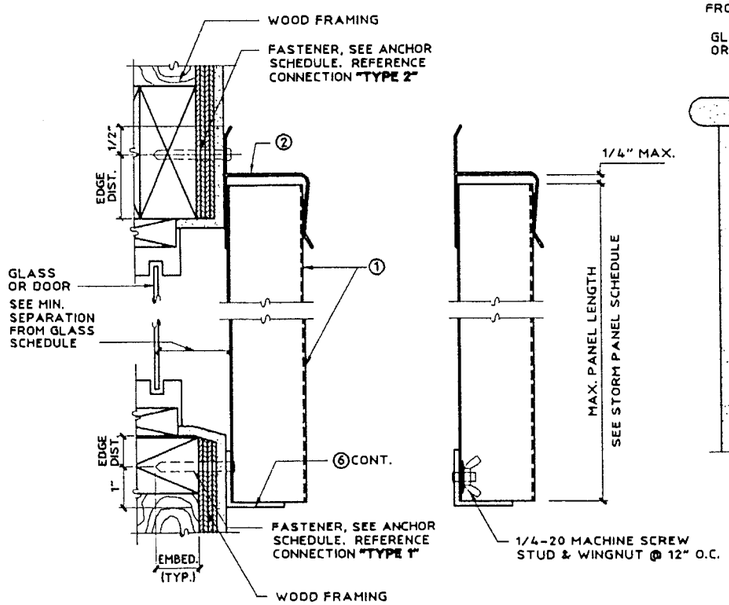

Ⓓ WALL MOUNT SECTION

SCALE : 3" = 1'-0"

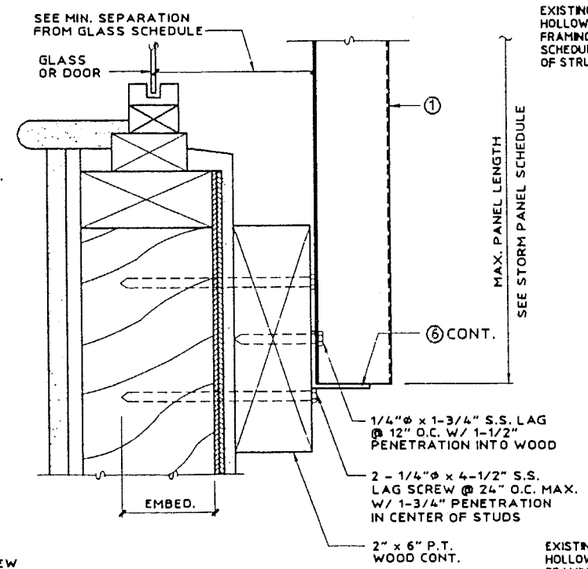

NOTE: THIS DETAIL MAY BE USED AT TOP OR BOTTOM OF PANELS.

Ⓔ WALL MOUNT SECTION (BOTTOM)

SCALE : 3" = 1'-0"

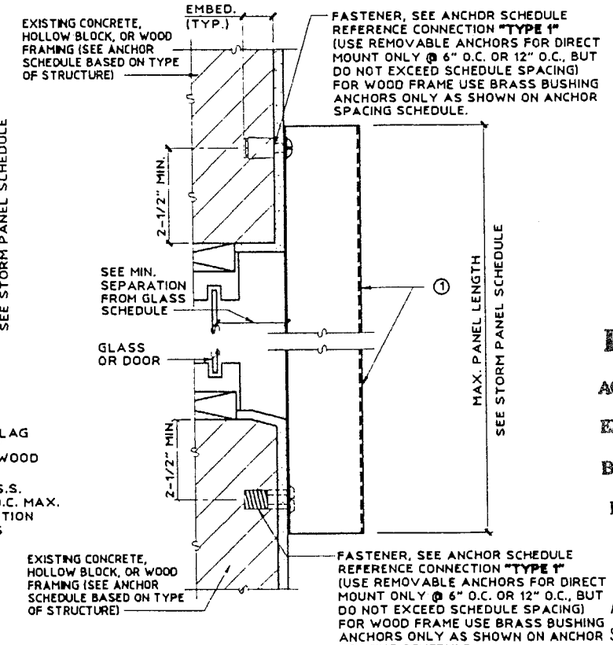

Ⓕ WALL MOUNT SECTION

(DIRECT MOUNT)

SCALE : 3" = 1'-0"

PRODUCT RENEWED

ACCEPTANCE No. 00-0726.04

EXPIRATION DATE 08/07/2003

By Helmy A. Mekkawy

PRODUCT CONTROL DIVISION
BUILDING CODE COMPLIANCE OFFICE

APPROVED AS COMPLYING WITH THE SOUTH FLORIDA BUILDING CODE

DATE MAY 28 1998

BY Helmy A. Mekkawy

PRODUCT CONTROL DIVISION

BUILDING CODE COMPLIANCE OFFICE

ACCEPTANCE NO. 98-0114.01

KNEZEVICH & ASSOCIATES, INC.
CONSULTING ENGINEERS • PRODUCT TESTING
641 MOKENA DRIVE-MIAMI SPRINGS, FLORIDA 33166
MIAMI (305) 883-9571 FT. LAUDERDALE (954) 677-9500
FAX: (305) 883-9572

COPYRIGHT 1998 KNEZEVICH & ASSOCIATES, INC.

0.063" ALUMINUM STORM PANEL

4900B N.E. 11th AVE.
FT. LAUDERDALE, FL 33334
(954) 489-9797

Clear Shutters MANUFACTURING, INC.

revisions			
no	date	by	description
1	5/21/97	JP	COUNTY COMMENTS
2	7/1/97	JP	COUNTY COMMENTS
3	1/7/98	VJK	COUNTY COMMENTS

V.J. KNEZEVICH
PROFESSIONAL ENGINEER
FL License No: PE 0010983

JAN 07 1998

date	10/30/97
scale AS NOTED	drawn by GG
design by VJK	checked by VJK
drawing no 96-202	
sheet 2 of 4	

01/07/98 10:06

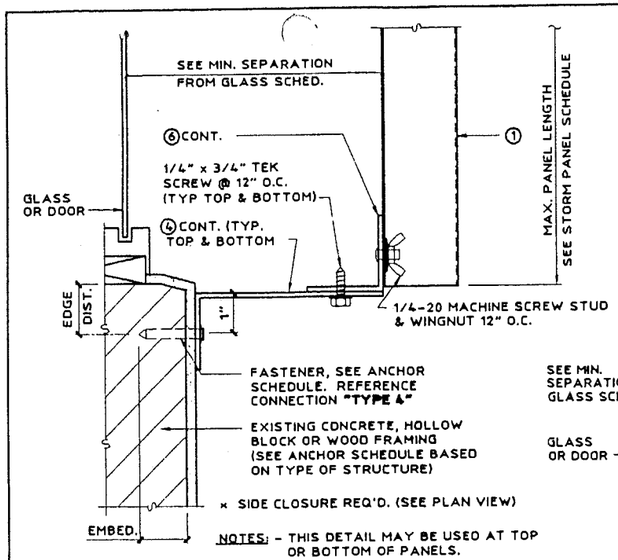

× SIDE CLOSURE REQ'D. (SEE PLAN VIEW)

NOTES: - THIS DETAIL MAY BE USED AT TOP OR BOTTOM OF PANELS.
- HEADERS ② & ③ CANNOT BE USED IN COMBINATION WITH THIS DETAIL.

Ⓖ ALT. BUILD-OUT MOUNT SECTION

SCALE : 3" = 1'-0"

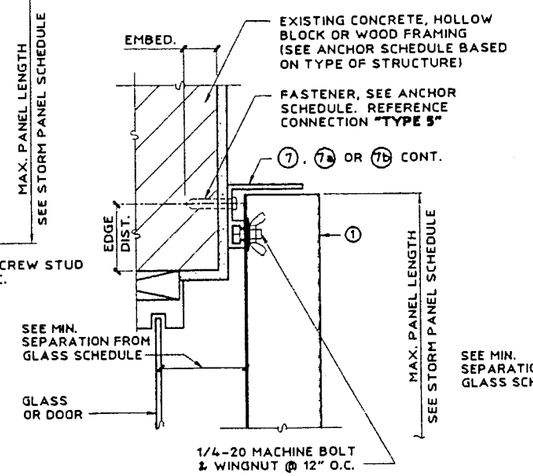

NOTE: THIS DETAIL MAY BE USED AT TOP OR BOTTOM OF PANELS.

Ⓗ WALL MOUNT DETAIL

SCALE : 3" = 1'-0"

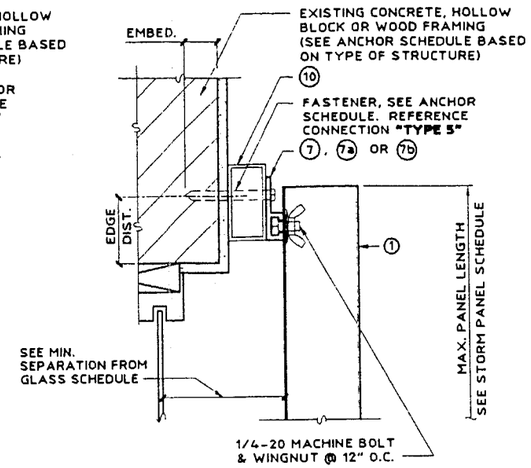

Ⓘ ALT. BUILD-OUT MOUNT SECTION

SCALE : 3" = 1'-0"

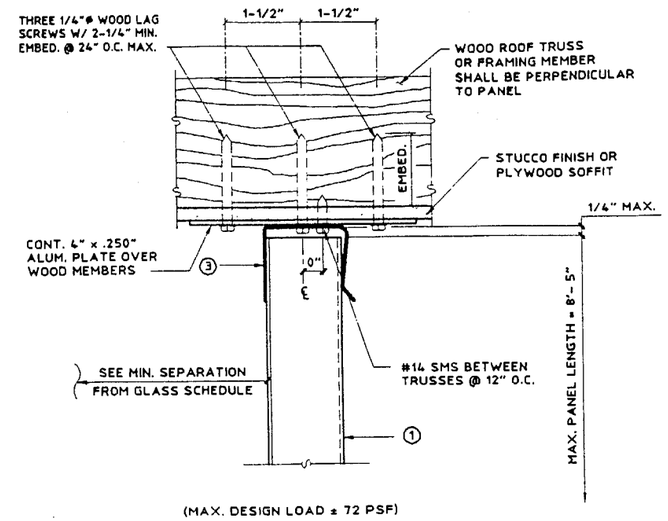

(MAX. DESIGN LOAD ± 72 PSF)

Ⓙ SOFFIT CONNECTION DETAIL

SCALE : 3" = 1'-0"

TABLE 1

STORM PANEL SCHEDULE

NEGATIVE DESIGN LOAD W (PSF)	FOR ALL MOUNTING CONDITIONS L max. (FT-IN)
30.0	11 - 4
40.0	10 - 8
50.0	10 - 1
60.0	9 - 3
70.0	8 - 1
75.0	7 - 7
80.0	7 - 1
90.0	6 - 4
100.0	5 - 8
110.0	5 - 2
120.0	4 - 9
130.0	4 - 4
140.0	4 - 0
150.0	3 - 9
160.0	3 - 6
170.0	3 - 4
180.0	3 - 2
190.0	3 - 0
200.0	2 - 10
210.0	2 - 8
220.0	2 - 7
230.0	2 - 5

TABLE 2

MIN. SEPARATION FROM GLASS SCHEDULE

POSITIVE DESIGN LOAD(W) (PSF)	ACTUAL SHUTTER SPAN (L) (FT - IN)	COLUMN 1 MINIMUM SEPARATION FOR INSTALLATIONS LESS THAN 30' ABOVE GRADE (INCHES) WITH BAR PER NOTE #8 & ELEVATION (11)	COLUMN 2 MINIMUM SEPARATION FOR INSTALLATIONS LESS THAN 30' ABOVE GRADE (INCHES) NO BAR / NO BOLTS PER ELEVATION (12)	COLUMN 3 MINIMUM SEPARATION FOR INSTALLATIONS GREATER THAN 30' ABOVE GRADE (INCHES) NO BAR / NO BOLTS PER ELEVATION (12)
30.0	5 - 3	2-3/8	2-5/8	1-1/2
	8 - 8	2-3/8	2-5/8	2-1/8
	11 - 4	NA	3-3/8	3-3/8
40.0	5 - 3	2-3/8	2-5/8	1-1/2
	8 - 8	2-3/8	2-5/8	2-1/4
	10 - 7	NA	3-3/8	3-1/4
50.0	5 - 3	2-3/8	2-5/8	1-5/8
	8 - 8	2-3/8	2-5/8	2-3/8
	10 - 0	NA	3-3/8	3-3/8
60.0	5 - 3	2-3/8	2-5/8	1-5/8
	8 - 8	2-3/8	2-5/8	2-5/8
	9 - 7	NA	3-3/8	3-1/4
70.0	5 - 3	2-3/8	2-5/8	1-5/8
	8 - 8	2-3/8	2-5/8	2-5/8
	9 - 3	NA	3-3/8	3

NA DESIGNATES NOT APPLICABLE, DO NOT USE.

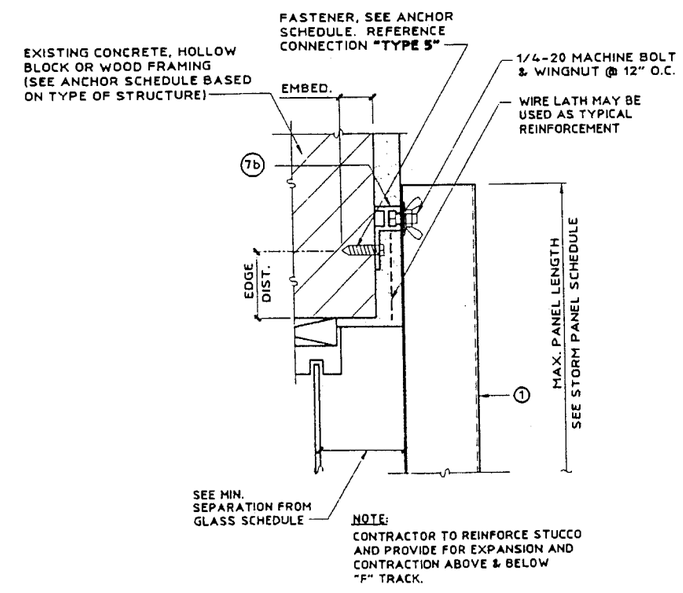

NOTE:
CONTRACTOR TO REINFORCE STUCCO AND PROVIDE FOR EXPANSION AND CONTRACTION ABOVE & BELOW "F" TRACK.

Ⓚ ALT. WALL MOUNT DETAIL

SCALE : 3" = 1'-0"

PRODUCT RENEWED
ACCEPTANCE No. 00-0726.04
EXPIRATION DATE 08/07/2003
By Helmy A. Mahr
PRODUCT CONTROL DIVISION
BUILDING CODE COMPLIANCE OFFICE

APPROVED AS COMPLYING WITH THE SOUTH FLORIDA BUILDING CODE
DATE MAY 28 1998
BY Helmy A. Mahr
PRODUCT CONTROL DIVISION
BUILDING CODE COMPLIANCE OFFICE
ACCEPTANCE NO. 98-0114.01

KNEZEVICH & ASSOCIATES, INC.
CONSULTING ENGINEERS • PRODUCT TESTING
641 MOKENA DRIVE-MIAMI SPRINGS, FLORIDA 33166
MIAMI (305) 883-9571 FT. LAUDERDALE (954) 677-9500
FAX: (305) 883-9572
COPYRIGHT 1998 KNEZEVICH & ASSOCIATES, INC.

0.063" ALUMINUM STORM PANEL
4900B N.E. 11th AVE.
FT. LAUDERDALE, FL 33334
(954) 489-9797
Shutters MANUFACTURING, INC.

revisions

no	date	by	description
1	5/27/97	JP	COUNTY COMMENTS
2	7/1/97	JP	COUNTY COMMENTS
3	1/7/98	VJK	COUNTY COMMENTS

V.J. KNEZEVICH
PROFESSIONAL ENGINEER
FL License No PE 0010983
JAN 07 1998
date 10/30/97
scale AS NOTED | drawn by GG
design by VJK | checked by VJK
drawing no 96-202
sheet 3 of 4

01/07/98 10:09

ANCHOR SCHEDULE

FASTENER SPACING (INCHES) REQUIRED FOR VARIOUS DESIGN LOADS AND SPANS

EXISTING STRUCTURE	ANCHOR TYPE	LOAD (W) PSF MAX.	2" EDGE DISTANCE															3" EDGE DISTANCE														
			5'-3" MAX. SPAN					8'-4" MAX. SPAN					11'-4" MAX. SPAN					5'-3" MAX. SPAN					8'-4" MAX. SPAN					11'-4" MAX. SPAN				
			CONNECTION TYPE					CONNECTION TYPE					CONNECTION TYPE					CONNECTION TYPE					CONNECTION TYPE					CONNECTION TYPE				
			1	2	3	4	5	1	2	3	4	5	1	2	3	4	5	1	2	3	4	5	1	2	3	4	5	1	2	3	4	5
MIN. 3,000 PSI CONCRETE	1/4"Ø ITW TAPCON W/ 1-1/4" MIN. EMBEDMENT	48	12	7	12	8	12	12	3	8	5	7	12		5	3	5	12	8	12	9	12	12	3	9	6	8	12		7	4	6
		72	12	4	9	6	8	12		6	4	5	9		4	3	3	12	5	11	7	9	12		7	4	5	11		5	3	4
		92	12	3	8	5	6	10		5	3	3						12	4	10	6	7	11		6	4	4					
		156	9		6		3			4								10	3	8	5	4										
		200D	6		3													7		4												
	1/4"Ø RAWL CALK-IN W/ 7/8" EMBEDMENT & 1/4-20 SIDEWALK BOLT (3/4"Ø HEAD)	48	12	12	12	12	12	12	5	9	8	12	12	3	6	6	9	12	12	12	12	12	12	7	12	11	12	12	4	10	8	11
		72	12	8	11	11	12	12	4	7	6	8	12		5	5	6	12	10	12	12	12	12	5	11	8	10	12	3	8	6	7
		92	12	6	10	9	10	12	3	6	5	6						12	7	12	11	12	12	4	9	7	8					
		156	12	4	7	7	6											12	5	12	9	7										
		200	10		4	4	4											12		7	5	5										
	1/4"Ø ELCO FEMALE "PANELMATE W/ 1-1/4" MIN. EMBED. & 1/4-20 SIDEWALK BOLT	48	12	6	9	6	9	12		6	4	6	11		4	3	4	12	6	11	7	9	12		6	4	6	12		5	3	4
		72	12	3	7	5	6	10		4	3	4	7		3			12	3	8	5	6	10		5	3	4	8		3		3
		92	12	3	6	4	5	8		4		3						12	3	7	4	5	8		4		3					
		156	7		5	3												8		5	3	3										
		200	5															5		3												
	1/4"Ø ELCO MALE "PANELMATE" W/ 1-1/4" MIN. EMBEDMENT	48	12	6	9	6	9	12		6	4	6	11		4	3	4	12	6	11	7	9	12		6	4	6	12		5	3	4
		72	12	3	7	5	6	10		4	3	4	7		3			12	3	8	5	6	10		5	3	4	8		3		3
		92	12	3	6	4	5	8		4		3						12	3	7	4	5	8		4		3					
		156	7		5	3												8		5	3	3										
		200	5															5		3												

ANCHOR SCHEDULE

FASTENER SPACING (INCHES) REQUIRED FOR VARIOUS DESIGN LOADS AND SPANS

EXISTING STRUCTURE	ANCHOR TYPE	LOAD (W) PSF MAX.	2" EDGE DISTANCE															3" EDGE DISTANCE														
			5'-3" MAX. SPAN					8'-4" MAX. SPAN					11'-4" MAX. SPAN					5'-3" MAX. SPAN					8'-4" MAX. SPAN					11'-4" MAX. SPAN				
			CONNECTION TYPE					CONNECTION TYPE					CONNECTION TYPE					CONNECTION TYPE					CONNECTION TYPE					CONNECTION TYPE				
			1	2	3	4	5	1	2	3	4	5	1	2	3	4	5	1	2	3	4	5	1	2	3	4	5	1	2	3	4	5
HOLLOW CONCRETE BLOCK	1/4"Ø ITW TAPCON W/ 1-1/4" MIN. EMBEDMENT	48	12	4	7	5	4	10		4		4	7		3		3	12	4	8	5	7	12		5	3	4	8		4		3
		72	11		5	3	3	7		3			5					12		6	4	4	8		4		3	5		3		
		92	8		4		3	5		3								10		5	3	3	6		3							
		156	5		3													5		4												
		200	3															4														
	1/4"Ø RAWL CALK-IN W/ 7/8" EMBEDMENT & 1/4-20 SIDEWALK BOLT (3/4"Ø HEAD)	48	12	5	8	5	8	12		5	3	5	10		3		3	12	6	12	7	10	12	3	7	4	6	12		5	3	4
		72	12	3	6	4	5	9		4		3	6					12	4	9	5	6	11		5	3	4	8		4		3
		92	11		5	3	4	7		3								12	3	8	4	5	9		5	3	3					
		156	6		4	3												8		6	3	3										
		200	4															5		3												
	1/4"Ø ELCO FEMALE "PANELMATE W/ 1-1/4" MIN. EMBED. & 1/4-20 SIDEWALK BOLT	48	12	6	9	6	9	12		6	4	6	11		4	3	4	12	6	11	7	9	12		6	4	6	12		5	3	4
		72	12	3	7	5	6	10		4	3	4	7		3			12	3	8	5	6	10		5	3	4	8		3		3
		92	12	3	6	4	5	8		4		3						12	3	7	4	5	8		4		3					
		156	7		5	3												8		5	3	3										
		200	5															5		3												
	1/4"Ø ELCO MALE "PANELMATE" W/ 1-1/4" MIN EMBEDMENT	48	12	6	9	6	9	12		6	4	6	11		4	3	4	12	6	11	7	9	12		6	4	6	12		5	3	4
		72	12	3	7	5	6	10		4	3	4	7		3			12	3	8	5	6	10		5	3	4	8		3		3
		92	12	3	6	4	5	8		4		3						12	3	7	4	5	8		4		3					
		156	7		5	3												8		5	3	3										
		200	5															5		3												

ANCHOR SCHEDULE

FASTENER SPACING (INCHES) REQUIRED FOR VARIOUS DESIGN LOADS AND SPANS

EXISTING STRUCTURE	ANCHOR TYPE	LOAD (W) PSF MAX.	3/4" EDGE DISTANCE														
			5'-3" MAX. SPAN					8'-4" MAX. SPAN					11'-4" MAX. SPAN				
			CONNECTION TYPE					CONNECTION TYPE					CONNECTION TYPE				
			1	2	3	4	5	1	2	3	4	5	1	2	3	4	5
WOOD	1/4"Ø WOOD LAG W/ 1-3/4" MIN. THREAD EMBEDMENT SHEAR PARALLEL TO WOOD GRAIN (1-3/4" MIN)	48	12	12	12	12	12	12	5	8	8	12	12	3	6	6	9
		72	12	7	10	10	12	12	4	6	6	8	12		4	5	6
		92	12	6	8	9	10	12	3	5	5	6					
		156	12	4	6	7	6										
		200	10		3	4	4										
	1/4"Ø WOOD LAG W/ 1-3/4" MIN. THREAD EMBEDMENT SHEAR PERPENDICULAR TO WOOD GRAIN (1-3/4" MIN)	48	12	12	10	12	12	12	5	6	8	12	12	3	5	6	9
		72	12	7	8	10	12	12	4	5	6	8	12		3	5	6
		92	12	6	7	9	10	12	3	4	5	6					
		156	12	4	5	7	6										
		200	10		3	4	4										
	5/16"Ø BRASS WOOD BUSHING W/ 5/8" MIN EMBED. & 1/4-20 MACHINE SCREW	48	12	7	12	8	11	12	3	8	5	7	12		6	3	5
		72	12	4	10	6	7	12		6	4	4	9		4		3
		92	12	3	8	5	6	10		5	3	3					
		156	9		6	4	3										
		200	6		3												

ANCHOR NOTES:

1. SPANS & LOADS SHOWN HERE ARE FOR ANCHOR SPACING ONLY. ALLOWABLE SHUTTER SPANS FOR SPECIFIC LOADS MUST BE LIMITED TO THOSE SHOWN IN TABLE 1, SHEET 3.
2. ENTER TABLE BASED ON THE EXISTING STRUCTURE MATERIAL, ANCHOR TYPE AND EDGE DISTANCE.
3. CHOOSE DESIGN LOAD GREATER THAN OR EQUAL TO NEGATIVE DESIGN LOAD ON BUILDING AND CHOOSE SPAN GREATER THAN OR EQUAL TO SHUTTER SPAN.
4. REFERENCE SPACING FROM APPROPRIATE CONNECTION TYPE. SEE CONNECTION DETAILS FOR IDENTIFICATION OF CONNECTION TYPE.
5. MINIMUM EMBEDMENT AND EDGE DISTANCE EXCLUDES WALL FINISH OR STUCCO.
6. WHERE LAG SCREWS FASTEN TO NARROW FACE OF STUD FRAMING, FASTENER SHALL BE LOCATED IN CENTER OF NOMINAL 2" x 4" (MIN) WOOD STUD. WOOD SHALL BE "SOUTHERN PINE" G = 0.55 OR BETTER DENSITY.
7. ANCHORS SHALL BE INSTALLED IN ACCORDANCE WITH WITH MANUFACTURERS RECOMMENDATIONS W/ MIN. EMBEDMENT INDICATED ABOVE.
8. ▨ DESIGNATES ANCHOR CONDITIONS WHICH ARE NOT ACCEPTABLE USES.
9. EXISTING STRUCTURE MAY BE CONCRETE, HOLLOW BLOCK, OR WOOD FRAMING. REFERENCE ANCHOR SCHEDULE FOR PROPER ANCHOR TYPE BASED ON TYPE OF EXISTING STRUCTURE.
10. ✱ DESIGNATES REMOVABLE ANCHORS REQUIRED FOR DIRECT MOUNT @ 6" OR 12" SPACING ONLY. SPACING NOT TO EXCEED VALUE SPECIFIED IN ANCHOR SCHEDULE.

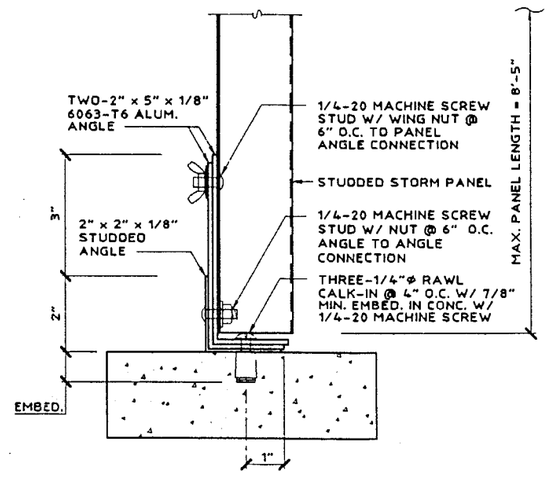

(MAX. DESIGN LOAD ± 72 PSF)

ALT. ASSEMBLY MOUNT

SCALE 3" = 1'-0"

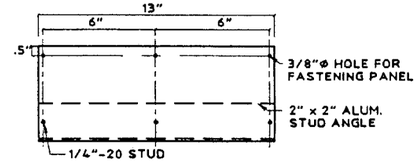

ANGLE ASSEMBLY

N.T.S.

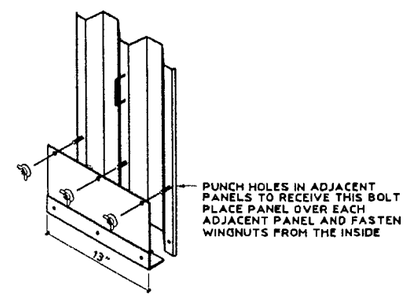

Ⓛ STORM PANEL INTERIOR FASTENING ISOMETRIC

N.T.S.

PRODUCT RENEWED

ACCEPTANCE No. 00-0726.04

EXPIRATION DATE 08/07/2003

By Helmy A. Meker

PRODUCT CONTROL DIVISION

BUILDING CODE COMPLIANCE OFFICE

APPROVED AS COMPLYING WITH THE SOUTH FLORIDA BUILDING CODE

DATE MAY 28 1998

BY Helmy A. Meker

PRODUCT CONTROL DIVISION

BUILDING CODE COMPLIANCE OFFICE

ACCEPTANCE NO. 98-0114.01

KNEZEVICH & ASSOCIATES, INC.
CONSULTING ENGINEERS • PRODUCT TESTING
641 MOKENA DRIVE · MIAMI SPRINGS, FLORIDA 33166
MIAMI (305) 883-9571 FT. LAUDERDALE (954) 677-9500
FAX: (305) 883-9572

COPYRIGHT 1998 KNEZEVICH & ASSOCIATES, INC.

0.063" ALUMINUM STORM PANEL

4900B N.E. 11th AVE.
FT. LAUDERDALE, FL 33334
(954) 489-9797
Ocean Shutters MANUFACTURING, INC.

revisions			
no	date	by	description
1	5/21/97	JP	COUNTY COMMENTS
2	7/1/97	JP	COUNTY COMMENTS
3	1/7/98	VJK	COUNTY COMMENTS

V.J. KNEZEVICH
PROFESSIONAL ENGINEER
FL License No. PE 0010983

JAN 07 1998

date 10/30/97	
scale AS NOTED	drawn by GG
design by VJK	checked by VJK

drawing no. 96-202

sheet 4 of 4