MIAMI-DADE

MIAMI-DADE COUNTY, FLORIDA
METRO-DADE FLAGLER BUILDING

BUILDING CODE COMPLIANCE OFFICE
METRO-DADE FLAGLER BUILDING
140 WEST FLAGLER STREET, SUITE 1603
MIAMI, FLORIDA 33130-1563
(305) 375-2901 FAX (305) 375-2908

CONTRACTOR LICENSING SECTION
(305) 375-2527 FAX (305) 375-2558

CONTRACTOR ENFORCEMENT DIVISION
(305) 375-2966 FAX (305) 375-2908

PRODUCT CONTROL DIVISION
(305) 375-2902 FAX (305) 372-6339

PRODUCT CONTROL NOTICE OF ACCEPTANCE

American Building Products L.L.C.
5600 Jefferson Hwy. Bldg. W-1 Suite 200
Zurick Tuffenvi ,LA 70123

Your application for Notice of Acceptance (NOA) of:
0.050" Aluminum Storm Panels Shutter
under Chapter 8 of the Code of Miami-Dade County governing the use of Alternate Materials and Types of Construction, and completely described herein, has been recommended for acceptance by the Miami-Dade County Building Code Compliance Office (BCCO) under the conditions specified herein.

This NOA shall not be valid after the expiration date stated below. BCCO reserves the right to secure this product or material at any time from a jobsite or manufacturer's plant for quality control testing. If this product or material fails to perform in the approved manner, BCCO may revoke, modify, or suspend the use of such product or material immediately. BCCO reserves the right to revoke this approval, if it is determined by BCCO that this product or material fails to meet the requirements of the South Florida Building Code.

The expense of such testing will be incurred by the manufacturer.

ACCEPTANCE NO.: 00-0726.05
EXPIRES: 03/22/2004

Raul Rodriguez
Chief Product Control Division

THIS IS THE COVERSHEET, SEE ADDITIONAL PAGES FOR SPECIFIC AND GENERAL CONDITIONS
BUILDING CODE & PRODUCT REVIEW COMMITTEE

This application for Product Approval has been reviewed by the BCCO and approved by the Building Code and Product Review Committee to be used in Miami-Dade County, Florida under the conditions set forth above.

Francisco J. Quintana, R.A.
Director
Miami-Dade County
Building Code Compliance Office

APPROVED: 03/22/2001

American Building Products L.L.C.

ACCEPTANCE No. : 00-0726.05

APPROVED : 03/22/2001

EXPIRES : 03/22/2004

NOTICE OF ACCEPTANCE: SPECIFIC CONDITIONS

1. SCOPE

This approves an 0.050" aluminum storm panels shutter, as described in Section 2 of this Notice of Acceptance, designed to comply with the South Florida Building Code, 1994 Edition for Miami-Dade County, for the locations where the pressure requirements, as determined by SFBC Chapter 23, do not exceed the Design Pressure Rating values indicated in the approved drawings.

2. PRODUCT DESCRIPTION

This 0.050" aluminum storm panels shutter and its components shall be constructed in strict compliance with the following documents: Drawing No. 99-336, titled " 0.050" Aluminum Storm Panel", prepared by Knezevich & Associates, Inc., dated June 21, 2000, last revision #2 dated February 21, 2001, signed and sealed by V.J. Knezevich, P.E., sheets 1 through 6 of 6, bearing the Miami-Dade County Product Control Approval stamp with the Notice of Acceptance number and approval date by the Miami-Dade County Product Control Division. These documents shall hereinafter be referred to as the approved drawings.

3. LIMITATIONS

All permanent set components, included but not limited to embedded anchor bolts, threaded cones, metal shields, headers and sills, must be protected against corrosion, contamination and damage at all times.

4. INSTALLATION

This 0.050" aluminum storm panels shutter and its components shall be installed in strict compliance with the approved drawings.

5. LABELING

Each panel shall bear a permanent label with the manufacturer's name or logo, city, state and the following statement: "Miami-Dade County Product Control Approved".

6. BUILDING PERMIT REQUIREMENTS

6.1 Application for building permit shall be accompanied by copies of the following:

- **6.1.1** This Notice of Acceptance.
- **6.1.2** Duplicate copies of the approved drawings, as identified in Section 2 of this Notice of Acceptance, clearly marked to show the components selected for the proposed installation.
- **6.1.3** Any other documents required by the Building Official or the South Florida Building Code (SFBC) in order to properly evaluate the installation of this system.

Helmy A. Makar, P.E.- Product Control Examiner
Product Control Division

American Building Products L.L.C.

ACCEPTANCE No. : 00-0726.05

APPROVED : 03/22/2001

EXPIRES : 03/22/2004

NOTICE OF ACCEPTANCE: STANDARD CONDITIONS

1 Renewal of this Acceptance (approval) shall be considered after a renewal application has been filed and the original submitted documents, including test-supporting data, engineering documents, are no older than eight (8) years.

2. Any and all approved products shall be permanently labeled with the manufacturer's name, city, state, and the following statement: "Miami-Dade County Product Control Approved", or as specifically stated in the specific conditions of this Acceptance.

3. Renewals of Acceptance will not be considered if:
   a. There has been a change in the South Florida Building Code affecting the evaluation of this product and the product is not in compliance with the code changes.
   b. The product is no longer the same product (identical) as the one originally approved.
   c. If the Acceptance holder has not complied with all the requirements of this acceptance, including the correct installation of the product.
   d. The engineer, who originally prepared, signed and sealed the required documentation initially submitted, is no longer practicing the engineering profession.

4. Any revision or change in the materials, use, and/or manufacture of the product or process shall automatically be cause for termination of this Acceptance, unless prior written approval has been requested (through the filing of a revision application with appropriate fee) and granted by this office.

5. Any of the following shall also be grounds for removal of this Acceptance:
   a. Unsatisfactory performance of this product or process.
   b. Misuse of this Acceptance as an endorsement of any product, for sales, advertising or any other purposes.

6. The Notice of Acceptance number preceded by the words Miami-Dade County, Florida, and followed by the expiration date may be displayed in advertising literature. If any portion of the Notice of Acceptance is displayed, then it shall be done in its entirety.

7. A copy of this Acceptance as well as approved drawings and other documents, where it applies, shall be provided to the user by the manufacturer or its distributors and shall be available for inspection at the job site at all times. The engineer needs not reseal the copies.

8. Failure to comply with any section of this Acceptance shall be cause for termination and removal of Acceptance.

9. This Notice of Acceptance consists of pages 1, 2 and this last page 3.

END OF THIS ACCEPTANCE

Helmy A. Makar, P.E.- Product Control Examiner
Product Control Division

American Building Products L.L.C.

ACCEPTANCE No. : 00-0726.05

APPROVED : 03/22/2001

EXPIRES : 03/22/2004

NOTICE OF ACCEPTANCE: EVIDENCE SUBMITTED

(For File ONLY. Not part of NOA.)

A. DRAWINGS:

1. *Drawing Number 99-336, titled " 0.050" Aluminum Storm Panel", sheets 1 through 6 of 6, prepared by Knezevich & Associates, dated June 21, 2000, last revision #2 dated February 21, 2001, signed and sealed by V. J. Knezevich, P.E.*

B. TESTS:

1. *Test report on Large Missile Impact Test, Cyclic Wind Pressure Test and Uniform Static Air Pressure Test on 0.050" aluminum storm panels, prepared by Construction Testing Corporation, Test Report No. CTC 00-002ABP, dated June 15, 2000, signed and sealed by Christopher G. Tyson, P.E.*
2. *Test report on Large Missile Impact Test and Cyclic Wind Pressure Test on 0.050" aluminum storm panels, prepared by Construction Testing Corporation, Test Report No. CTC 00-025, dated July 2, 2000, signed and sealed by Yamil G. Kuri, P.E.*

C. CALCULATIONS:

1. *Comparative Analysis and Anchor Calculations, dated June 21, 2000, pages 1 through 42, prepared by Knezevich & Associates, Inc., signed and sealed by V. J. Knezevich, P.E.*

D. MATERIAL CERTIFICATION:

1. *Mill Certified Inspection Report of coils, dated 08/27/99, for Aluminum Alloy 3004-H34 by Commonwealth Aluminum Corporation with chemical composition and mechanical properties.*
2. *Certified Tensile Test Report by Certified Testing Laboratories, Report No. CTL-381F, dated 04/13/2000, for specimen from test report 00-002, signed and sealed by Ramesh Patel, P.E.*

Helmy A. Makar, P.E.- Product Control Examiner
Product Control Division

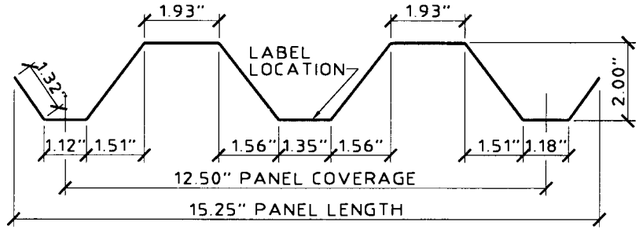

1 STORM PANEL
SCALE: 3" = 1' - 0"

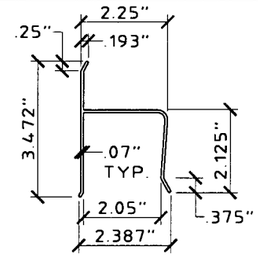

2 "h" HEADER
SCALE: 3" = 1' - 0"

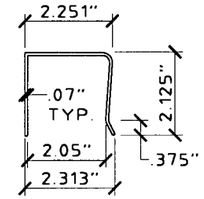

3 "U" HEADER
SCALE: 3" = 1' - 0"

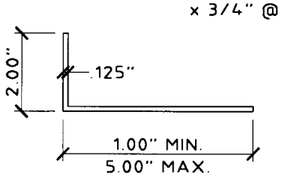

4 ANGLE
SCALE: 3" = 1' - 0"

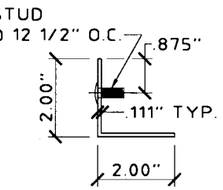

5 STUD ANGLE
SCALE: 3" = 1' - 0"

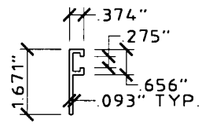

6 "F" TRACK
SCALE: 3" = 1' - 0"

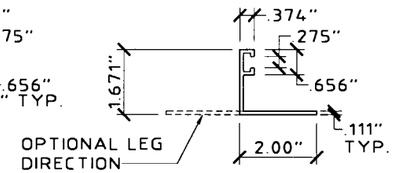

7 "F" ANGLE
SCALE: 3" = 1' - 0"

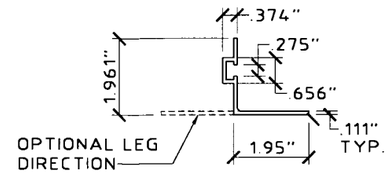

8 REV. "F" ANGLE
SCALE: 3" = 1' - 0"

GENERAL NOTES:

1. THIS SHUTTER SYSTEM IS DESIGNED IN ACCORDANCE WITH THE SOUTH FLORIDA BUILDING CODE 1994 EDITION FOR MIAMI-DADE COUNTY.
2. POSITIVE AND NEGATIVE DESIGN PRESSURE CALCULATIONS SHALL BE PERFORMED FOR SPECIFIC JOBS IN ACCORDANCE WITH ASCE 7-88 "MINIMUM DESIGN LOADS FOR BUILDINGS AND OTHER STRUCTURES". TABLES SHALL BE REFERENCED AT THE APPROPRIATE DESIGN LOADS.
3. STORM PANELS SHALL BE 3004-H34 ALUMINUM ALLOY 0.050" THICK. ALL EXTRUSIONS SHALL BE 6063-T6 ALUMINUM ALLOY, U.O.N.
4. PRODUCT MARKINGS SHALL BE WITHIN 12" OF ONE END OF THE PANEL WITH A MIN. OF ONE MARKING PER PANEL, AND SHALL BE LABELED AS FOLLOWS:

   AMERICAN BUILDING PRODUCTS, LLC
   NEW ORLEANS, LOUISIANA
   MIAMI-DADE COUNTY PRODUCT CONTROL APPROVED

5. ALL BOLTS AND WASHERS SHALL BE GALVANIZED OR STAINLESS STEEL WITH A MINIMUM TENSILE STRENGTH OF 60 K.S.I.
6. THE DETAILS AND SPECIFICATIONS SHOWN HEREIN REPRESENT THE PRODUCTS TESTED FOR IMPACT, CYCLIC AND UNIFORM STATIC AIR PRESSURE TESTING IN CONFORMANCE WITH DADE COUNTY PROTOCOLS PA 201, 203, AND 202.
   REFERENCE CONSTRUCTION TESTING CORP. (C.T.C.) TEST REPORT No. 00-002ABP & No. 00-025.
7. TOP & BOTTOM DETAILS SHOWN MAY BE INTERCHANGED AS FIELD CONDITIONS DICTATE. PANELS MAY BE MOUNTED HORIZONTALLY WHERE APPLICABLE.
8. ANCHORS SHALL BE INSTALLED IN ACCORDANCE WITH MANUFACTURERS RECOMMENDATIONS. EMBEDMENT LENGTHS SHALL BE AS NOTED AND DO NOT INCLUDE STUCCO OR OTHER FINISHES.

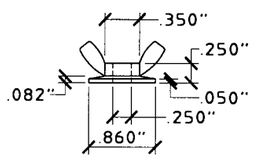

(ZAMAC 3 ALLOY)

9 WASHERED WINGNUT
SCALE : HALF SIZE

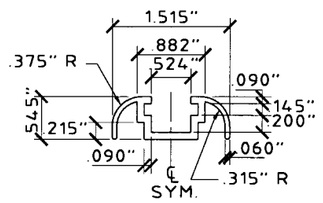

10 DECORATIVE C-TRACK
SCALE : HALF SIZE

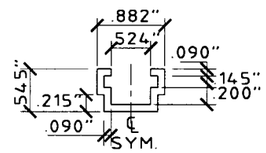

11 C-TRACK
SCALE : HALF SIZE

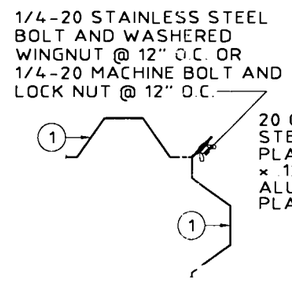

A CORNER CLOSURE DETAIL
SCALE: 1-1/2" = 1' - 0"

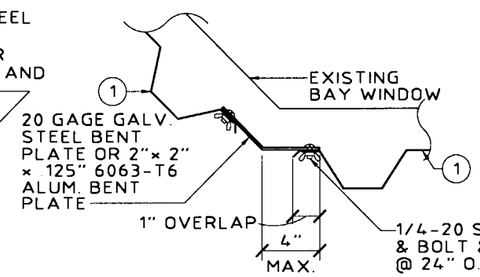

B CORNER CLOSURE DETAIL
SCALE: 1-1/2" = 1' - 0"

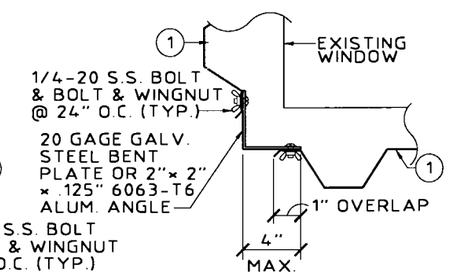

C CORNER CLOSURE DETAIL
SCALE: 1-1/2" = 1' - 0"

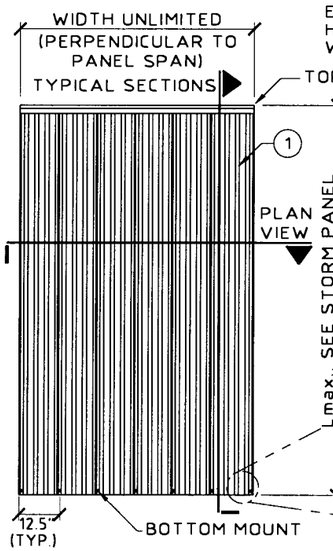

G TYPICAL VERTICAL ELEVATION
SCALE: 1/4" = 1' - 0"

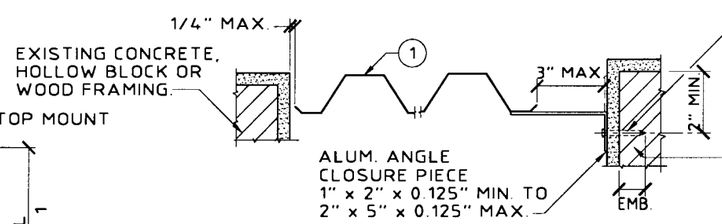

D TRAP MOUNT CLOSURE DETAIL
SCALE: 1-1/2" = 1' - 0"

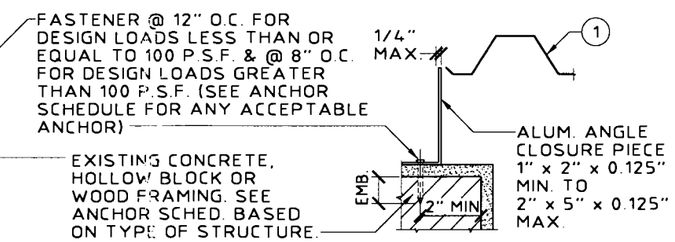

E BUILD-OUT MOUNT CLOSURE DETAIL
SCALE: 1-1/2" = 1' - 0"

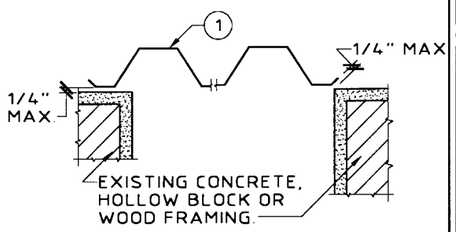

F WALL MOUNT CLOSURE DETAIL
SCALE: 1-1/2" = 1' - 0"

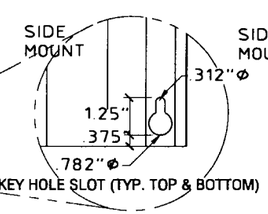

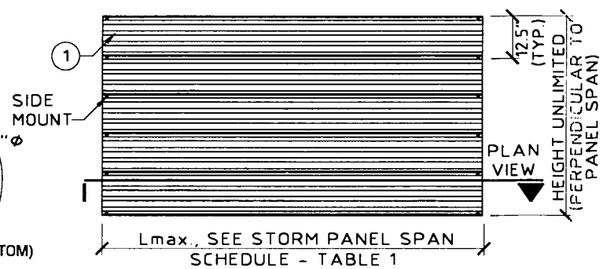

H TYPICAL HORIZONTAL ELEVATION
SCALE: 1/4" = 1' - 0"

APPROVED AS COMPLYING WITH THE SOUTH FLORIDA BUILDING CODE
DATE 03/22/2001
BY Anthony A. Mesker
PRODUCT CONTROL DIVISION
BUILDING CODE COMPLIANCE OFFICE
ACCEPTANCE NO. 00-0726.05

KNEZEVICH & ASSOCIATES, INC.
CONSULTING ENGINEERS • PRODUCT TESTING
1260 N. UNIVERSITY DRIVE, SUITE 180 • FORT LAUDERDALE, FL 33322
TEL: (954) 382-2800 • FAX: (954) 382-2989 • FLORIDA COA #3205
WEBSITE: WWW.KNEZEVICH.COM • E-MAIL: KA@KNEZEVICH.COM

COPYRIGHT © 2000 KNEZEVICH & ASSOCIATES, INC.

0.050" ALUMINUM STORM PANEL

American Building Products
5600 Jefferson Hwy, Bldg. W-2 Suite 248
Harahan, LA 70123
TEL888-734-9941/(504)734-9941
FAX(504) 734-5788

revisions

no.	date	by	description
1	09/25/00	AS	GENERAL REVISION
2	02/21/01	JP	GENERAL NOTES/DETAILS U & V

V.J. KNEZEVICH
PROFESSIONAL ENGINEER
FL License No: PE 0010983
FEB 22 2001

date 06/21/00
scale AS NOTED
drawn by AV
design by JP
checked by VJK
drawing no. 99-336
sheet 1 of 6

02/21/01 12:32

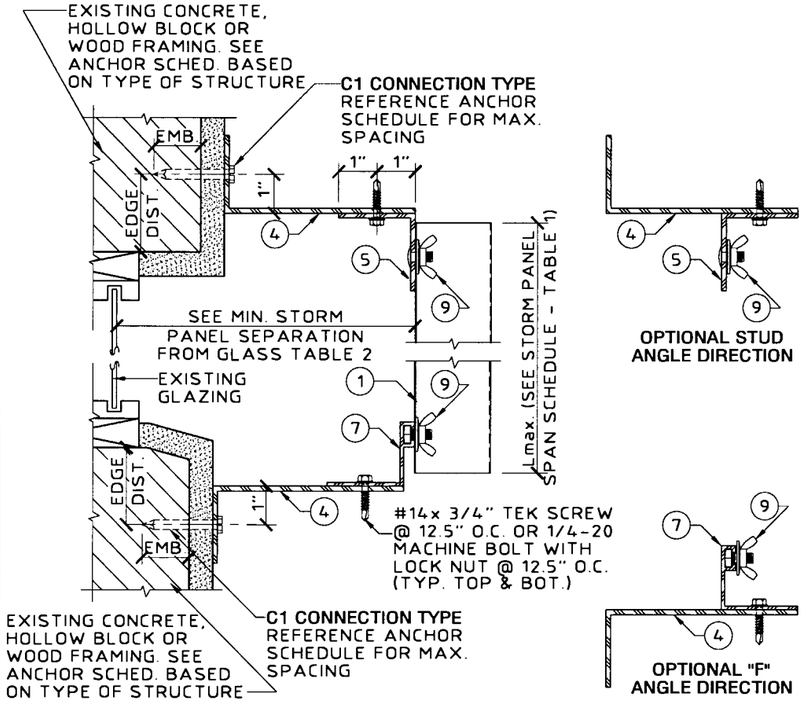

(J) BUILD-OUT MOUNT SECTION
SCALE: 3" = 1' - 0"

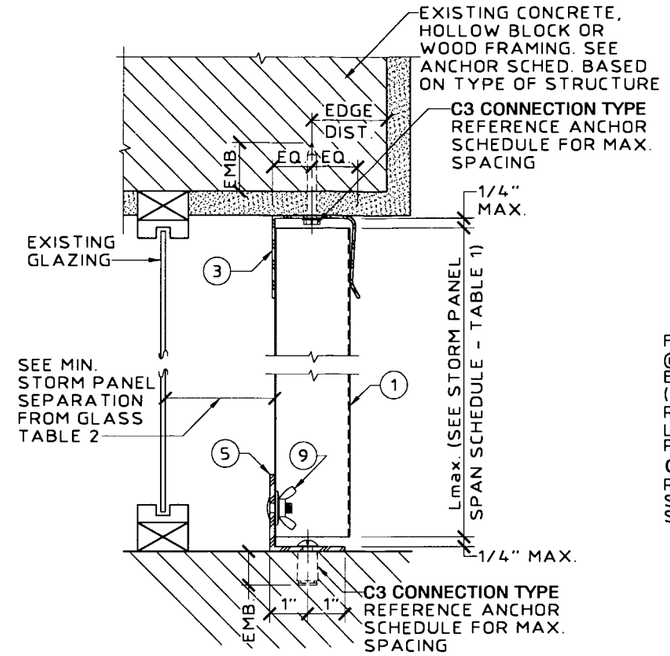

(K) CEILING/FLOOR MOUNT SECTION
SCALE: 3" = 1' - 0"

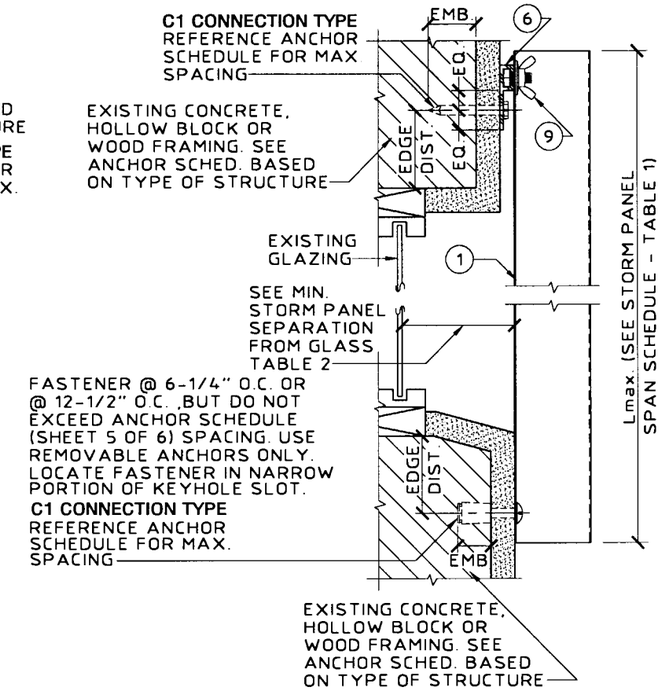

(L) "F" TRACK/DIRECT MOUNT SECTION
SCALE: 3" = 1' - 0"

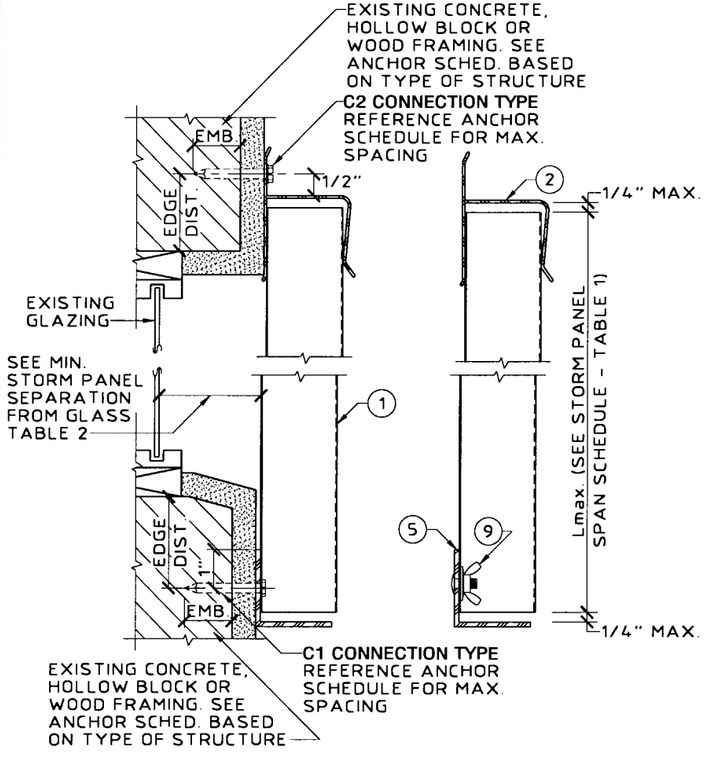

(M) WALL MOUNT SECTION
SCALE: 3" = 1' - 0"

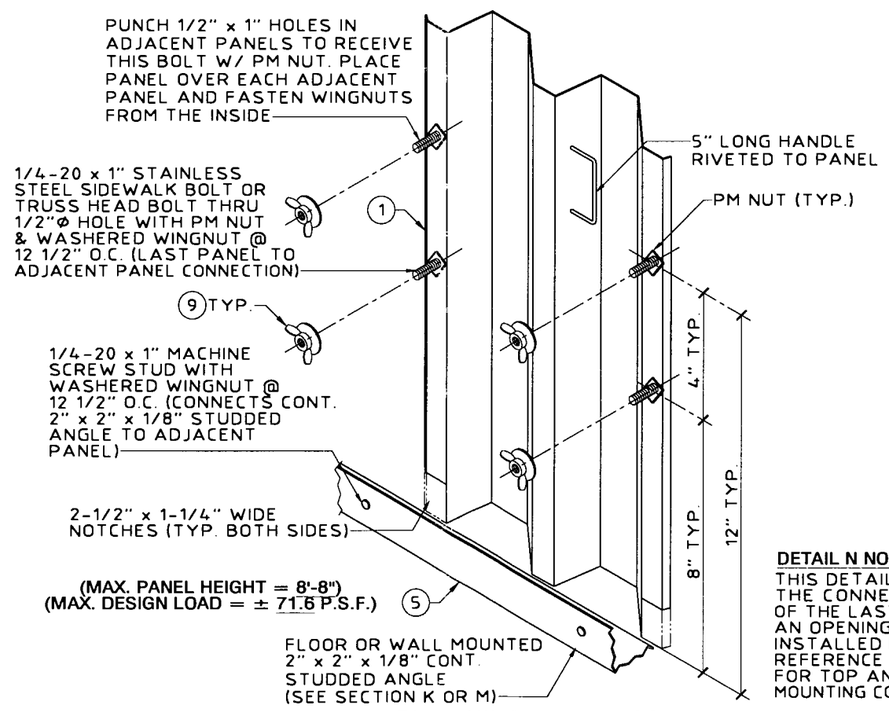

(N) INTERIOR FASTENING PANEL ASSEMBLY
N.T.S.

DETAIL N NOTE:
THIS DETAIL DEPICTS THE CONNECTION OF THE LAST PANEL FOR AN OPENING WITH PANELS INSTALLED FROM INSIDE. REFERENCE DETAILS K OR M FOR TOP AND BOTTOM MOUNTING CONDITIONS.

APPROVED AS COMPLYING WITH THE SOUTH FLORIDA BUILDING CODE
DATE 03/22/2001
BY Helmy A. Kholer
PRODUCT CONTROL DIVISION
BUILDING CODE COMPLIANCE OFFICE
ACCEPTANCE NO. 00-0726.05

KNEZEVICH & ASSOCIATES, INC.
CONSULTING ENGINEERS • PRODUCT TESTING
1260 N. UNIVERSITY DRIVE, SUITE 180 • FORT LAUDERDALE, FL 33322
TEL: (954) 382-2800 • FAX: (954) 382-2989 • FLORIDA COA #3205
WEBSITE: WWW.KNEZEVICH.COM • E-MAIL: KA@KNEZEVICH.COM
COPYRIGHT © 2000 KNEZEVICH & ASSOCIATES, INC.

0.050" ALUMINUM STORM PANEL

American Building Products
5600 Jefferson Hwy, Bldg. W-2 Suite 248
Harahan, LA 70123
TEL888-734-9941/(504)734-9941
FAX(504) 734-5788

revisions

no	date	by	description
1	09/25/00	AS	GENERAL REVISION
2	02/21/01	JP	GENERAL NOTES/DETAILS U & V

V.J. KNEZEVICH
PROFESSIONAL ENGINEER
FL License No: PE 0010983
FEB 22 2001

date 06/21/00	
scale AS NOTED	drawn by AV
design by JP	checked by VJK

drawing no. 99-336
sheet 2 of 6

02/21/01 11:57

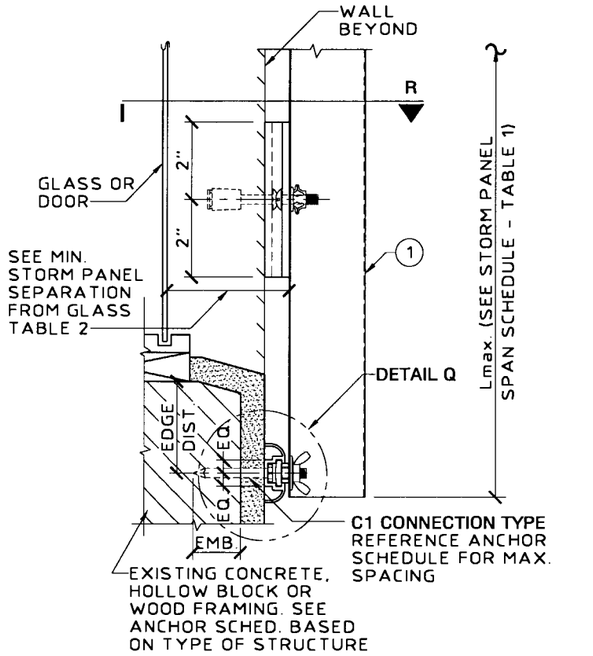

NOTE: USE OF DETAIL SHALL BE IN CONJUNCTION WITH AN " h " HEADER OR " U " HEADER TOP MOUNT

(P) C-TRACK ASSEMBLY - INSIDE MOUNT
SCALE: 3" = 1' - 0"

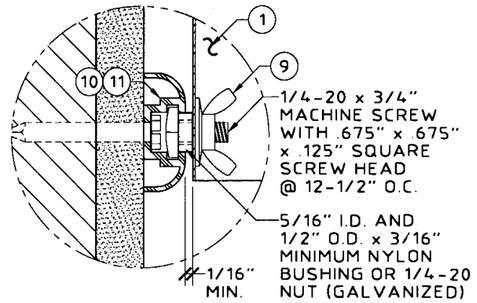

(Q) C-TRACK ASSEMBLY - (BLOW UP)
SCALE: HALF SIZE

NOTE: MAX. PANEL HEIGHT IS LIMITED TO 7'-6" AND MAX. DESIGN LOAD IS LIMITED TO ± 72 psf. THESE LIMITATIONS ARE APPLICABLE WHEN:

1. THE NYLON BUSHING OR 1/4-20 GALVANIZED NUT ARE USED, AS SHOWN ON DETAIL Q, AND
2. THE "Z" BAR IS USED TO PREVENT THE PANELS FROM SLIDING SIDEWAYS.

IF THE BUSHING OR 1/4-20 GALVANIZED NUT AND THE "Z" BAR ARE NOT USED, THEN THE ABOVE LIMITATIONS FOR PANEL HEIGHT AND FOR DESIGN LOAD ARE NOT APPLICABLE, AND THE PANEL HEIGHT AND THE DESIGN LOAD SHALL BE LIMITED TO THOSE SHOWN IN TABLE 1.

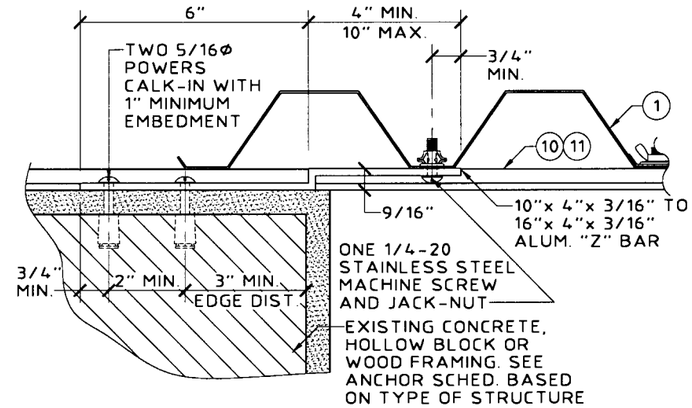

(R) PLAN VIEW C-TRACK ASSEMBLY - (USING LOCKING "Z" BAR)
SCALE: 3" = 1' - 0"

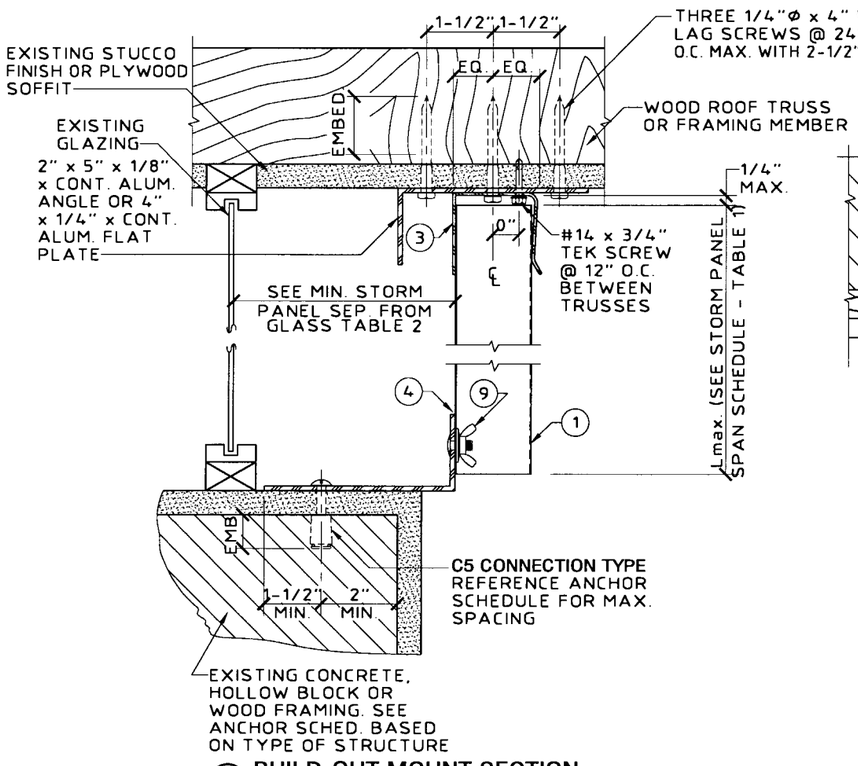

(S) BUILD-OUT MOUNT SECTION
SCALE: 3" = 1' - 0"

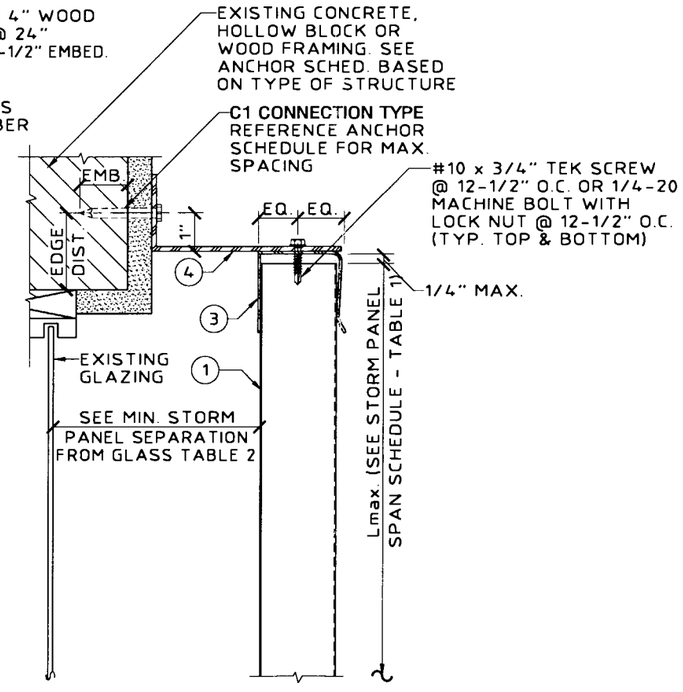

(T) BUILD-OUT MOUNT SECTION
SCALE: 3" = 1' - 0"

APPROVED AS COMPLYING WITH THE SOUTH FLORIDA BUILDING CODE
DATE 03/22/2001
BY Helmut A. Mehr
PRODUCT CONTROL DIVISION
BUILDING CODE COMPLIANCE OFFICE
ACCEPTANCE NO. 00-0726.05

KNEZEVICH & ASSOCIATES, INC.
CONSULTING ENGINEERS • PRODUCT TESTING
1280 N. UNIVERSITY DRIVE, SUITE 180 • FORT LAUDERDALE, FL 33322
TEL: (954) 382-2800 • FAX: (954) 382-2889 • FLORIDA COA #3205
WEBSITE: WWW.KNEZEVICH.COM • E-MAIL: KA@KNEZEVICH.COM
COPYRIGHT © 2000 KNEZEVICH & ASSOCIATES, INC.

0.050" ALUMINUM STORM PANEL

American Building Products

5600 Jefferson Hwy. Bldg. W-2 Suite 248
Harahan, LA 70123
TEL888-734-9941/(504)734-9941
FAX(504) 734-5788

revisions

no	date	by	description
1	09/25/00	AS	GENERAL REVISION
2	02/21/01	JP	GENERAL NOTES/DETAILS U & V

V.J. KNEZEVICH
PROFESSIONAL ENGINEER
FL License No: PE 0010983
FEB 22 2001

date 06/21/00	
scale AS NOTED	drawn by AV
design by JP	checked by VJK

drawing no. 99-336

sheet 3 of 6

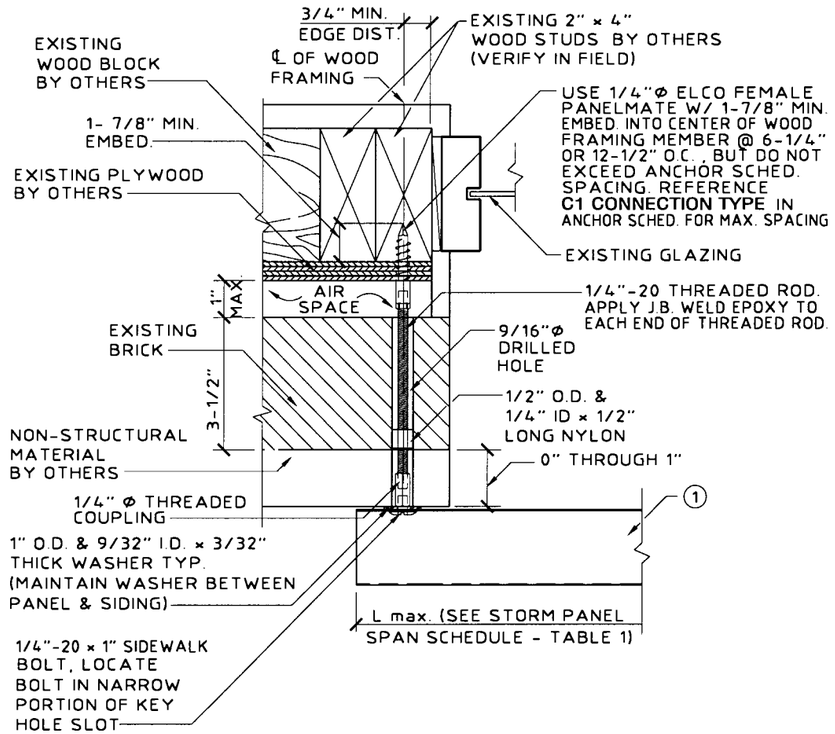

(U) DIRECT MOUNT INTO WOOD WITH BRICK FACADE

SCALE: 3" = 1' - 0"

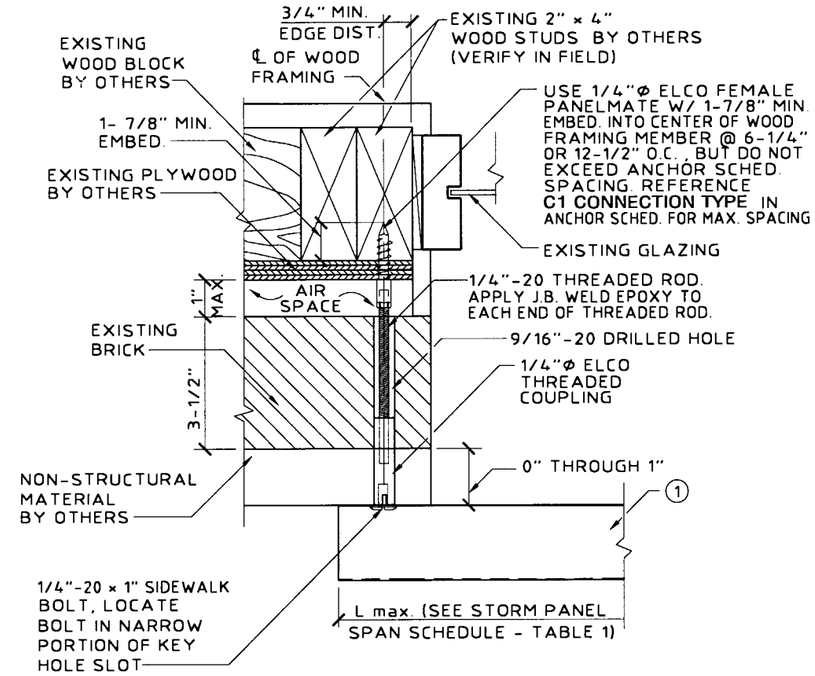

(V) DIRECT MOUNT INTO WOOD WITH BRICK FACADE

SCALE: 3" = 1' - 0"

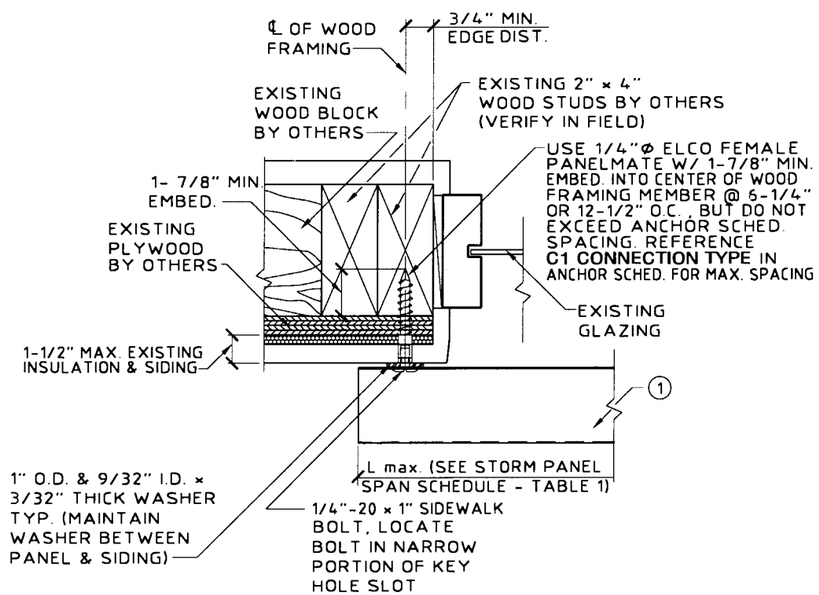

(W) DIRECT MOUNT INTO WOOD SECTION

SCALE: 3" = 1' - 0"

APPROVED AS COMPLYING WITH THE SOUTH FLORIDA BUILDING CODE
DATE 03/22/2001
BY Hedwig A. Weber
PRODUCT CONTROL DIVISION
BUILDING CODE COMPLIANCE OFFICE
ACCEPTANCE NO. 00-0726.05

KNEZEVICH & ASSOCIATES, INC.
CONSULTING ENGINEERS • PRODUCT TESTING
1260 N. UNIVERSITY DRIVE, SUITE 180 • FORT LAUDERDALE, FL 33322
TEL: (954) 382-2800 • FAX: (954) 382-2989 • FLORIDA COA #3205
WEBSITE: WWW.KNEZEVICH.COM • E-MAIL: KA@KNEZEVICH.COM
COPYRIGHT © 2000 KNEZEVICH & ASSOCIATES, INC.

0.050" ALUMINUM STORM PANEL

American Building Products
5600 Jefferson Hwy, Bldg. W-2 Suite 248
Harahan, LA 70123
TEL888-734-9941/(504)734-9941
FAX(504) 734-5788

revisions

no	date	by	description
1	09/25/00	AS	GENERAL REVISION
2	02/21/01	JP	GENERAL NOTES/DETAILS U & V

V.J. KNEZEVICH
PROFESSIONAL ENGINEER
FL License No: PE 0010983

FEB 22 2001

date 06/21/00
scale AS NOTED
drawn by AV
design by JP
checked by VJK
drawing no. 99-336
sheet 4 of 6

ANCHOR SCHEDULE

FASTENER MAXIMUM SPACING (INCHES) REQUIRED FOR VARIOUS DESIGN LOADS AND SPANS

MIN. 2" EDGE DISTANCE

EXISTING STRUCTURE	ANCHOR TYPE	LOAD (W) P.S.F. MAX. (SEE NOTE 1)	SPANS UP TO 6' - 0" (SEE NOTE 1)					SPANS UP TO 8' - 8" (SEE NOTE 1)					SPANS UP TO 11' - 1" (SEE NOTE 1)				
		CONNECTION TYPE (SEE NOTE 3)	1	2	3	4	5	1	2	3	4	5	1	2	3	4	5
CONCRETE	1/4"Ø ITW OR ELCO TAPCON W/ 1-3/4" MIN. EMBEDMENT (MIN. 3,000 P.S.I. CONCRETE)	48.0	12.5	12.5	12.5	12.5	12.5	12.5	12.5	12.5	12.5	12.5	12.5	9	10	12.5	12.5
		62.0	12.5	12.5	12.5	12.5	12.5	12.5	9	10	12.5	12.5	12.5	7	8	12.5	11
		72.0	12.5	12.5	12.5	12.5	12.5	12.5	7	8	12.5	11	12.5	7	8	12.5	11
		92.0	12.5	9	10	12.5	12.5	12.5	7	8	12.5	11	12.5	7	8	12.5	11
		230.0	12.5	7	8	12.5	11	12.5	7	8	12.5	11	12.5	7	8	12.5	11
	* 1/4"Ø POWERS CALK-IN W/ 7/8" EMBEDMENT & 1/4-20 STAINLESS STEEL MACHINE SCREW (MIN. 3,000 P.S.I. CONCRETE)	48.0	12.5	12.5	12.5	12.5	12.5	12.5	12.5	10	12.5	12.5	12.5	10	8	12.5	9
		62.0	12.5	12.5	11	12.5	12.5	12.5	10	8	12.5	9	12.5	7	7	12.5	8
		72.0	12.5	12.5	10	12.5	12	12.5	7	7	12.5	8	12.5	7	7	12.5	8
		92.0	12.5	9	8	12.5	9	12.5	7	7	12.5	8	12.5	7	7	12.5	8
		230.0	12.5	7	7	12.5	8	12.5	7	7	12.5	8	12.5	7	7	12.5	8
	* * 1/4"Ø ELCO MALE/ FEMALE "PANELMATE" W/ 1-3/4 MIN. EMBEDMENT & 1/4-20 MACHINE SCREW WITH NUT (MIN. 3,323 P.S.I. CONCRETE)	48.0	12.5	12.5	12.5	12.5	12.5	12.5	12.5	12.5	12.5	12.5	12.5	9	10	12.5	12.5
		62.0	12.5	12.5	12.5	12.5	12.5	12.5	8	10	12.5	12.5	12.5	6.25	9	12.5	12
		72.0	12.5	12.5	12.5	12.5	12.5	12.5	6.25	9	12.5	12	12.5	6.25	9	12.5	12
		92.0	12.5	8	10	12.5	12.5	12.5	6.25	9	12.5	12	12.5	6.25	9	12.5	12
		230.0	12.5	6.25	9	12.5	12	12.5	6.25	9	12.5	12	12.5	6.25	9	12.5	12
HOLLOW CONCRETE BLOCK	1/4"Ø ITW OR ELCO TAPCON W/ 1-1/4" EMBEDMENT	48.0	12.5	12.5	8	12.5	11	10	6.25	6	10	8	8	3	4	8	6.25
		62.0	12	9	6.25	12	9	8	3	4	8	6.25	7	[hatched]	4	7	5
		72.0	10	5	5	10	7	7	[hatched]	4	7	5	7	[hatched]	4	7	5
		92.0	8	3	4	8	6	7	[hatched]	4	7	5	7	[hatched]	4	7	5
		230.0	7	[hatched]	4	7	5	7	[hatched]	4	7	5	7	[hatched]	4	7	5
	* 1/4"Ø POWERS CALK-IN W/ 7/8" EMBEDMENT & 1/4-20 STAINLESS STEEL MACHINE SCREW	48.0	12.5	12.5	8	12.5	11	12.5	7	6	12.5	7	10	4	4	10	6
		62.0	12.5	11	6.25	12.5	8	10	4	4	10	6	9	3	4	9	5
		72.0	12.5	7	5	12.5	7	9	3	4	9	5	9	3	4	9	5
		92.0	10	4	4	10	5	9	3	4	9	5	9	3	4	9	5
		230.0	9	3	4	9	5	9	3	4	9	5	9	3	4	9	5
	* * 1/4"Ø ELCO MALE/ FEMALE "PANELMATE" W/ 1-1/4 MIN. EMBEDMENT & 1/4-20 MACHINE SCREW WITH NUT	48.0	12.5	12.5	10	12.5	12.5	12.5	9	7	12.5	9	12	5	5	12	7
		62.0	12.5	12.5	8	12.5	10	12	4	5	12	7	10	3	4	10	6
		72.0	12.5	8	6.25	12.5	8	10	3	4	10	6	10	3	4	10	6
		92.0	11	4	5	11	6.25	10	3	4	10	6	10	3	4	10	6
		230.0	10	3	4	10	6	10	3	4	10	6	10	3	4	10	6

MIN. 3" EDGE DISTANCE

EXISTING STRUCTURE	ANCHOR TYPE	LOAD (W) P.S.F. MAX. (SEE NOTE 1)	SPANS UP TO 6' - 0" (SEE NOTE 1)					SPANS UP TO 8' - 8" (SEE NOTE 1)					SPANS UP TO 11' - 1" (SEE NOTE 1)				
		CONNECTION TYPE (SEE NOTE 3)	1	2	3	4	5	1	2	3	4	5	1	2	3	4	5
CONCRETE	1/4"Ø ITW OR ELCO TAPCON W/ 1-3/4" MIN. EMBEDMENT (MIN. 3,000 P.S.I. CONCRETE)	48.0	12.5	12.5	12.5	12.5	12.5	12.5	12.5	12.5	12.5	12.5	12.5	10	12	12.5	12.5
		62.0	12.5	12.5	12.5	12.5	12.5	12.5	10	12	12.5	12.5	12.5	7	10	12.5	12.5
		72.0	12.5	12.5	12.5	12.5	12.5	12.5	7	10	12.5	12.5	12.5	7	10	12.5	12.5
		92.0	12.5	9	11	12.5	12.5	12.5	7	10	12.5	12.5	12.5	7	10	12.5	12.5
		230.0	12.5	7	10	12.5	12.5	12.5	7	10	12.5	12.5	12.5	7	10	12.5	12.5
	* 1/4"Ø POWERS CALK-IN W/ 7/8" EMBEDMENT & 1/4-20 STAINLESS STEEL MACHINE SCREW (MIN. 3,000 P.S.I. CONCRETE)	48.0	12.5	12.5	12.5	12.5	12.5	12.5	12.5	12.5	12.5	12.5	12.5	12.5	12.5	12.5	12.5
		62.0	12.5	12.5	12.5	12.5	12.5	12.5	12.5	12.5	12.5	12.5	12.5	9	11	12.5	12.5
		72.0	12.5	12.5	12.5	12.5	12.5	12.5	9	11	12.5	12.5	12.5	9	11	12.5	12.5
		92.0	12.5	12	12.5	12.5	12.5	12.5	9	11	12.5	12.5	12.5	9	11	12.5	12.5
		230.0	12.5	9	11	12.5	12.5	12.5	9	11	12.5	12.5	12.5	9	11	12.5	12.5
	* * 1/4"Ø ELCO MALE/ FEMALE "PANELMATE" W/ 1-3/4 MIN. EMBEDMENT & 1/4-20 MACHINE SCREW WITH NUT (MIN. 3,323 P.S.I. CONCRETE)	48.0	12.5	12.5	12.5	12.5	12.5	12.5	12.5	12.5	12.5	12.5	12.5	9	12.5	12.5	12.5
		62.0	12.5	12.5	12.5	12.5	12.5	12.5	9	12	12.5	12.5	12.5	6.25	10	12.5	12.5
		72.0	12.5	12.5	12.5	12.5	12.5	12.5	6.25	10	12.5	12.5	12.5	6.25	10	12.5	12.5
		92.0	12.5	8	12	12.5	12.5	12.5	6.25	10	12.5	12.5	12.5	6.25	10	12.5	12.5
		230.0	12.5	6.25	10	12.5	12.5	12.5	6.25	10	12.5	12.5	12.5	6.25	10	12.5	12.5
HOLLOW CONCRETE BLOCK	1/4"Ø ITW OR ELCO TAPCON W/ 1-1/4" EMBEDMENT	48.0	12.5	12.5	10	12.5	12.5	11	6.25	6.25	11	9	9	3	5	9	7
		62.0	12.5	9	7	12.5	10	9	3	5	9	7	7	[hatched]	4	7	6.25
		72.0	11	6.25	6.25	11	9	7	[hatched]	4	7	6.25	7	[hatched]	4	7	6.25
		92.0	8	3	5	8	7	7	[hatched]	4	7	6.25	7	[hatched]	4	7	6.25
		230.0	7	[hatched]	4	7	6.25	7	[hatched]	4	7	6.25	7	[hatched]	4	7	6.25
	* 1/4"Ø POWERS CALK-IN W/ 7/8" EMBEDMENT & 1/4-20 STAINLESS STEEL MACHINE SCREW	48.0	12.5	12.5	12.5	12.5	12.5	12.5	9	9	12.5	12.5	12.5	5	7	12.5	9
		62.0	12.5	12.5	10	12.5	12.5	12.5	5	7	12.5	9	11	4	6.25	11	8
		72.0	12.5	8	9	12.5	12	11	4	6.25	11	8	11	4	6.25	11	8
		92.0	12.5	5	7	12.5	9	11	4	6.25	11	8	11	4	6.25	11	8
		230.0	11	4	6.25	11	8	11	4	6.25	11	8	11	4	6.25	11	8
	* * 1/4"Ø ELCO MALE/ FEMALE "PANELMATE" W/ 1-1/4 MIN. EMBEDMENT & 1/4-20 MACHINE SCREW WITH NUT	48.0	12.5	12.5	12	12.5	12.5	12.5	9	8	12.5	11	12.5	5	6.25	12.5	8
		62.0	12.5	12.5	9	12.5	12	12	5	6.25	12	8	10	3	5	10	7
		72.0	12.5	8	8	12.5	10	10	3	5	10	7	10	3	5	10	7
		92.0	12	4	6.25	12	8	10	3	5	10	7	10	3	5	10	7
		230.0	10	3	5	10	7	10	3	5	10	7	10	3	5	10	7

ANCHOR SCHEDULE

FASTENER MAXIMUM SPACING (INCHES) REQUIRED FOR VARIOUS DESIGN LOADS AND SPANS

MIN. 3/4" EDGE DISTANCE

EXISTING STRUCTURE	ANCHOR TYPE	LOAD (W) P.S.F. MAX. (SEE NOTE 1)	SPANS UP TO 6' - 0" (SEE NOTE 1)					SPANS UP TO 8' - 8" (SEE NOTE 1)					SPANS UP TO 11' - 1" (SEE NOTE 1)				
		CONNECTION TYPE (SEE NOTE 3)	1	2	3	4	5	1	2	3	4	5	1	2	3	4	5
WOOD	1-3/4" MIN. 1/4"Ø x MIN. 2-1/2" LONG LAG SCREW W/ MIN. 1-3/4" EMBEDMENT. SHEAR PERPENDICULAR OR PARALLEL TO WOOD GRAIN	48.0	12.5	12.5	10	12.5	11	12.5	12.5	7	12.5	8	12.5	10	5	12.5	6.25
		62.0	12.5	12.5	8	12.5	9	12.5	10	5	12.5	6.25	12.5	7	4	12.5	5
		72.0	12.5	12.5	7	12.5	7	12.5	7	4	12.5	5	12.5	7	4	12.5	5
		92.0	12.5	9	5	12.5	6	12.5	7	4	12.5	5	12.5	7	4	12.5	5
		230.0	12.5	7	4	12.5	5	12.5	7	4	12.5	5	12.5	7	4	12.5	5
	* * 1/4"Ø ELCO MALE/ FEMALE "PANELMATE" W/ 1-7/8" MIN. EMBEDMENT & 1/4-20 MACHINE SCREW WITH NUT	48.0	12.5	12.5	12.5	12.5	12.5	12.5	12.5	12	12.5	12.5	12.5	11	9	12.5	11
		62.0	12.5	12.5	12.5	12.5	12.5	12.5	11	9	12.5	11	12.5	8	8	12.5	9
		72.0	12.5	12.5	12	12.5	12.5	12.5	8	8	12.5	9	12.5	8	8	12.5	9
		92.0	12.5	10	9	12.5	11	12.5	8	8	12.5	9	12.5	8	8	12.5	9
		230.0	12.5	8	8	12.5	9	12.5	8	8	12.5	9	12.5	8	8	12.5	9

ANCHOR NOTES:

1. **SPANS AND LOADS SHOWN HERE ARE FOR DETERMINING ANCHOR SPACING ONLY. ALLOWABLE STORM PANEL SPANS FOR SPECIFIC LOADS MUST BE LIMITED TO THOSE SHOWN IN TABLE 1, SHEET 6.**
2. ENTER ANCHOR SCHEDULE BASED ON THE EXISTING STRUCTURE MATERIAL, ANCHOR TYPE AND EDGE DISTANCE. SELECT DESIGN LOAD GREATER THAN OR EQUAL TO NEGATIVE DESIGN LOAD ON SHUTTER AND SELECT SPAN GREATER THAN OR EQUAL TO SHUTTER SPAN.
3. SEE MOUNTING SECTION DETAILS FOR IDENTIFICATION OF CONNECTION TYPE.
4. EXISTING STRUCTURE MAY BE CONCRETE, HOLLOW BLOCK OR WOOD FRAMING. REFERENCE ANCHOR SCHEDULE FOR PROPER ANCHOR TYPE BASED ON TYPE OF EXISTING STRUCTURE.
5. ANCHORS SHALL BE INSTALLED IN ACCORDANCE WITH MANUFACTURERS' RECOMMENDATIONS.
6. MINIMUM EMBEDMENT AND EDGE DISTANCE EXCLUDES WALL FINISH OR STUCCO.
7. WHERE EXISTING STRUCTURE IS WOOD FRAMING, WOOD FRAMING CONDITIONS VARY. FIELD VERIFY THAT FASTENERS ARE INTO ADEQUATE WOOD FRAMING MEMBERS, NOT PLYWOOD. FASTENING TO PLYWOOD IS ACCEPTABLE ONLY FOR SIDE CLOSURE PIECES.
8. WHERE LAG SCREWS FASTEN TO NARROW FACE OF STUD FRAMING, FASTENER SHALL BE LOCATED IN CENTER OF NOMINAL 2" x 4" (MIN.) WOOD STUD. 3/4" EDGE DISTANCE IS ACCEPTABLE FOR WOOD FRAMING. WOOD STUD SHALL BE "SOUTHERN PINE" G=0.55 OR GREATER DENSITY. LAG SCREWS SHALL HAVE PHILLIPS PAN HEAD OR HEX HEAD.
9. MACHINE SCREWS SHALL HAVE MINIMUM OF 1/2" ENGAGEMENT OF THREADS IN BASE ANCHOR AND MAY HAVE EITHER A PAN HEAD, TRUSS HEAD, OR WAFER HEAD (SIDEWALK BOLT), U.O.N.
10. [hatched box] DESIGNATES ANCHOR CONDITIONS WHICH ARE NOT ACCEPTABLE USES.
11. * DESIGNATES ANCHORS WHICH ARE REMOVABLE BY REMOVING MACHINE SCREW, NUT OR WASHERED WINGNUT.

APPROVED AS COMPLYING WITH THE SOUTH FLORIDA BUILDING CODE
DATE 03/22/2001
BY [signature]
PRODUCT CONTROL DIVISION
BUILDING CODE COMPLIANCE OFFICE
ACCEPTANCE NO. 00-0726.05

KNEZEVICH & ASSOCIATES, INC.
CONSULTING ENGINEERS • PRODUCT TESTING
1260 N. UNIVERSITY DRIVE, SUITE 180 • FORT LAUDERDALE, FL 33322
TEL: (954) 382-2800 • FAX: (954) 382-2989 • FLORIDA COA #3205
WEBSITE: WWW.KNEZEVICH.COM • E-MAIL: KA@KNEZEVICH.COM

COPYRIGHT © 2000 KNEZEVICH & ASSOCIATES, INC.

0.050" ALUMINUM STORM PANEL

American Building Products
5600 Jefferson Hwy. Bldg. W-2 Suite 248
Harahan, LA 70123
TEL888-734-9941/ (504)734-9941
FAX(504) 734-5788

revisions			
no	date	by	description
1	09/25/00	AS	GENERAL REVISION
2	02/21/01	JP	GENERAL NOTES/DETAILS U & V

V.J. KNEZEVICH
PROFESSIONAL ENGINEER
FL License No: PE 0010983
FEB 22 2001

date 06/21/00	
scale AS NOTED	drawn by AV
design by JP	checked by VJK
drawing no. 99-336	
sheet 5 of 6	

02/21/01 12:09

TABLE 2

MINIMUM STORM PANEL SEPARATION FROM GLASS

POSITIVE DESIGN LOAD (W) (P.S.F.)	ACTUAL SPAN (L) (FT - IN)	COLUMN 1 MIN. SEP. FOR ALL INSTALLATIONS LESS THAN 30' ABOVE GRADE (INCHES)	COLUMN 2 MIN. SEP. FOR ALL INSTALLATIONS GREATER THAN 30' ABOVE GRADE (INCHES)
30.0	6-0	3 1/2	1 1/2
	8-8	3 1/2	1 7/8
	11-1	3 1/2	3
40.0	6-0	3 1/2	1 1/2
	8-8	3 1/2	2 1/8
	10-4	3 1/2	3
50.0	6-0	3 1/2	1 1/2
	8-8	3 1/2	2 3/8
	9-9	3 1/2	3
60.0	6-0	3 1/2	1 5/8
	8-8	3 1/2	2 1/2
	9-4	3 1/2	3
70.0	6-0	3 1/2	1 5/8
	8-8	3 1/2	2 3/4
	8-9	3 1/2	2 3/4

TABLE 1 NOTE:

1. ENTER TABLE 1 WITH NEGATIVE DESIGN LOAD TO DETERMINE MAX. PANEL LENGTH. POSITIVE LOADS LESS THAN OR EQUAL TO THE NEGATIVE LOAD ARE ACCEPTABLE. FOR DESIGN LOADS BETWEEN TABULATED VALUES. USE NEXT HIGHER LOAD OR LINEAR INTERPOLATION MAY BE USED TO DETERMINE ALLOWABLE SPANS.

TABLE 2 NOTE:

1. ENTER TABLE 2 WITH POSITIVE DESIGN LOAD TO DETERMINE MIN. STORM PANEL SEPARATION FROM GLASS.

TABLE 1

MAX. ALLOWABLE STORM PANEL SPAN SCHEDULE

NEG. DESIGN LOAD (P.S.F.)	SPAN (FT - IN)
30.0	11-1
35.0	10-8
40.0	10-4
45.0	10-0
50.0	9-9
55.0	9-6
60.0	9-4
62.0	9-3
65.0	9-1
70.0	8-9
72.0	8-7
75.0	8-3
80.0	7-9
90.0	6-10
100.0	6-2
110.0	5-7
120.0	5-2
130.0	4-9
140.0	4-5
150.0	4-1
160.0	3-10
170.0	3-7
180.0	3-5
190.0	3-3
200.0	3-1
210.0	2-11
220.0	2-9
230.0	2-8

APPROVED AS COMPLYING WITH THE
SOUTH FLORIDA BUILDING CODE
DATE 03/22/2001
BY
PRODUCT CONTROL DIVISION
BUILDING CODE COMPLIANCE OFFICE
ACCEPTANCE NO. 00-0726.05

KNEZEVICH & ASSOCIATES, INC.
CONSULTING ENGINEERS • PRODUCT TESTING
1260 N. UNIVERSITY DRIVE, SUITE 180 • FORT LAUDERDALE, FL 33322
TEL: (954) 382-2800 • FAX: (954) 382-2989 • FLORIDA COA #3205
WEBSITE: WWW.KNEZEVICH.COM • E-MAIL: KA@KNEZEVICH.COM

COPYRIGHT © 2000 KNEZEVICH & ASSOCIATES, INC.

0.050" ALUMINUM STORM PANEL

American Building Products
5600 Jefferson Hwy, Bldg. W-2 Suite 248
Harahan, LA 70123
TEL888-734-9941/(504)734-9941
FAX(504) 734-5788

revisions

no	date	by	description
1	09/25/00	AS	GENERAL REVISION
2	02/21/01	JP	GENERAL NOTES/DETAILS U & V

V.J. KNEZEVICH
PROFESSIONAL ENGINEER
FL License No: PE 0010983

FEB 22 2001

date 06/21/00
scale AS NOTED
drawn by AV
design by JP
checked by VJK
drawing no. 99-336
sheet 6 of 6