MIAMI-DADE

MIAMI-DADE COUNTY, FLORIDA
METRO-DADE FLAGLER BUILDING

BUILDING CODE COMPLIANCE OFFICE
METRO-DADE FLAGLER BUILDING
140 WEST FLAGLER STREET, SUITE 1603
MIAMI, FLORIDA 33130-1563
(305) 375-2901 FAX (305) 375-2908

CONTRACTOR LICENSING SECTION
(305) 375-2527 FAX (305) 375-2558

CONTRACTOR ENFORCEMENT DIVISION
(305) 375-2966 FAX (305) 375-2908

PRODUCT CONTROL DIVISION
(305) 375-2902 FAX (305) 372-6339

PRODUCT CONTROL NOTICE OF ACCEPTANCE

Andersen Corporation
100 Fourth Avenue North
Bayport ,MN 55003-1096

Your application for Notice of Acceptance (NOA) of:
Series"Springline" Alum-clad Round-Top Wood Fixed Window
under Chapter 8 of the Code of Miami-Dade County governing the use of Alternate Materials and Types of Construction, and completely described herein, has been recommended for acceptance by the Miami-Dade County Building Code Compliance Office (BCCO) under the conditions specified herein.

This NOA shall not be valid after the expiration date stated below. BCCO reserves the right to secure this product or material at any time from a jobsite or manufacturer's plant for quality control testing. If this product or material fails to perform in the approved manner, BCCO may revoke, modify, or suspend the use of such product or material immediately. BCCO reserves the right to revoke this approval, if it is determined by BCCO that this product or material fails to meet the requirements of the South Florida Building Code.

The expense of such testing will be incurred by the manufacturer.

ACCEPTANCE NO.: 00-0801.03
EXPIRES: 02/07/2007

Raul Rodriguez
Chief Product Control Division

THIS IS THE COVERSHEET, SEE ADDITIONAL PAGES FOR SPECIFIC AND GENERAL CONDITIONS
BUILDING CODE & PRODUCT REVIEW COMMITTEE

This application for Product Approval has been reviewed by the BCCO and approved by the Building Code and Product Review Committee to be used in Miami-Dade County, Florida under the conditions set forth above.

Francisco J. Quintana, R.A.
Director
Miami-Dade County
Building Code Compliance Office

APPROVED: 02/07/2002

Andersen Corporation

ACCEPTANCE No.: 00-0801.03

APPROVED : February 07, 2002

EXPIRES : February 07, 2007

NOTICE OF ACCEPTANCE: SPECIFIC CONDITIONS

1. SCOPE

1.1 This approves a wood fixed window as described in Section 2 of this Notice of Acceptance, designed to comply with the South Florida Building Code, (SFBC), 1994 Edition for Miami-Dade County, for the locations where the pressure requirements, as determined by SFBC Chapter 23, do not exceed the Design Pressure Rating values indicated in the approved drawings.

2. PRODUCT DESCRIPTION

2.1 The "**Springline" Series, Aluminum Clad Round Top Wood Fixed Windows** and its components shall be constructed in strict compliance with the following document: Drawing No. **DADE-12000,** titled "Unit Assembly, Springline", Sheets 1 thru 4 of 4, dated 07/31/00 latest revised on 01-08-2002, prepared by manufacturer, bearing the Miami-Dade County Product Control approval stamp with the Notice of Acceptance number and approval date by the Miami-Dade County Product Control Division. These documents shall hereinafter be referred to as the approved drawings.

3. LIMITATIONS

3.1 This approval applies to single unit applications of round-top wood fixed window, as shown in approved drawings.

4. INSTALLATION

4.1 The wood fixed window and its components shall be installed in strict compliance with the approved drawings.

4.2 Hurricane protection system (shutters): the installation of this unit **will require** a hurricane protection system.

5. LABELING

5.1 Each unit shall bear a permanent label with the manufacturer's name or logo, city, state and following statement: "Miami-Dade County Product Control Approved".

6. BUILDING PERMIT REQUIREMENTS

6.1 Application for building permit shall be accompanied by two copies of the following:

- **6.1.1** This Notice of Acceptance.
- **6.1.2** Duplicate copies of the approved drawings, as identified in section 2 of this Notice of Acceptance, clearly marked to show the components selected for the proposed installation.
- **6.1.3** Any other documents required by the Building Official or the South Florida Building Code (SFBC) in order to properly evaluate the installation of this system.

Ishaq I. Chanda

Ishaq I. Chanda, P.E. Product Control Examiner
Product Control Division

Andersen Corporation

ACCEPTANCE No.: 00-0801.03

APPROVED : February 07, 2002

EXPIRES : February 07, 2007

NOTICE OF ACCEPTANCE: EVIDENCE SUBMITTED

1. Renewal of this Acceptance (approval) shall be considered after a renewal application has been filed and the original submitted documentation, including test supporting data, engineering documents, are no older than eight (8) years.

2. Any and all approved products shall be permanently labeled with the manufacturer's name, city, state, and the following statement: "Miami-Dade County Product Control Approved", or as specifically stated in the specific conditions of this Acceptance.

3. Renewals of Acceptance will not be considered if:
   a) There has been a change in the South Florida Building Code affecting the evaluation of this product and the product is not in compliance with the code changes;
   b) The product is no longer the same product (identical) as the one originally approved.
   c) If the Acceptance holder has not complied with all the requirements of this acceptance, including the correct installation of the product;
   d) The engineer who originally prepared, signed and sealed the required documentation initially submitted, is no longer practicing the engineering profession.

4. Any revision or change in the materials, use, and/or manufacture of the product or process shall automatically be cause for termination of this Acceptance, unless prior written approval has been requested (through the filing of a revision application with appropriate fee) and granted by this office.

5. Any of the following shall also be grounds for removal of this Acceptance:
   a) Unsatisfactory performance of this product or process;
   b) Misuse of this Acceptance as an endorsement of any product, for sales, advertising or any other purpose.

6. The Notice of Acceptance number preceded by the words Dade County, Florida, and followed by the expiration date may be displayed in advertising literature. If any portion of the Notice of Acceptance is displayed, then it shall be done in its entirety.

7. A copy of this Acceptance as well as approved drawings and other documents, where it applies, shall be provided to the user by the manufacturer or its distributors and shall be available for inspection at the job site at all times. The engineer does not need to reseal the copies.

8. Failure to comply with any section of this Acceptance shall be cause for termination and removal of Acceptance.

8. This Acceptance contains pages 1, 2, this last page 3.

Ishaq I. Chanda

Ishaq I. Chanda, P.E. Product Control Examiner
Product Control Division

END OF THIS ACCEPTANCE

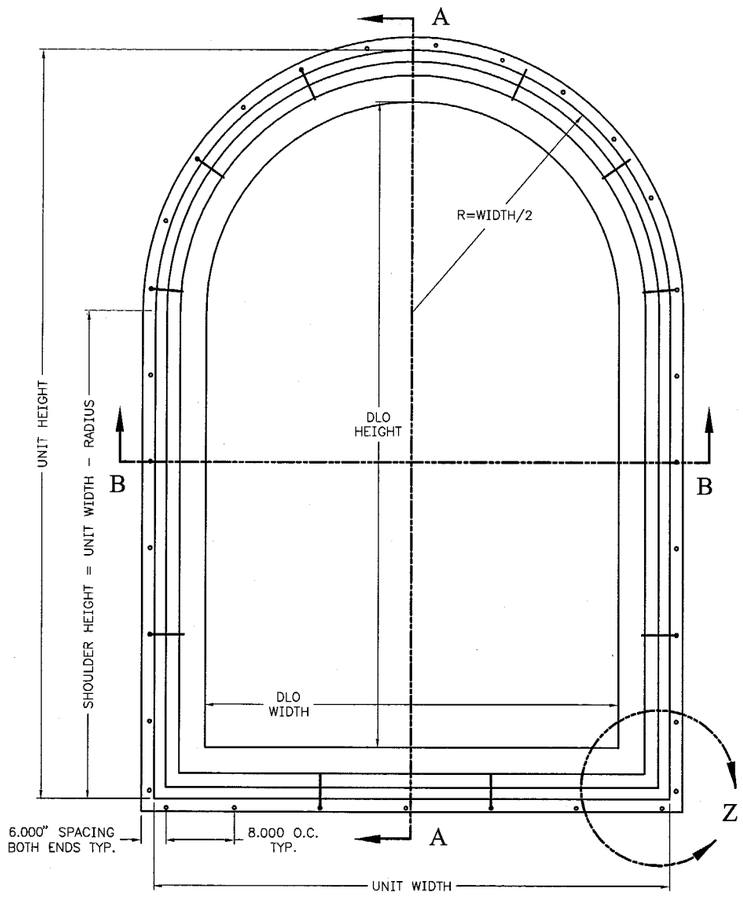

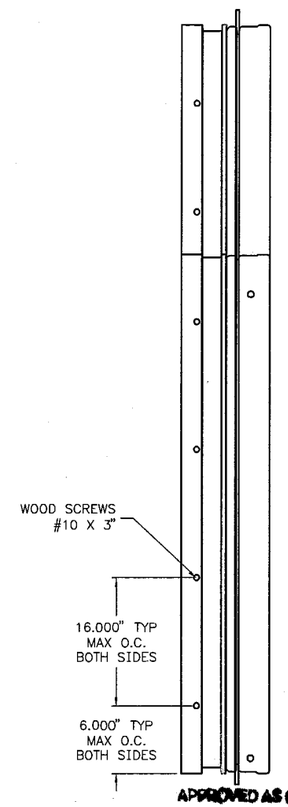

APPROVED AS COMPLYING WITH THE
SOUTH FLORIDA BUILDING CODE
DATE February 07, 2002
BY Ishaq I. Chanda
PRODUCT CONTROL DIVISION
BUILDING CODE COMPLIANCE OFFICE
ACCEPTANCE NO. 00-0801.03

DESIGH PRESSURE RATING

±65 PSF

	ELFW6006	+65/−65	36.812	71.250	33.500	67.938	32.062	66.500
	ELFW601	+65/−65	42.812	71.250	39.500	67.938	38.062	66.500
	ELFW602	+65/−65	54.937	71.250	51.625	67.938	50.187	66.500
	ELFW8006	+65/−65	47.562	95.125	44.250	91.813	42.812	90.375
	ELFW801	+65/−65	53.562	95.125	50.250	91.813	48.812	90.375
	ELFW802	+65/−65	65.687	95.125	62.375	91.813	60.937	90.375
	SE3016	+65/−65	24.750	37.500	21.438	34.188	20.000	32.750
	SE311	+65/−65	30.750	37.500	27.438	34.188	26.000	32.750
	SE312	+65/−65	42.875	37.500	39.563	34.188	38.125	32.750
	SE313	+65/−65	54.687	37.500	51.375	34.188	49.937	32.750
	SE3135	+65/−65	59.562	37.500	56.250	34.188	54.812	32.750
	SE314	+65/−65	66.750	37.500	63.438	34.188	62.000	32.750
	SE3145	+65/−65	71.562	37.500	68.250	34.188	66.812	32.750
	SE315	+65/−65	78.625	37.500	75.313	34.188	73.875	32.750
	SE3155	+65/−65	83.562	37.500	80.250	34.188	78.812	32.750
	SE316	+65/−65	90.625	37.500	87.313	34.188	85.875	32.750
	SE5406	+65/−65	38.250	64.500	34.938	61.188	33.500	59.750
	SE541	+65/−65	44.250	64.500	40.938	61.188	39.500	59.750
	SE542	+65/−65	56.375	64.500	53.063	61.188	51.625	59.750
	SE543	+65/−65	68.187	64.500	64.875	61.188	63.437	59.750
	SE5435	+65/−65	73.062	64.500	69.750	61.188	68.312	59.750
	SE544	+65/−65	80.250	64.500	76.938	61.188	75.500	59.750
	SE5445	+65/−65	85.062	64.500	81.750	61.188	80.312	59.750
	SE545	+65/−65	92.125	64.500	88.813	61.188	87.375	59.750
	SE5455	+65/−65	97.062	64.500	93.750	61.188	92.312	59.750
	SE546	+65/−65	104.125	64.500	100.813	61.188	99.375	59.750
	SE5806	+65/−65	40.250	68.500	36.938	65.188	35.500	63.750
	SE581	+65/−65	46.250	68.500	42.938	65.188	41.500	63.750
	SE582	+65/−65	58.375	68.500	55.063	65.188	53.625	63.750
	SE583	+65/−65	70.187	68.500	66.875	65.188	65.437	63.750
	SE5835	+65/−65	75.062	68.500	71.750	65.188	70.312	63.750
	SE584	+65/−65	82.250	68.500	78.938	65.188	77.500	63.750
	SE5845	+65/−65	87.062	68.500	83.750	65.188	82.312	63.750
	SE585	+65/−65	94.125	68.500	90.813	65.188	89.375	63.750
*	SE5855	+65/−65	99.062	68.500	95.750	65.188	94.312	63.750
	SE586	+65/−65	106.125	68.500	102.813	65.188	101.375	63.750
	SE6006	+65/−65	42.000	72.000	38.688	68.688	37.250	67.250
	SE601	+65/−65	48.000	72.000	44.688	68.688	43.250	67.250
	SE602	+65/−65	60.125	72.000	56.813	68.688	55.375	67.250
	SE603	+65/−65	71.937	72.000	68.625	68.688	67.187	67.250
	SE6035	+65/−65	76.812	72.000	73.500	68.688	72.062	67.250
	SE604	+65/−65	84.000	72.000	80.688	68.688	79.250	67.250
	SE6045	+65/−65	88.812	72.000	85.500	68.688	84.062	67.250
	SP402	+65/−65	48.125	48.000	44.813	44.688	43.375	43.250
	SP403	+65/−65	59.937	48.000	56.625	44.688	55.187	43.250
	SP4035	+65/−65	64.812	48.000	61.500	44.688	60.062	43.250
	SP404	+65/−65	72.000	48.000	68.688	44.688	67.250	43.250
	SP4045	+65/−65	76.812	48.000	73.500	44.688	72.062	43.250
	SP405	+65/−65	83.875	48.000	80.563	44.688	79.125	43.250
	SP4055	+65/−65	88.812	48.000	85.500	44.688	84.062	43.250
	SP406	+65/−65	95.875	48.000	92.563	44.688	91.125	43.250
	SP8006	+65/−65	54.000	96.000	50.688	92.688	49.250	91.250
	SP801	+65/−65	60.000	96.000	56.688	92.688	55.250	91.250
*	SP802	+65/−65	72.125	96.000	68.813	92.688	67.375	91.250
	UNIT DES	DP RATING (PSF)	HEIGHT	WIDTH	GLASS HEIGHT	GLASS WIDTH	DLO HEIGHT	DLO WIDTH
			UNIT DIMENSIONS		GLASS DIMENSIONS		DAYLIGHT OPENING	

* INDICATES TESTED UNITS

NOTES:

1. INSTALLATION METHODS:
   THE UNITS TO BE INSTALLED WITHIN A GRADE 2 SPF 2" X 6" WOOD BUCK. THE NAILING FLANGE TO BE FASTENED TO THE PLYWOOD WITH 1-3/4" ROOFING NAILS SPACED 8" ON CENTER. THE WINDOWS WERE ADDITIONALLY SECURED TO THE FRAME WITH #10 BY 3" LONG SCREWS SPACED 6" FROM CORNERS AND 16" ON CENTER.

2. STRUCTURAL DESIGN PRESSURE RATINS = +65/-65 PSF.

3. GLAZING SPECIFICATIONS:
   THE UNITS UTILIZE 1.000" (3958 STANDARD) THICK INSULATED GLASS FABRICATED & COMPOSED OF TWO NOMINAL 1/4" (.223 STANDARD) TEMPERED SHEETS SEPERATED BY A DESICANT-FILLED SPACER.

   GLAZING METHOD:
   GLASS IS SET FROM THE INTERIOR AGAINST THE GE 2821 SILICONE BACK BEDDING. A VINYL SPACER WAS PLACED AROUD THE ENTIRE PERIMETER AND A GE 2822 SILICONE FILLET BEAD WAS APPLIED ON THE EXTERIOR. WOOD STOPS POSITIONED AT THE INTERIOR WERE SECURED WITH 1-1/2" LONG, 15-GAUGE NAILS SPACED 8" ON CENTER.

4. FRAME CONSTRUCTION:
   FRAME MEMBERS CONSISTED OF MOLDED PINE WITH AN EXTERIOR STRETCHED FORMED ALUMINUM CLADDING. CORNERS WERE MITER CUT, SEALED WITH SILICONE AND SECURED TO THE WOOD WITH THREE 2" LONG FLAT-HEAD SCREWS PER CORNER. INJECTION-MOLDED PLASTIC CORNER KEYS WERE POSITIONED AT EACH CORNER, SECURING THE CLADDING. TWO 5/8" STAINLESS STEEL SCREWS PER CORNER SECURED THE CLADDING AND THE CORNER KEYS.

5. GLASS BITE = .750".

6. MIAMI DADE COUNTY APPROVED SHUTTERS REQUIRED FOR INSTALLATION OF THESE UNITS.

C	1/8/02
B	12/5/01
A	7/31/00
REVISION	

TITLE
UNIT ASSEMBLY, SPRINGLINE
NON-IMPACT

Andersen Corporation
Bayport, Minnesota 55003

THESE DRAWINGS ARE PROVIDED AS A SERVICE BY ANDERSEN CORPORATION FOR THE BENEFIT OF ITS CUSTOMERS. FINAL RESPONSIBILITY FOR ACCURACY OF DESIGN, FINAL SPECIFICATIONS, DRAWINGS AND FOR THE ACTUAL INSTALLATION SUGGESTED BY THESE DRAWINGS LIES WITH THE ARCHITECT, ENGINEER AND/OR CONTRACTOR.

COPYRIGHT ANDERSEN CORPORATION 1998. ALL RIGHTS RESERVED.

APPROVE/DATE 7/31/00

DRAWING NUMBER DADE-12000

SHT. 1 OF 4

ITEM	QTY.	DESCRIPTION	LOCATION
19	A/R	NAIL, 1-3/4" ROOFING	FASTENS NAILING FLANGE TO BUCK
10	BEAD	BED GLAZ. & BACK GLAZ.	SEALS GLASS TO FRAME
–	BEAD	SLICONE SEALANT	SEALS MITERED JAMB CORNERS
12	BEAD	SILICONE SEALANT	FILLET BEAD GLASS TO FRAME COVER
6	A/R	NAILS, 1-1/2" X 16 GA 8" O.C	FASTENS GLASS STOPS TO FRAME
4	4	STAPLES, 3/8" X 1/2"	FASTENS ARCH FRAME COVER TO FRAME
17	4	(2) SCREWS, #8 X 5/8"/CORNER	FASTENS CORNERLOCKS TO FRAME
13	4	SCREW, #8 X 5/8"	FASTENS CORNER KEY IN CORNERS

FRAME FASTENERS LIST

ITEM NO.	DESCRIPTION	DRAWING	MATERIAL	HEIGHT	WIDTH
19	NAIL, 1-3/4" ROOFING	–	GALVANIZED STEEL	1.750	0.140
18	COVER, JAMB/SILL .080" THINK	12004	ALUMINUM	2.390	3.145
17	WOOD SCREW, #10 X 3"	3621330	STEEL	–	–
16	FLANGE, SIDE & SILL	24136	VINYL	1.644	0.430
15	FLANGE, HEAD	11080	VINYL	1.644	0.430
14	CORNERLOCK – 90°	11029	DELRIN	1.750	1.750
13	SCREW, #8 X 5/8"	3621000	STAINLESS STEEL	–	–
12	SEALANT, SILICONE FILLET GE 2822	MDS0034	SEALAENT	–	–
11	SPACER, GLASS LATERAL	11084	VINYL	0.125	0.250
10	SEALANT, SILICONE GE 2821	MDS0012	SEALANT	–	–
9	JAMB, SILL/SIDE	12006	PINE	1.391	2.500
8	STOP, SILL & SIDE GLASS	12015	PINE	1.000	0.719
7	GLASS, INSULATED	00055	1.000" OVERALL	–	–
6	NAIL, 1-1/2" X 16 GA.	4220149	STEEL	–	–
5	SPACER, GLASS SETTING BLOCK	20065	VINYL	1.000	0.425
4	STAPLE, 3/8" X 1/2"	4220180	STEEL	–	–
3	STOP, HEAD ARCH GLASS	12015	PINE	1.000	0.719
2	JAMB, HEAD ARCH	12006	PINE	1.391	2.531
1	COVER, HEAD ALUMINUM ARCH (.080 THICK)	12001	ALUMINUM	2.359	1.859

DRAWING REFERANCE LIST

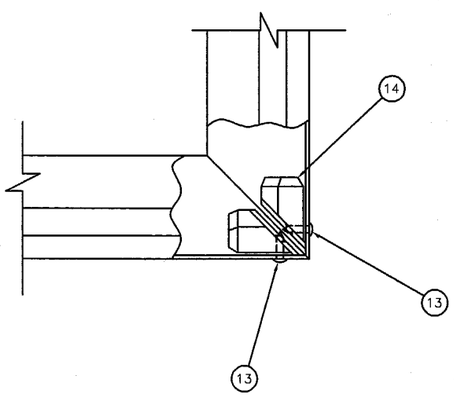

VIEW "Z"

APPROVED AS COMPLYING WITH THE
SOUTH FLORIDA BUILDING CODE
DATE Feb 07, 2002
BY Ishaq I. Chanda
PRODUCT CONTROL DIVISION
BUILDING CODE COMPLIANCE OFFICE
ACCEPTANCE NO. 00-0801.03

REVISION	
C	1/8/02
B	12/5/01
A	7/31/00

TITLE
UNIT ASSEMBLY, SPRINGLINE
NON-IMPACT

Andersen Corporation
Bayport, Minnesota 55003

THESE DRAWINGS ARE PROVIDED AS A SERVICE BY ANDERSEN CORPORATION FOR THE BENEFIT OF ITS CUSTOMERS. FINAL RESPONSIBILITY FOR ACCURACY OF DESIGN, FINAL SPECIFICATIONS, DRAWINGS AND FOR THE ACTUAL INSTALLATION SUGGESTED BY THESE DRAWINGS LIES WITH THE ARCHITECT, ENGINEER AND/OR CONTRACTOR.

COPYRIGHT ANDERSEN CORPORATION 1998. ALL RIGHTS RESERVED.

APPROVE/DATE 7/31/00

DRAWING NUMBER DADE-12000

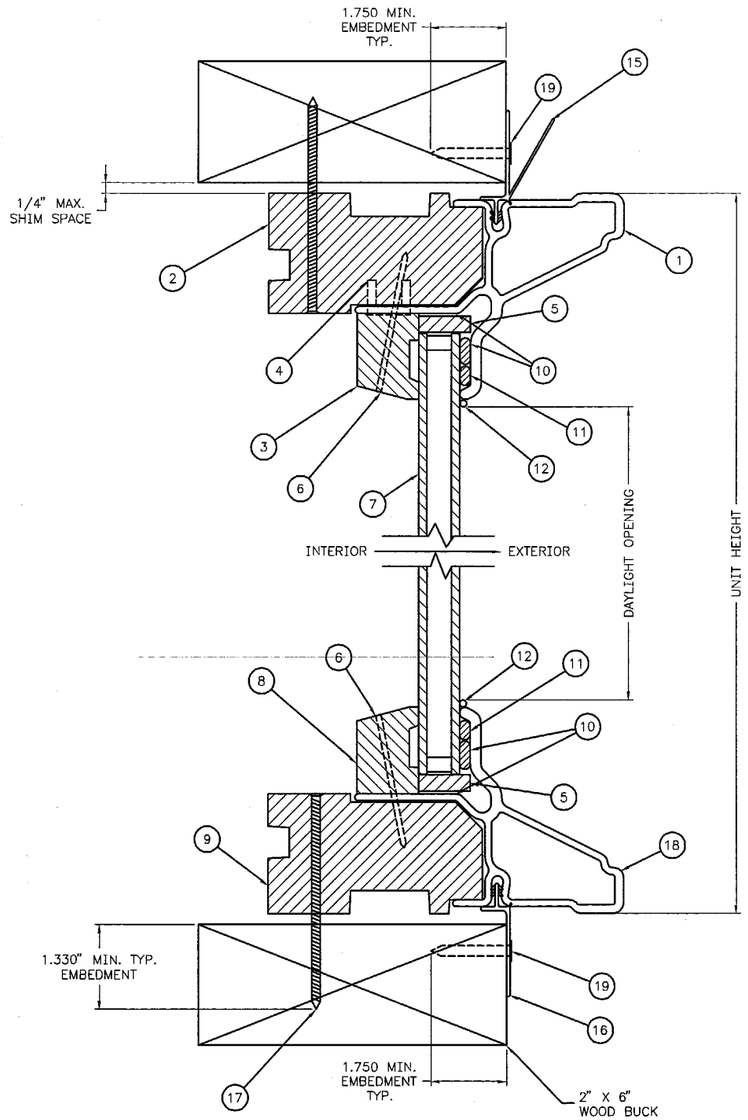

SECTION A-A

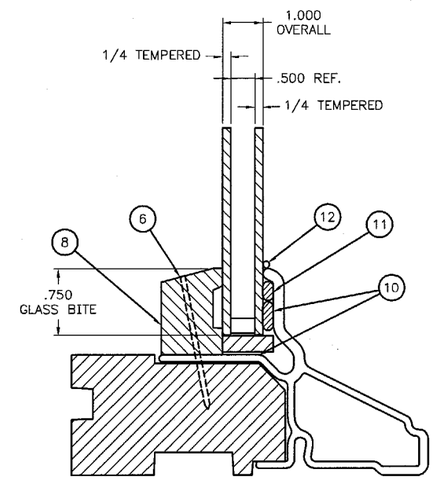

DOUBLE PANE, TEMPERED/TEMPERED
GLASS CONSTRUCTION

APPROVED AS COMPLYING WITH THE
SOUTH FLORIDA BUILDING CODE
DATE Feb 07, 2002
BY Ishaq I. Chanda
PRODUCT CONTROL DIVISION
BUILDING CODE COMPLIANCE OFFICE
ACCEPTANCE NO. 00-0801.03

C	1/8/02
B	12/5/01
A	7/31/00
REVISION	

TITLE
UNIT ASSEMBLY, SPRINGLINE
NON-IMPACT

Andersen Corporation
Bayport, Minnesota 55003

THESE DRAWINGS ARE PROVIDED AS A SERVICE BY ANDERSEN CORPORATION FOR THE BENEFIT OF ITS CUSTOMERS. FINAL RESPONSIBILITY FOR ACCURACY OF DESIGN, FINAL SPECIFICATIONS, DRAWINGS AND FOR THE ACTUAL INSTALLATION SUGGESTED BY THESE DRAWINGS LIES WITH THE ARCHITECT, ENGINEER AND/OR CONTRACTOR.

COPYRIGHT ANDERSEN CORPORATION 1998. ALL RIGHTS RESERVED.

APPROVE/DATE 7/31/00

DRAWING NUMBER DADE-12000

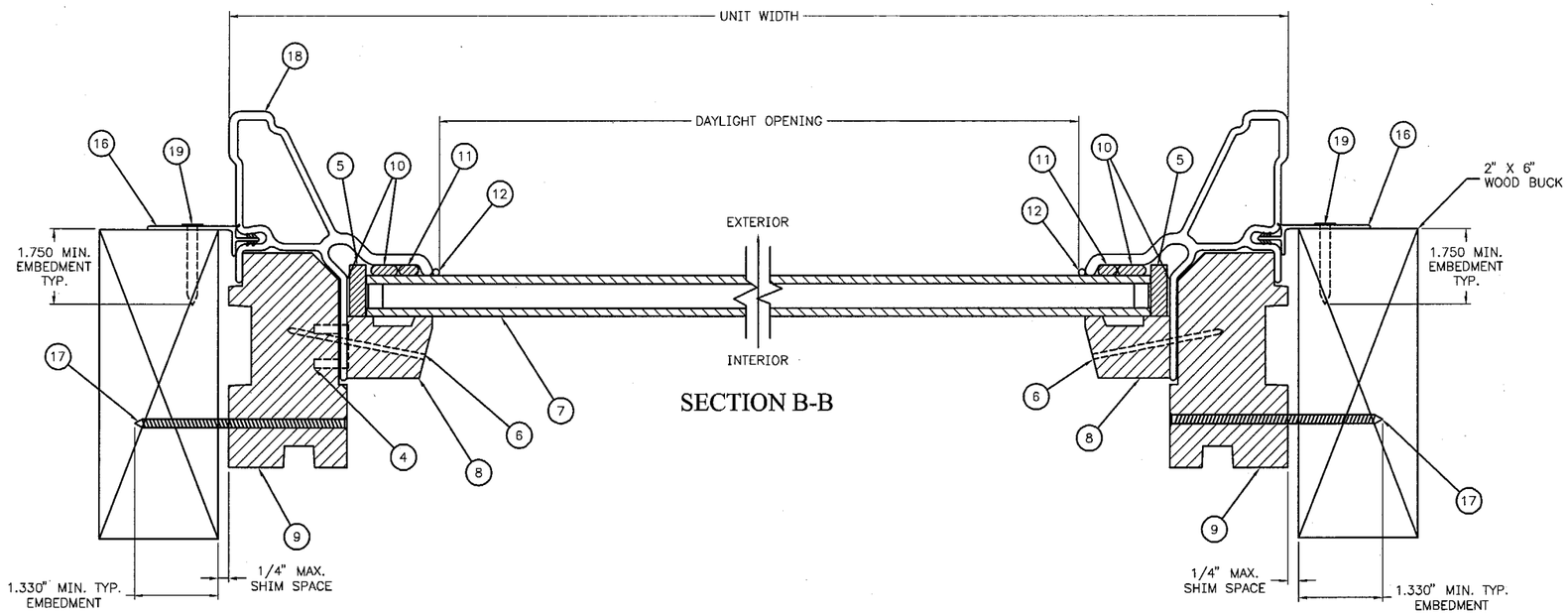

SECTION B-B

APPROVED AS COMPLYING WITH THE
SOUTH FLORIDA BUILDING CODE
DATE February 07, 2002
BY Ishaq I. Chanda
PRODUCT CONTROL DIVISION
BUILDING CODE COMPLIANCE OFFICE
ACCEPTANCE NO. 00-0801.03

REVISION	
C	1/8/02
B	12/5/01
A	7/31/00

TITLE
UNIT ASSEMBLY, SPRINGLINE
NON-IMPACT

Andersen Corporation
Bayport, Minnesota 55003

THESE DRAWINGS ARE PROVIDED AS A SERVICE BY ANDERSEN CORPORATION FOR THE BENEFIT OF ITS CUSTOMERS. FINAL RESPONSIBILITY FOR ACCURACY OF DESIGN, FINAL SPECIFICATIONS, DRAWINGS AND FOR THE ACTUAL INSTALLATION SUGGESTED BY THESE DRAWINGS LIES WITH THE ARCHITECT, ENGINEER AND/OR CONTRACTOR.

COPYRIGHT ANDERSEN CORPORATION 1996. ALL RIGHTS RESERVED.

APPROVE/DATE 7/31/00

DRAWING NUMBER DADE-12000

SHT. 4 OF 4