MIAMI-DADE COUNTY, FLORIDA
METRO-DADE FLAGLER BUILDING

BUILDING CODE COMPLIANCE OFFICE
METRO-DADE FLAGLER BUILDING
140 WEST FLAGLER STREET, SUITE 1603
MIAMI, FLORIDA 33130-1563
(305) 375-2901 FAX (305) 375-2908

CONTRACTOR LICENSING SECTION
(305) 375-2527 FAX (305) 375-2558

CONTRACTOR ENFORCEMENT DIVISION
(305) 375-2966 FAX (305) 375-2908

PRODUCT CONTROL DIVISION
(305) 375-2902 FAX (305) 372-6339

PRODUCT CONTROL NOTICE OF ACCEPTANCE

Guardian Fiberglass, Inc.
1000 East North Street
Albion ,MI 49224

Your application for Notice of Acceptance (NOA) of:
Fiberglass Batt, Blanket, and loosefill
under Chapter 8 of the Code of Miami-Dade County governing the use of Alternate Materials and Types of Construction, and completely described herein, has been recommended for acceptance by the Miami-Dade County Building Code Compliance Office (BCCO) under the conditions specified herein.

This NOA shall not be valid after the expiration date stated below. BCCO reserves the right to secure this product or material at any time from a jobsite or manufacturer's plant for quality control testing. If this product or material fails to perform in the approved manner, BCCO may revoke, modify, or suspend the use of such product or material immediately. BCCO reserves the right to revoke this approval, if it is determined by BCCO that this product or material fails to meet the requirements of the South Florida Building Code.

The expense of such testing will be incurred by the manufacturer.

ACCEPTANCE NO.: 00-0801.06
EXPIRES: 11/09/2003

Raul Rodriguez
Chief Product Control Division

THIS IS THE COVERSHEET, SEE ADDITIONAL PAGES FOR SPECIFIC AND GENERAL CONDITIONS
BUILDING CODE & PRODUCT REVIEW COMMITTEE

This application for Product Approval has been reviewed by the BCCO and approved by the Building Code and Product Review Committee to be used in Miami-Dade County, Florida under the conditions set forth above.

Francisco J. Quintana, R.A.
Director
Miami-Dade County
Building Code Compliance Office

APPROVED: 11/09/2000

Guardian Fiberglass, Inc.

ACCEPTANCE NO: 00-0801.06

APPROVED: NOV 0 9 2000

EXPIRES: NOV 0 9 2003

NOTICE OF ACCEPTANCE: SPECIFIC CONDITIONS

1. SCOPE

1.1 This approves mineral fiberglass batt, blanket and loose fill insulation described in Section 2 of this Notice of Acceptance designed to comply with the South Florida Building Code, 1994 Edition for Miami-Dade County (SFBC) and the Standard Specifications for Mineral Fiber Blanket Thermal and Loose-Fill Thermal Insulation per ASTM C 665 & 764.

2. PRODUCT DESCRIPTION

2.1 **The Guardian Fiberglass Batt, Blanket and Loose-Fill** insulation shall be fabricated in strict compliance with the following document: Drawing No. B-051000, titled "Wall Cavity, Attic and Wall Application", Sheet 1 through 3 of 3, dated 09/21/00, with no revisions signed and sealed by D. W. Yarbrough, PE. It bears the Miami Dade County Product Control approval stamp with the Notice of Acceptance number and approval date by the Miami-Dade County Product Control Division. These documents shall herein after be referred to as the approved drawings.

3. LIMITATIONS

3.1 This insulation system may be used within fire rated assemblies if such assemblies are tested in accordance with ASTM E-119 or if protected by an approved automatic fire extinguishing system

4. INSTALLATION

4.1 This insulation system shall be installed in strict compliance with the requirements of the SFBC and the manufacturers published instructions.

5. LABELING

5.1 Each bag or roll shall bear a permanent label with the manufacturer's name or logo, city, state and the following statement "Dade County Product Control Approved".

6. BUILDING PERMIT REQUIREMENTS

6.1 Application for Building Permit shall be accompanied by copies of the following:

6.1.1 This Notice of Acceptance

6.1.2 Duplicate copies of the approved drawings, as identified in Section 2 of this Notice of Acceptance

6.1.3 Any other document required by the Building Official or the SFBC in order to properly evaluate the installation of this system

Candido Font, PE, Sr. Product Control Examiner
Product Control Division

Guardian Fiberglass, Inc.

ACCEPTANCE NO.: 00-0801.06

APPROVED: NOV 0 9 2000

EXPIRES: NOV 0 9 2003

NOTICE OF ACCEPTANCE STANDARD CONDITIONS

1. Renewal of this Acceptance (approval) shall be considered after a renewal application has been filed and the original submitted documentation, including test supporting data, engineering documents, are no older than eight (8) years.

2. Any and all approved products shall be permanently labeled with the manufacturer's name, city, state, and the following statement: "Miami-Dade County Product Control Approved", or as specifically stated in the specific conditions of this Acceptance.

3. Renewals of Acceptance will not be considered if:
a) There has been a change in the South Florida Building Code affecting the evaluation of this product and the product is not in compliance with the code changes;
b) The product is no longer the same product (identical) as the one originally approved;
c) If the Acceptance holder has not complied with all the requirements of this acceptance, including the correct installation of the product;
d) The engineer who originally prepared, signed and sealed the required documentation initially submitted is no longer practicing the engineering profession.

4. Any revision or change in the materials, use, and/or manufacture of the product or process shall automatically be cause for termination of this Acceptance, unless prior written approval has been requested (through the filing of a revision application with appropriate fee) and granted by this office.

5. Any of the following shall also be grounds for removal of this Acceptance:
a) Unsatisfactory performance of this product or process.
b) Misuse of this Acceptance as an endorsement of any product, for sales, advertising or any other purpose.

6. The Notice of Acceptance number preceded by the words Miami-Dade County, Florida, and followed by the expiration date may be displayed in advertising literature. If any portion of the Notice of Acceptance is displayed, then it shall be done in its entirety.
7. A copy of this Acceptance as well as approved drawings and other documents, where it applies, shall be provided to the user by the manufacturer or its distributors and shall be available for inspection at the job site at all time. The engineer need not reseal the copies.

8. Failure to comply with any section of this Acceptance shall be cause for termination and removal of Acceptance.

9. This Notice of Acceptance consists of pages 1, 2 and this last page 3.

Candido Font, PE, Sr. Product Control Examiner
Product Control Division

END OF THIS ACCEPTANCE

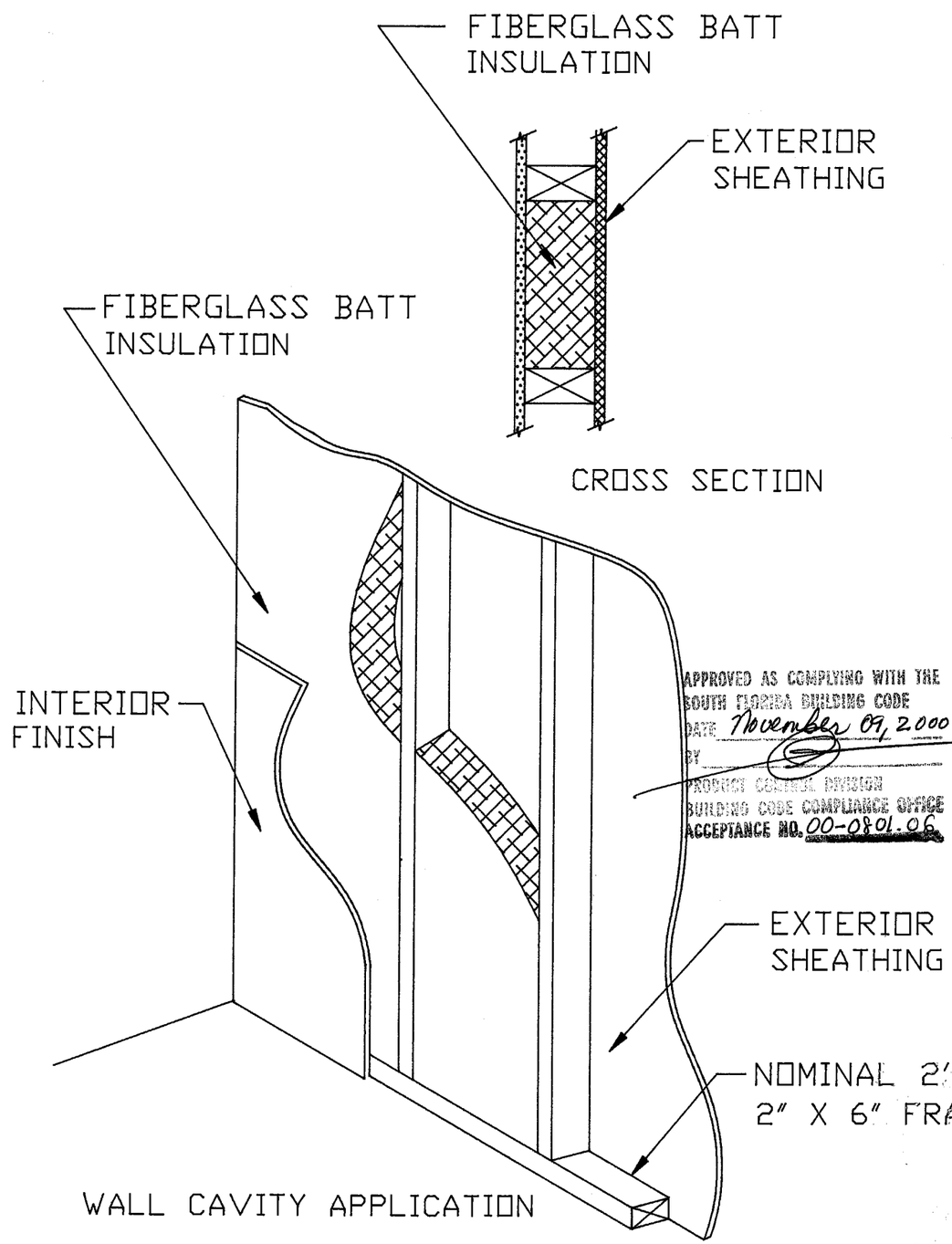

WALL CAVITY APPLICATION

APPROVED AS COMPLYING WITH THE SOUTH FLORIDA BUILDING CODE
DATE November 09, 2000
BY
PRODUCT CONTROL DIVISION
BUILDING CODE COMPLIANCE OFFICE
ACCEPTANCE NO. 00-0801.06

David W Yarbrough 10/3/00

NOTES:

FIBERGLASS INSULATION IS COMPRISED OF GLASS FIBERS AND BINDER TO FORM BATTS AND BLANKETS. THE FINISHED PRODUCTS COMPLY WITH ASTM C665-98 WITH THE FOLLOWING PROPERTIES:

PROPERTIES	ASTM STANDARD	RESULTS
FLAME SPREAD INDEX	E84	
UNFACED BATT		5
FSK FACED BATT		20
SMOKE DEVELOPED INDEX	E84	
UNFACED BATT		0
FSK FACED BATT		10
CRITICAL RADIANT FLUX	E970	
UNFACED BATT		0.91 w/cm2
FSK FACED BATT		1.08 w/cm2
WATER VAPOR PERMANENCE	E96	
FSK FACING		0.06 PERMS
FOIL FACING		0.15 PERMS
KRAFT FACING		1.8 PERMS
WATER VAPOR SORPTION	C1104	2.65 % AVG.
ODOR EMISSION	C1304	PASS
CORROSIVINESS	C665, Sect. 13.8	NO PITS OR PERFORATIONS
FUNGI RESISTANCE	C1338	PASS
THERMAL RESISTANCE	C518	SEE TABLE BELOW
DENSITY, THICKNESS	C167	SEE TABLE BELOW

THERMAL RESISTANCE OF 5 5/8" THICK UNFACED FIBERGLASS BATTS

MANUFACTURING LOCATION	TEST AVE. THICKNESS	TEST AVE. DENSITY	TEST AVE. RESISTANCE	TOTAL RESISTANCE
INWOOD	5.6248	0.5546	3.269	18.39
M. WELLS	5.6247	0.5827	3.207	18.04
ALBION	5.6246	0.6093	3.538	19.84

ENGINEER: D. W. YARBROUGH	GUARDIAN FIBERGLASS, INC. 1000 EAST NORTH STREET ALBION, MI 49224
ENGINEERING DISCIPLINE: HEAT TRANSFER	
REGISTRATION NUMBER: FL 50959	TITLE: WALL CAVITY APPLICATION
DRAWN: D BOLCE' 9-21-00	SIZE: B; FSCM NO: ; DWG NO: B-051000-001; REV: 0
ISSUED:	SCALE: NONE; SHEET 1 OF 3

DWG NO	SH	REV

REVISIONS			
REV	DESCRIPTION	DATE	APPROVED

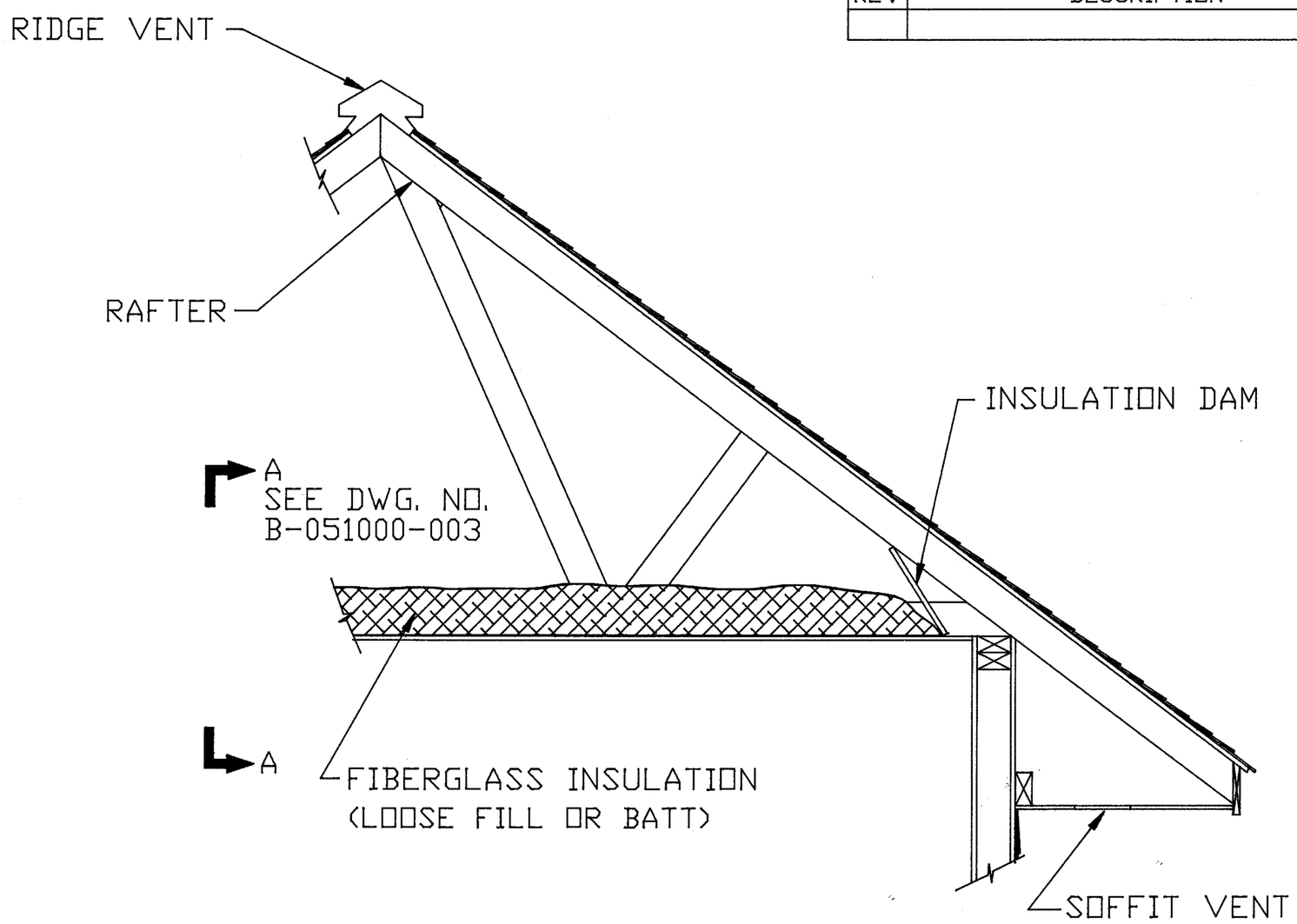

APPROVED AS COMPLYING WITH THE
SOUTH FLORIDA BUILDING CODE
DATE November 09, 2000
BY
PRODUCT CONTROL DIVISION
BUILDING CODE COMPLIANCE OFFICE
ACCEPTANCE NO. 00-0801.06

ATTIC APPLICATION

David W Yarbrough
10/3/00

ENGINEER D. W. YARBROUGH	GUARDIAN FIBERGLASS, INC. 1000 EAST NORTH STREET ALBION, MI 49224
ENGINEERING DISCIPLINE HEAT TRANSFER	
REGISTRATION NUMBER FL 50959	TITLE ATTIC AND WALL APPLICATION
DRAWN D BOLCE' 9-21-00	SIZE B / FSCM NO / DWG NO B-051000-002 / REV 0
ISSUED	SCALE NONE / SHEET 2 OF 3

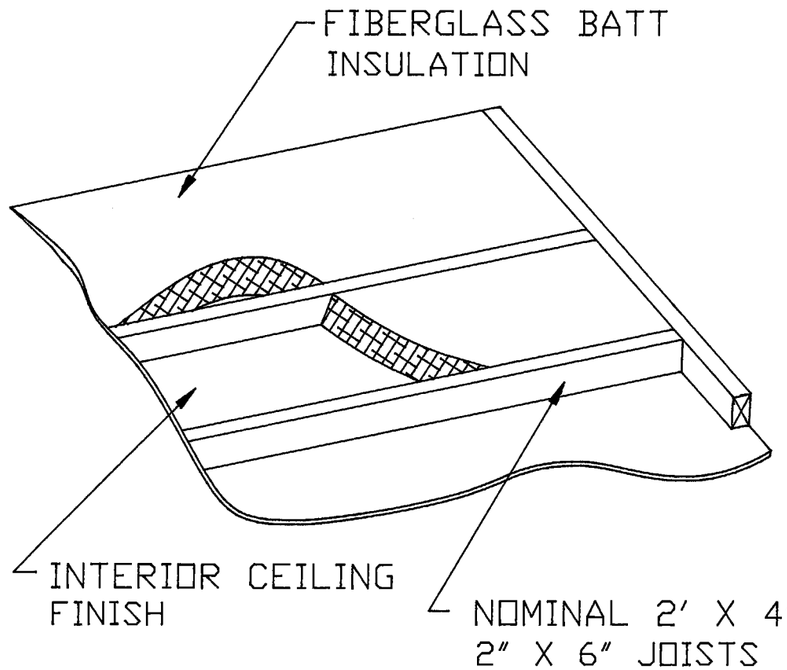

ATTIC APPLICATION

APPROVED AS COMPLYING WITH THE
SOUTH FLORIDA BUILDING CODE
DATE November 09, 2000
BY
PRODUCT CONTROL DIVISION
BUILDING CODE COMPLIANCE OFFICE
ACCEPTANCE NO. 00-0801.06

NOTES:

LOOSE-FILL FIBERGLASS INSULATION FOR ATTICS AND WALLS IS COMPRISED OF GLASS FIBERS. ONE PRODUCT CONTAINS AN ADHESIVE AND IS APPLIED WITH ADDED MOISTURE. THE FINISHED PRODUCTS COMPLY WITH ASTM C764-98 WITH THE FOLLOWING PROPERTIES:

PROPERTIES	ASTM STANDARD	RESULTS
FLAME SPREAD INDEX	E84	0
SMOKE DEVELOPED INDEX	E84	0
DENSITY	C519	0.60 lb/ft^3
THERMAL RESISTANCE	C518	
PRO WHITE III		SEE TABLE BELOW
ULTRAFIT DS		SEE TABLE BELOW
LOSS ON IGNITION	C764, Sect. 12.3	
PRO WHITE III		0.0 % LOSS
ULTRAFIT DS		3.7 % LOSS
CRITICAL RADIANT FLUX	E970	
PROWHITE III		1.08 w/cm2
ULTRAFIT DS		1.08 w/cm^2
COMBUSTION CHARACTERISTICS	E136	PASS
WATER VAPOR SORPTION	C1104	
PRO WHITE III		1.7%
ULTRAFIT DS		3.7%
ODOR EMISSION	C1304	
PRO WHITE III		PASS
ULTRA FIT DS		PASS
FUNGI RESISTANCE	C1338	PASS
CORROSIVINESS	C764, Sect. 12.8	NO PITS OR PERFORATIONS

THERMAL RESISTANCE OF 6" THICK
LOOSE-FILL FIBERGLASS INSULATION

TYPE	TEST AVE. THICKNESS	TEST AVE. DENSITY	TEST AVE. RESISTANCE	TOTAL RESISTANCE
ULTRAFIT DS	6.00	2.616	4.369	26.21
PRO WHITE III	6.00	0.660	2.770	16.62

Daniel W Yarbrough
10/3/00

ENGINEER: D. W. YARBROUGH	GUARDIAN FIBERGLASS, INC. 1000 EAST NORTH STREET ALBION, MI 49224
ENGINEERING DISCIPLINE: HEAT TRANSFER	
REGISTRATION NUMBER: FL 50959	TITLE: ATTIC AND WALL APPLICATION
DRAWN: D BOLCE' 9-21-00	SIZE: B; FSCM NO: ; DWG NO: B-051000-003; REV: 0
ISSUED:	SCALE: NONE; SHEET 3 OF 3