MIAMI-DADE

MIAMI-DADE COUNTY, FLORIDA
METRO-DADE FLAGLER BUILDING

BUILDING CODE COMPLIANCE OFFICE
METRO-DADE FLAGLER BUILDING
140 WEST FLAGLER STREET, SUITE 1603
MIAMI, FLORIDA 33130-1563
(305) 375-2901 FAX (305) 375-2908

CONTRACTOR LICENSING SECTION
(305) 375-2527 FAX (305) 375-2558

CONTRACTOR ENFORCEMENT DIVISION
(305) 375-2966 FAX (305) 375-2908

PRODUCT CONTROL DIVISION
(305) 375-2902 FAX (305) 372-6339

PRODUCT CONTROL NOTICE OF ACCEPTANCE

Alusuisse Composites Inc.
P.O. Box 507 (208 West 5th Street)
Benton ,KY 42025

Your application for Notice of Acceptance (NOA) of:
Aluminum Composite Panel
under Chapter 8 of the Code of Miami-Dade County governing the use of Alternate Materials and Types of Construction, and completely described herein, has been recommended for acceptance by the Miami-Dade County Building Code Compliance Office (BCCO) under the conditions specified herein.

This NOA shall not be valid after the expiration date stated below. BCCO reserves the right to secure this product or material at any time from a jobsite or manufacturer's plant for quality control testing. If this product or material fails to perform in the approved manner, BCCO may revoke, modify, or suspend the use of such product or material immediately. BCCO reserves the right to revoke this approval, if it is determined by BCCO that this product or material fails to meet the requirements of the South Florida Building Code.

The expense of such testing will be incurred by the manufacturer.

ACCEPTANCE NO.: 00-0802.05
EXPIRES: 07/31/2005

Raul Rodriguez
Chief Product Control Division

THIS IS THE COVERSHEET, SEE ADDITIONAL PAGES FOR SPECIFIC AND GENERAL CONDITIONS
BUILDING CODE & PRODUCT REVIEW COMMITTEE

This application for Product Approval has been reviewed by the BCCO and approved by the Building Code and Product Review Committee to be used in Miami-Dade County, Florida under the conditions set forth above.

Francisco J. Quintana, R.A.
Director
Miami-Dade County
Building Code Compliance Office

APPROVED: 12/14/2000

Alusuisse Composites, Inc.

ACCEPTANCE NO: 00-0802.05

APPROVED: DEC 1 4 2000

EXPIRES: 07/31/2005

NOTICE OF ACCEPTANCE: SPECIFIC CONDITIONS

1. SCOPE

1.1 This renews the Notice of Acceptance No 97-0410.01, which was issued on 07/31/97. It approves an aluminum wall panel as described in Section 2 of this Notice of Acceptance, designed to comply with the South Florida Building Code, (SFBC) 1994 Edition for Miami-Dade County. For the locations where the pressure requirements, as determined by SFBC Chapter 23 do not exceed the Design Pressure Rating values indicated on the approve drawings.

2. PRODUCT DESCRIPTION

2.1 The **Alucobond Wall Panel** and its components shall be constructed in strict compliance with the following documents: Drawing No ALU-1, titled "Dade County – Alucobond", prepared by Alusuisse Composites, Inc., dated 10/25/00, with no revisions, sheets 1 of 1. It bears the Miami-Dade County Product Control Approval Stamp with the Notice of Acceptance number and approval date by the Miami-Dade County Product Control Division. These documents shall hereinafter be referred to as the approved drawings.

3. LIMITATIONS

3.1 The maximum design pressure rating is + 61.8 psf. & -81.3 psf.

4. INSTALLATION

4.1 The Alucobond Wall Panel shall be installed in strict compliance with the approved drawings.

4.2 The installation of this product **will not require** a Hurricane Protection System.

5. LABELING

5.1 Each panel shall bear a permanent label with the manufacturer's name or logo, city, state and the following statement: "Miami-Dade County Product Control Approved".

6. BUILDING PERMIT REQUIREMENTS

6.1 Application for Building Permit shall be accompanied by copies of the following:

6.1.1 This Notice of Acceptance with duplicate copies of the approved drawings as identified in Section 2 of this NOA, showing the components selected for the proposed installation.

6.1.2 Any other documents required by the Building Official or the SFBC in order to properly evaluate the installation of this system.

Candido Font, PE, Sr., Product Control Examiner
Product Control Division

Alusuisse Composites, Inc.

ACCEPTANCE NO.: 00-0802.05

APPROVED: DEC 1 4 2000

EXPIRES: 07/31/2005

NOTICE OF ACCEPTANCE STANDARD CONDITIONS

1. Renewal of this Acceptance (approval) shall be considered after a renewal application has been filed and the original submitted documentation, including test supporting data, engineering documents, are no older than eight (8) years.

2. Any and all approved products shall be permanently labeled with the manufacturer's name, city, state, and the following statement: "Miami-Dade County Product Control Approved", or as specifically stated in the specific conditions of this Acceptance.

3. Renewals of Acceptance will not be considered if:
   a) There has been a change in the South Florida Building Code affecting the evaluation of this product and the product is not in compliance with the code changes;
   b) The product is no longer the same product (identical) as the one originally approved;
   c) If the Acceptance holder has not complied with all the requirements of this acceptance, including the correct installation of the product;
   d) The engineer who originally prepared, signed and sealed the required documentation initially submitted is no longer practicing the engineering profession.

4. Any revision or change in the materials, use, and/or manufacture of the product or process shall automatically be cause for termination of this Acceptance, unless prior written approval has been requested (through the filing of a revision application with appropriate fee) and granted by this office.

5. Any of the following shall also be grounds for removal of this Acceptance:
   a) Unsatisfactory performance of this product or process.
   b) Misuse of this Acceptance as an endorsement of any product, for sales, advertising or any other purpose.

6. The Notice of Acceptance number preceded by the words Miami-Dade County, Florida, and followed by the expiration date may be displayed in advertising literature. If any portion of the Notice of Acceptance is displayed, then it shall be done in its entirety.
7. A copy of this Acceptance as well as approved drawings and other documents, where it applies, shall be provided to the user by the manufacturer or its distributors and shall be available for inspection at the job site at all time. The engineer need not reseal the copies.

8. Failure to comply with any section of this Acceptance shall be cause for termination and removal of Acceptance.

9. This Notice of Acceptance consists of pages 1, 2 and this last page 3.

Candido Font, PE, Sr., Product Control Examiner
Product Control Division

END OF THIS ACCEPTANCE

PANEL DETAILS:

DESCRIPTION:

THIS IS 4mm THICK ALUCOBOND, A NON-FIRE RATED COMPOSITE PANEL CONSISTING OF TWO .020" ALUMINUM FACE SHEETS WITH A LOW DENSITY POLYETHYLENE CORE. THE PANEL EDGES ARE FOLDED OVER AND THE FOLDED CORNERS ARE REINFORCED WITH .035" THICK ALUMINUM CORNER ANGLES WHICH ARE ATTACHED WITH #10x3/4" SHEET METAL SCREWS.

MATERIAL CHARACTERISTICS:

1. POLYETHYLENE CORE

DESCRIPTION	TEST	PROPERTIES
SELF-IGNITION TEMP.	ASTM D1929	747°F
FLASH IGNITION TEMP.	ASTM D1929	678°F
RATE OF BURNING	ASTM D635	C1
FLAME SPREAD INDEX	ASTM E84	0
SMOKE DEVELOPMENT	ASTM E84	5

2. ALUMINUM SKINS

THICKNESS	0.02 INCHES
ALLOY	3003-H24
FINISH	PVDF PAINT

3. PANEL SIZES

WIDTH	39",48",50",60" & 62"
LENGTH	8',10',12' & 16'
THICKNESS	0.16 INCHES (4.00 mm)

DESIGN PRESSURE RATING
+61.8 PSF - 81.3 PSF
LARGE MISSLE IMPACT RESISTANCE INSTALLED IN FRONT OF 5/8" PLYWOOD SUPPORTED 16"O.C.

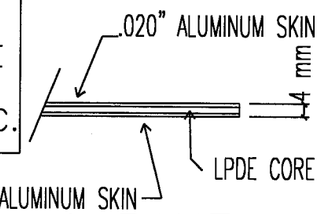

.1 PANEL SECTION

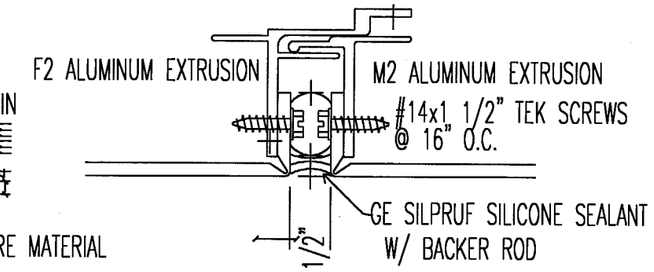

.2 PANEL JOINTS

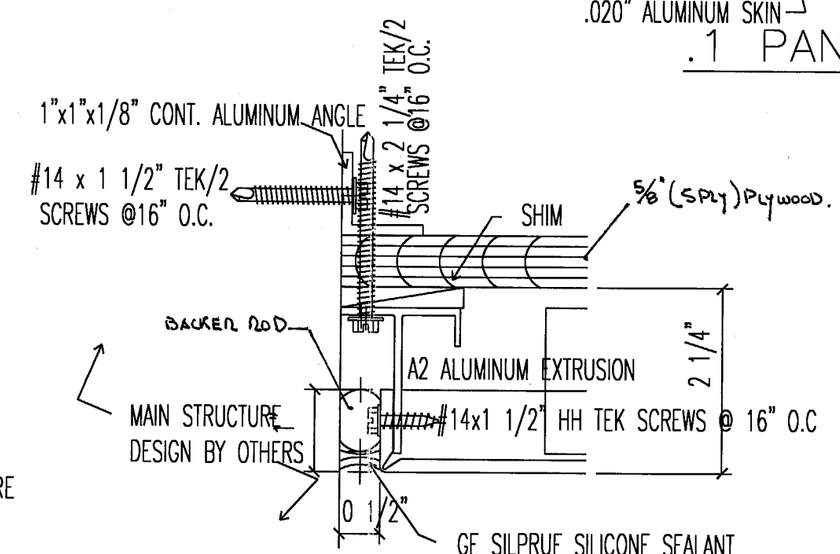

.3 PANEL PERIMETER

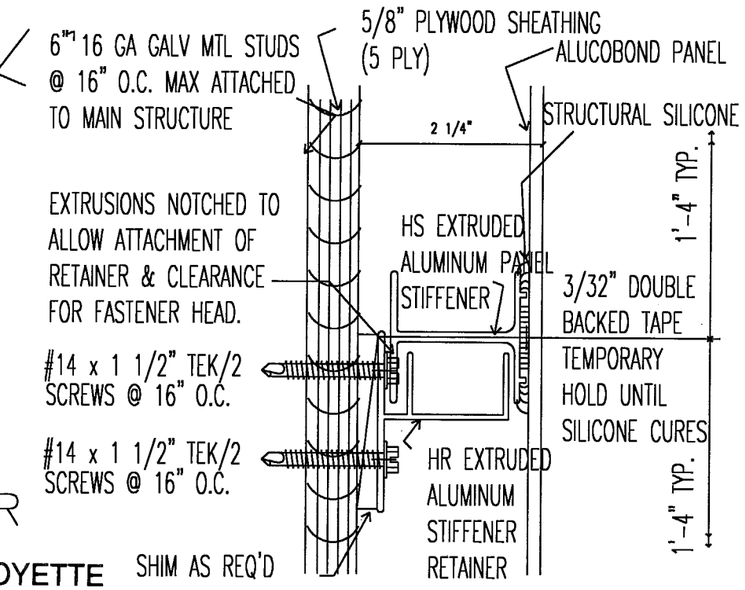

.4 PANEL STIFFENER RETAINER

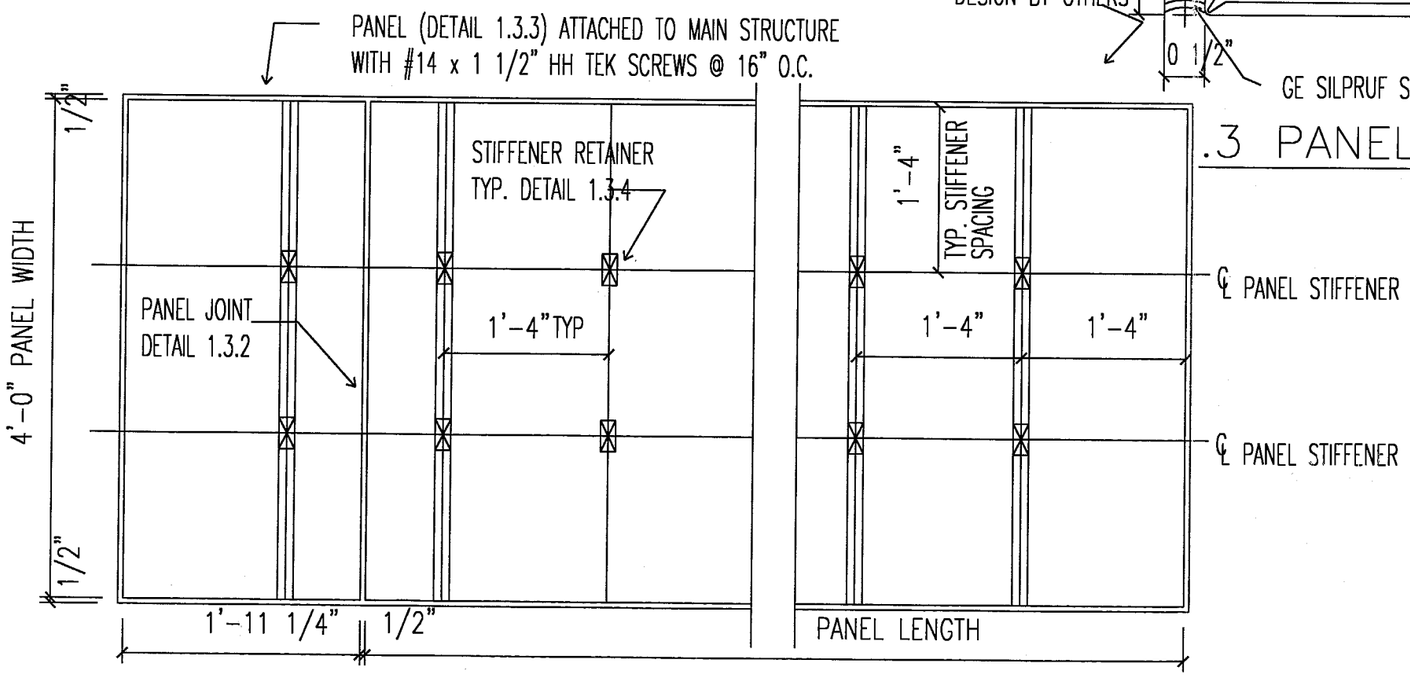

RICHARD BOYETTE
FL PE # 42485
4031 COCONUT BLVD
ROYAL PALM BCH FL 33411
561-790-5766

11/17/00
00-1104

FOR OFFICE USE ONLY

APPROVED AS COMPLYING WITH THE SOUTH FLORIDA BUILDING CODE
DATE December 14, 2000
BY
PRODUCT CONTROL DIVISION
BUILDING CODE COMPLIANCE OFFICE
ACCEPTANCE NO. 00-0802.05

ALUSUISSE COMPOSITES, INC.			
208 WEST 5th STREET			
BENTON, KY 42025			
TITLE: DADE COUNTY - ALUCOBOND			
DWG NO.	SHT. NO.	DWG DATE	REV.DATE
ALU-1	1	10/25/00	
RICHARD BOYETTE, PE		PE #42485	