MIAMI-DADE

MIAMI-DADE COUNTY, FLORIDA
METRO-DADE FLAGLER BUILDING

BUILDING CODE COMPLIANCE OFFICE
METRO-DADE FLAGLER BUILDING
140 WEST FLAGLER STREET, SUITE 1603
MIAMI, FLORIDA 33130-1563
(305) 375-2901 FAX (305) 375-2908

CONTRACTOR LICENSING SECTION
(305) 375-2527 FAX (305) 375-2558

CONTRACTOR ENFORCEMENT DIVISION
(305) 375-2966 FAX (305) 375-2908

PRODUCT CONTROL DIVISION
(305) 375-2902 FAX (305) 372-6339

PRODUCT CONTROL NOTICE OF ACCEPTANCE

Norandex Building Products
4504 30th Street West
Bradenton ,FL 34207

Your application for Notice of Acceptance (NOA) of:
Series 435 Aluminum Fixed Windows
under Chapter 8 of the Code of Miami-Dade County governing the use of Alternate Materials and Types of Construction, and completely described herein, has been recommended for acceptance by the Miami-Dade County Building Code Compliance Office (BCCO) under the conditions specified herein.

This NOA shall not be valid after the expiration date stated below. BCCO reserves the right to secure this product or material at any time from a jobsite or manufacturer's plant for quality control testing. If this product or material fails to perform in the approved manner, BCCO may revoke, modify, or suspend the use of such product or material immediately. BCCO reserves the right to revoke this approval, if it is determined by BCCO that this product or material fails to meet the requirements of the South Florida Building Code.

The expense of such testing will be incurred by the manufacturer.

ACCEPTANCE NO.: 00-0808.05
EXPIRES: 03/22/2004

Raul Rodriguez
Chief Product Control Division

THIS IS THE COVERSHEET, SEE ADDITIONAL PAGES FOR SPECIFIC AND GENERAL CONDITIONS
BUILDING CODE & PRODUCT REVIEW COMMITTEE

This application for Product Approval has been reviewed by the BCCO and approved by the Building Code and Product Review Committee to be used in Miami-Dade County, Florida under the conditions set forth above.

Francisco J. Quintana, R.A.
Director
Miami-Dade County
Building Code Compliance Office

APPROVED: 03/22/2001

Norandex Building Products

ACCEPTANCE No.: 00-0808.05

APPROVED : March 22, 2001

EXPIRES : March 22, 2004

NOTICE OF ACCEPTANCE: SPECIFIC CONDITIONS

1. SCOPE

1.1 This approves an aluminum fixed window as described in Section 2 of this Notice of Acceptance, designed to comply with the South Florida Building Code, (SFBC), 1994 Edition for Miami-Dade County, for the locations where the pressure requirements, as determined by SFBC Chapter 23, do not exceed the Design Pressure Rating values indicated in the approved drawings.

2. PRODUCT DESCRIPTION

2.1 The **Series 435, Aluminum Fixed Picture Windows** and its components shall be constructed in strict compliance with the following document: Drawing No. **01-0208,** titled "Series 435 Aluminum Designer Window", sheets 1 thru 4 of 4, dated 02/20/01 and last revised on 02-28-01, prepared by Applied Engineering Concept, Inc. , signed and sealed by Sergio J. Alcorta, P.E. , bearing the Miami-Dade County Product Control approval stamp with the Notice of Acceptance number and approval date by the Miami-Dade County Product Control Division. These documents shall hereinafter be referred to as the approved drawings.

3. LIMITATIONS

3.1 This approval applies to single unit applications of aluminum fixed window, as shown in approved drawings.

4. INSTALLATION

4.1 The aluminum fixed window and its components shall be installed in strict compliance with the approved drawings.

4.2 Hurricane protection system (shutters): the installation of this unit **will require** a hurricane protection system.

5. LABELING

5.1 Each unit shall bear a permanent label with the manufacturer's name or logo, city, state and following statement: "Miami-Dade County Product Control Approved".

6. BUILDING PERMIT REQUIREMENTS

6.1 Application for building permit shall be accompanied by two copies of the following:

- **6.1.1** This Notice of Acceptance.
- **6.1.2** Duplicate copies of the approved drawings, as identified in section 2 of this Notice of Acceptance, clearly marked to show the components selected for the proposed installation.
- **6.1.3** Any other documents required by the Building Official or the South Florida Building Code (SFBC) in order to properly evaluate the installation of this system.

Ishaq I. Chanda

Ishaq I. Chanda, P.E. Product Control Examiner
Product Control Division

Norandex Building Products

ACCEPTANCE No.: 00-0808.05

APPROVED : March 22, 2001

EXPIRES : March 22, 2004

NOTICE OF ACCEPTANCE: EVIDENCE SUBMITTED

1. Renewal of this Acceptance (approval) shall be considered after a renewal application has been filed and the original submitted documentation, including test supporting data, engineering documents, are no older than eight (8) years.

2. Any and all approved products shall be permanently labeled with the manufacturer's name, city, state, and the following statement: "Miami-Dade County Product Control Approved", or as specifically stated in the specific conditions of this Acceptance.

3. Renewals of Acceptance will not be considered if:
   a) There has been a change in the South Florida Building Code affecting the evaluation of this product and the product is not in compliance with the code changes;
   b) The product is no longer the same product (identical) as the one originally approved.
   c) If the Acceptance holder has not complied with all the requirements of this acceptance, including the correct installation of the product;
   d) The engineer who originally prepared, signed and sealed the required documentation initially submitted, is no longer practicing the engineering profession.

4. Any revision or change in the materials, use, and/or manufacture of the product or process shall automatically be cause for termination of this Acceptance, unless prior written approval has been requested (through the filing of a revision application with appropriate fee) and granted by this office.

5. Any of the following shall also be grounds for removal of this Acceptance:
   a) Unsatisfactory performance of this product or process;
   b) Misuse of this Acceptance as an endorsement of any product, for sales, advertising or any other purpose.

6. The Notice of Acceptance number preceded by the words Dade County, Florida, and followed by the expiration date may be displayed in advertising literature. If any portion of the Notice of Acceptance is displayed, then it shall be done in its entirety.

7. A copy of this Acceptance as well as approved drawings and other documents, where it applies, shall be provided to the user by the manufacturer or its distributors and shall be available for inspection at the job site at all times. The engineer does not need to reseal the copies.

8. Failure to comply with any section of this Acceptance shall be cause for termination and removal of Acceptance.

8. This Acceptance contains pages 1, 2, this last page 3.

Ishaq I. Chanda

Ishaq I. Chanda, P.E. Product Control Examiner
Product Control Division

END OF THIS ACCEPTANCE

Norandex Building Products

ACCEPTANCE No.: 00-0808.05

APPROVED : March 22, 2001

EXPIRES : March 22, 2004

NOTICE OF ACCEPTANCE: EVIDENCE SUBMITTED

A. Drawing:

1. Manufacturer's parts drawings and sections.
2. Drawing No. **01-0208,** titled "Series 435 Aluminum Designer Window", sheets 1 through 4 of 4, dated 02/20/01 and last revised on 02-28-01, prepared by Applied Engineering Concept, Inc. , signed and sealed by Sergio J. Alcorta, P.E.

B. Test:

Test reports on 1) Air Infiltration Test, per PA 202-94
2) Uniform Static Air Pressure Test, Loading per PA 202-94
3) Water Resistance Test, per PA 202-94

along with marked-up drawings and installation diagram of aluminum fixed windows, prepared by Fenestration Testing Laboratory, Inc., Test Report No(s). **FTL –2668 (00074)** Rectangular, **FTL – 2674 (00051)** Circular Top, **FTL –2658 (00048)** Eyebrow, **FTL –2657 (00049)**, Rectangular **FTL –2663 (00050)** Square and **FTL –2665 (00052)** Octagon dated May 26 thru July 13, 2000, signed and sealed by Aldo P. Gonzales, P.E.

C. CALCULATIONS

1. Window performance analysis & anchor verification calculations for aluminum fixed Picture window, dated 02-05-01, prepared by Applied Engineering Concept Inc, signed and sealed by Sergio J. Alcorta, P.E.
2. Window performance analysis & anchor verification calculations for aluminum fixed Picture window, dated 01-17-01, prepared, signed and sealed by Charls A. Pagen, P.E.

D. STATEMENTS:

1. Statement letter of conformance, dated February 20, 2001, signed and sealed by Sergio J. Alcorta, P.E.
2. Statement letter of no financial interest, dated February 20, 2001, signed and sealed by Sergio J. Alcorta, P.E.
3. Statement letter of conformance, dated October17, 2000, signed and sealed by Charles A. Pagen, P.E.
4. Statement letter of no financial interest, dated October17, 2000, signed & sealed by Charles A. Pagen, P.E.
5. Laboratory compliance letter, issued by Fenestration Testing Laboratory., dated May 26 thru July13, 2000, signed and sealed by Aldo P. Gonzales, P.E.

E. MATERIAL CERTIFICATIONS

1. None

Ishaq I. Chanda

Ishaq I. Chanda, P.E. Product Control Examiner
Product Control Division

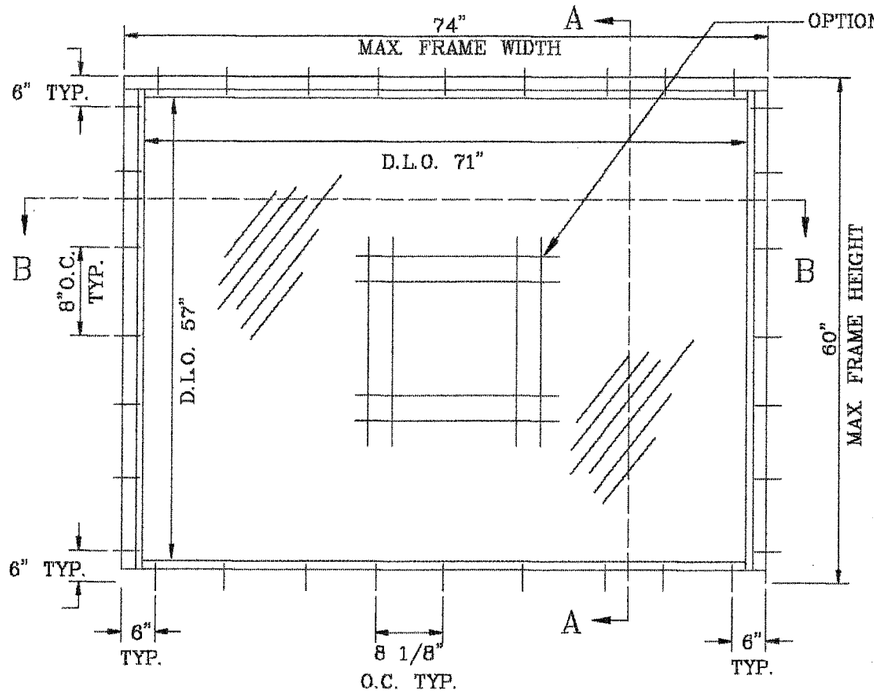

TYPICAL ELEVATION

DESIGN PRESSURE RATING WITH 3/16" TEMPERED GLASS	
POSITIVE	+ 70 PSF
NEGATIVE	− 70 PSF

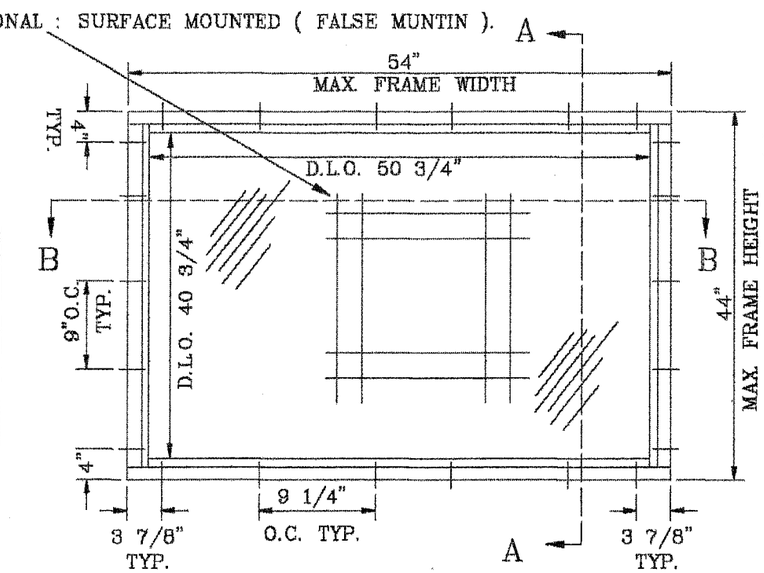

TYPICAL ELEVATION

DESIGN PRESSURE RATING WITH 3/16" ANNEALED GLASS	
POSITIVE	+ 50 PSF
NEGATIVE	− 50 PSF

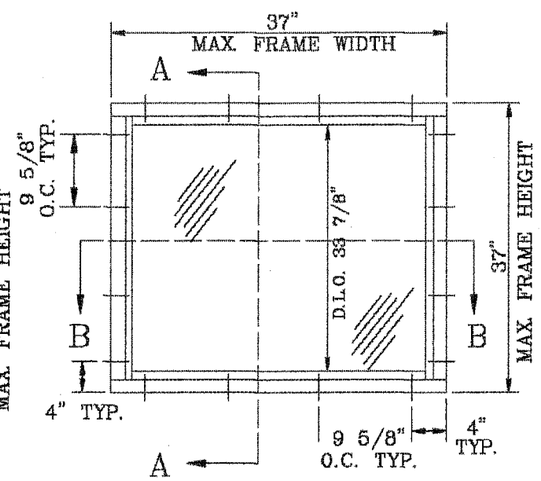

TYPICAL ELEVATION

DESIGN PRESSURE RATING WITH DSB ANNEALED GLASS	
POSITIVE	+ 50
NEGATIVE	− 50

DESIGN PRESSURE RATING WITH 3/16" TEMPERED GLASS	
POSITIVE	+ 61 PSF
NEGATIVE	− 61 PSF

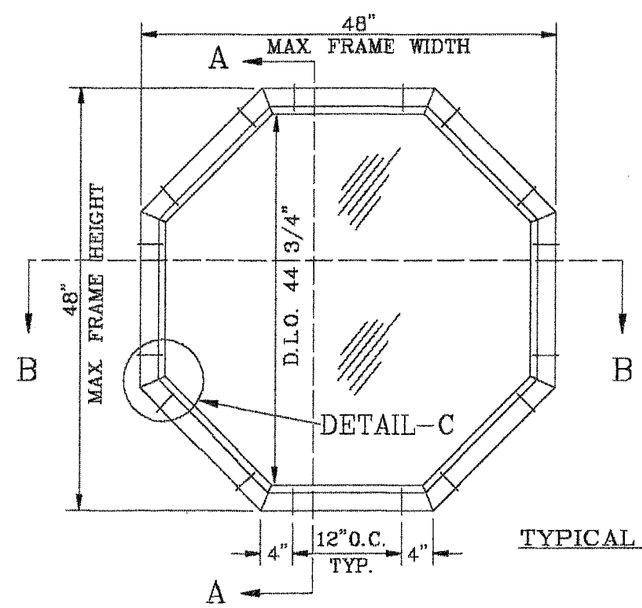

TYPICAL ELEVATION

APPROVED AS COMPLYING WITH THE SOUTH FLORIDA BUILDING CODE
DATE 03-22-2001
BY Ishaq I. Chanda
PRODUCT CONTROL DIVISION
BUILDING CODE COMPLIANCE OFFICE
ACCEPTANCE NO. 00-0808.05

NOTE:

1. MIAMI−DADE COUNTY APPROVED SHUTTERS REQUIRED FOR INSTALLATION OF THESE UNITS.
2. FRAME CORNERS & INSTALLATION SCREWS TO BE SEALED WITH SILICONE SEALANT.

DLO = DAYLIGHT OPENINGS

NON−IMPACT RESISTANT

SERGIO J. ALCORTA
STRUCTURAL ENGR.
FLA. PE # 14464

APPLIED ENGINEERING CONCEPTS, INC.
P.O. BOX 12-6403 HIALEAH, FL. 33012
TEL. (305) 820-0550
FAX. (305) 820-9620

SERIES: 435 ALUMINUM
DESIGNER WINDOW

NORANDEX
4505 30th STREET WEST
BRADENTON, FL. 34207
PHONE: (941) 755-1591

NO.	DATE	REVISIONS DESCRIPTION
1	2/28/01	M.D.C.C. CORRECTIONS

DATE: 2/20/01
SCALE: N.T.S.
DWG. BY: J.S.
CHK. BY:
JOB NO.: 01-0208
SHEET 1 OF 4
DWG. NO.: 01-0208

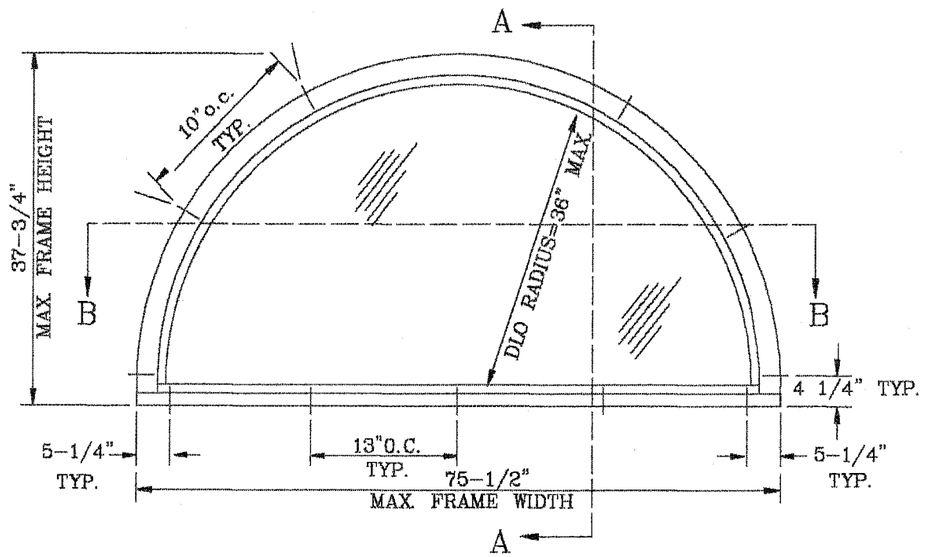

TYPICAL ELEVATION

DESIGN PRESSURE RATING WITH 3/16" TEMPERED GLASS	
POSITIVE	+ 50
NEGATIVE	− 50

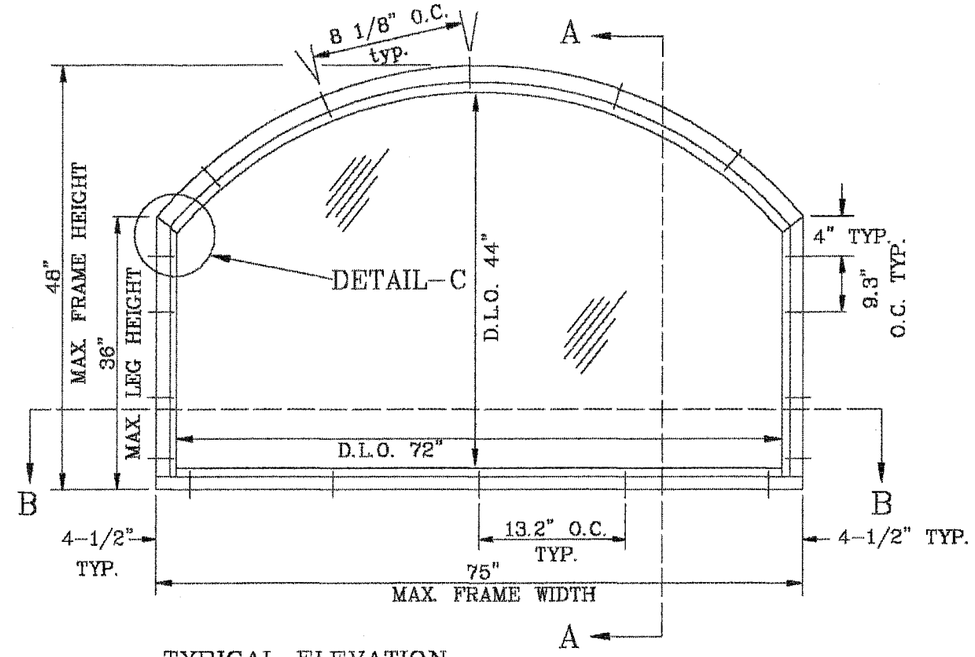

TYPICAL ELEVATION

DESIGN PRESSURE RATING WITH 3/16" ANNEALED GLASS	
POSITIVE	+ 70
NEGATIVE	− 70

APPROVED AS COMPLYING WITH THE
SOUTH FLORIDA BUILDING CODE
DATE 03-22-2001
BY Ishaq I. Chanda
PRODUCT CONTROL DIVISION
BUILDING CODE COMPLIANCE OFFICE
ACCEPTANCE NO. 00-0808.05

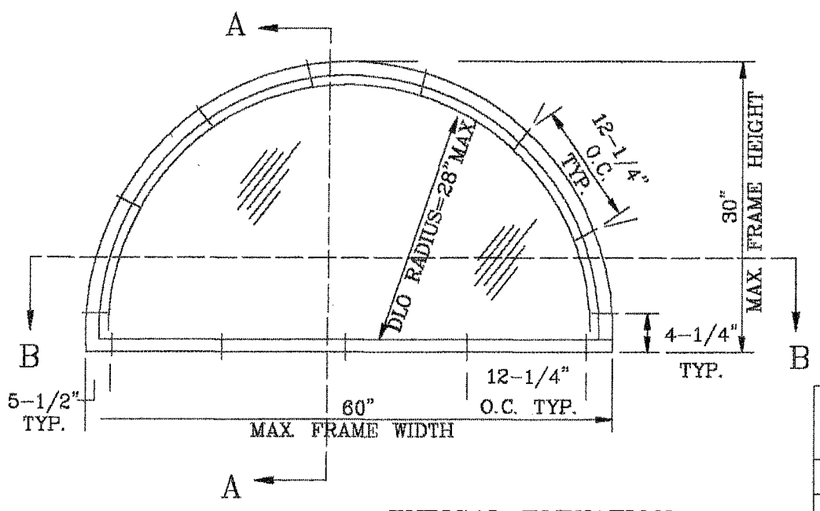

TYPICAL ELEVATION

NOTE:

1. MIAMI-DADE COUNTY APPROVED SHUTTERS REQUIRED FOR INSTALLATION OF THESE UNITS.
2. FRAME CORNERS & INSTALLATION SCREWS TO BE SEALED WITH SILICONE SEALANT.

DLO = DAYLIGHT OPENINGS

DESIGN PRESSURE RATING WITH 3/16" ANNEALED GLASS	
POSITIVE	+ 75
NEGATIVE	− 75

NON-IMPACT RESISTANT

SERGIO J. ALCORTA
STRUCTURAL ENGR.
FLA. PE # 14464

APPLIED ENGINEERING CONCEPTS, INC.
P.O. BOX 12-6403 HIALEAH, FL. 33012
TEL. (305) 820-0550
FAX. (305) 820-9620

SERIES: 435 ALUMINUM DESIGNER WINDOW

NORANDEX
4505 30th STREET WEST
BRADENTON, FL. 34207
PHONE: (941) 755-1591

NO.	DATE	REVISIONS DESCRIPTION
1	2/28/01	M.D.C.C. CORRECTIONS

DATE: 2/20/01
SCALE: N.T.S.
DWG. BY: J.S.
CHK. BY:
JOB NO.: 01-0208
SHEET 2 OF 4
DWG. NO.: 01-0208

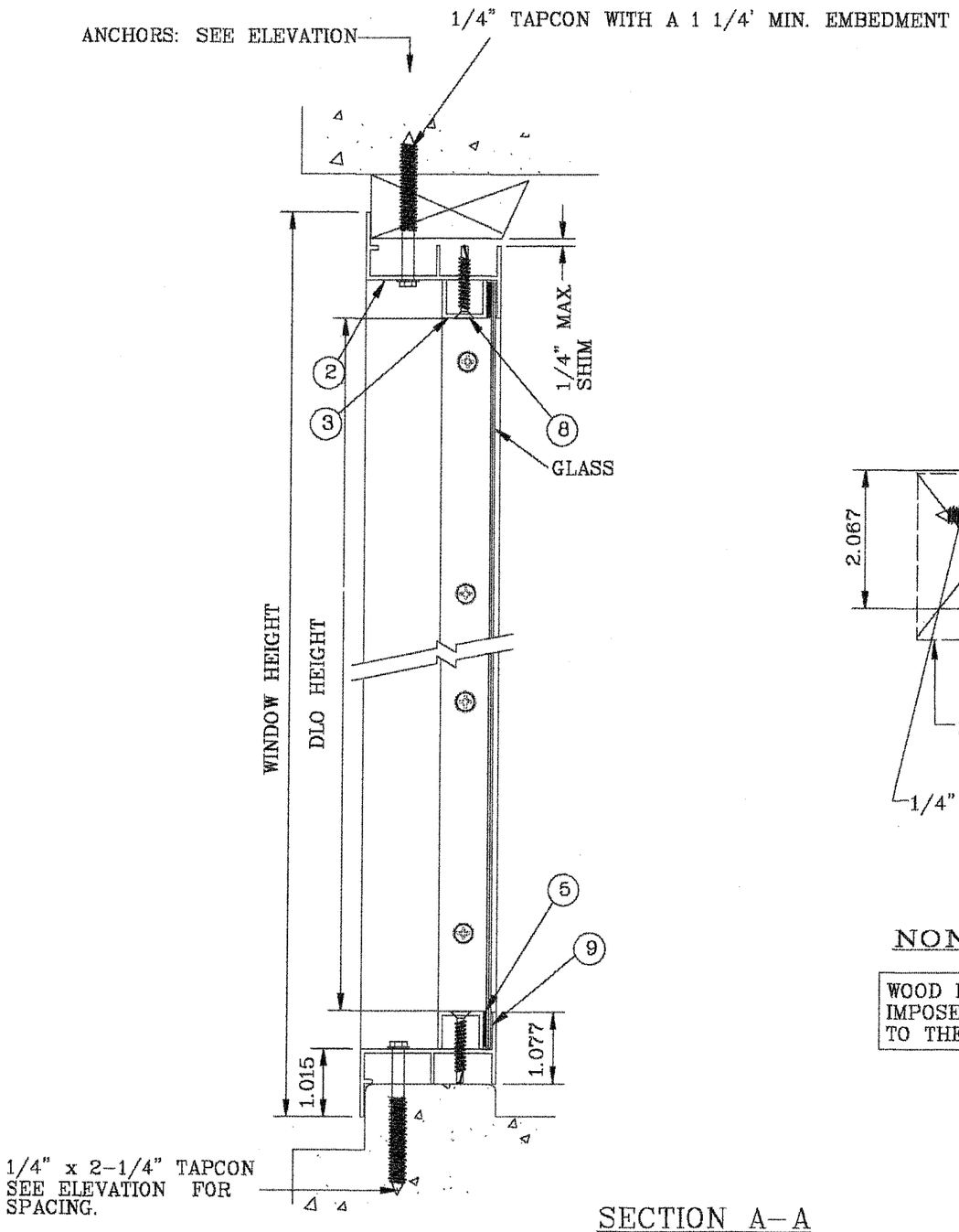

SECTION A–A

ANCHORS: 1/4" x 2 1/4" TAPCON

A. INTO 2BY WOOD BUCKS, 1–1/4" MIN. PENETRATION INTO WOOD
B. THROUGH 1BY WOOD BUCK OR INTO MASONRY, WITH 1–1/4" MIN. EMBEDMENT INTO MASONRY

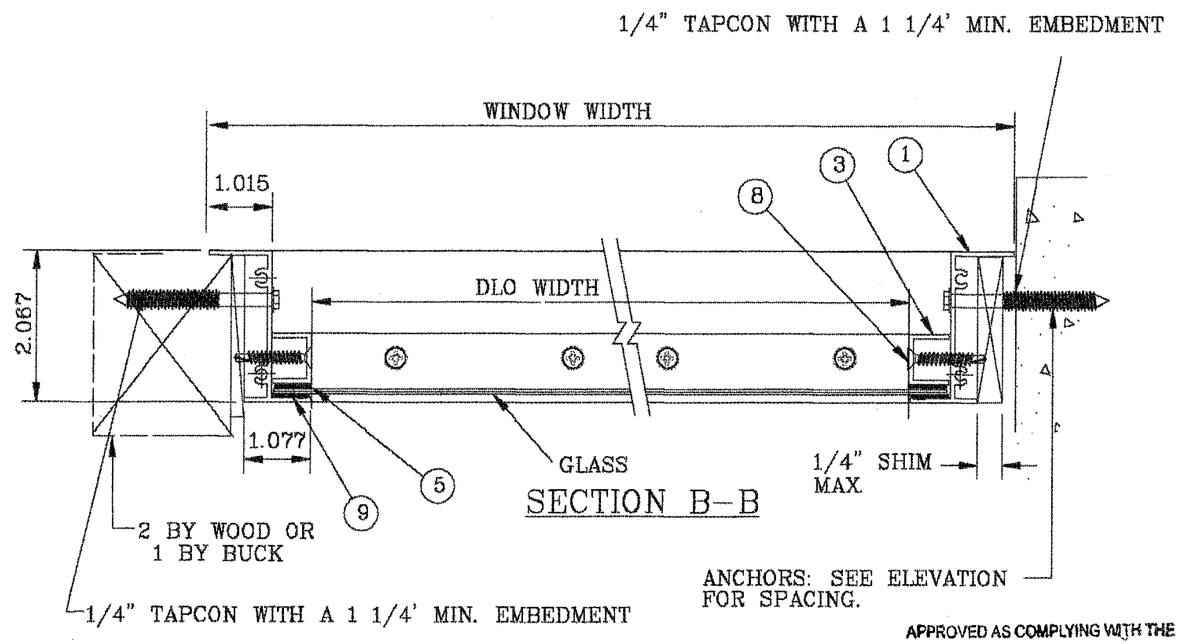

SECTION B–B

APPROVED AS COMPLYING WITH THE SOUTH FLORIDA BUILDING CODE
DATE 03-22-2001
BY Ishaq I. Chauda
PRODUCT CONTROL DIVISION
BUILDING CODE COMPLIANCE OFFICE
ACCEPTANCE NO. 00-0808.05

NON–IMPACT RESISTANT

WOOD BUCKS NOT BY NORANDEX, MUST SUSTAIN LOADS IMPOSED BY GLAZING SYSTEM AND TRANSFER THEM TO THE BUILDING STRUCTURE.

NON–IMPACT RESISTANT

Sergio Alcorta
SERGIO J. ALCORTA
STRUCTURAL ENGR.
FLA. PE # 14464

APPLIED ENGINEERING CONCEPTS, INC.
P.O. BOX 12-6403 HIALEAH, FL. 33012
TEL. (305) 820-0550
FAX. (305) 820-9620

SERIES: 435 ALUMINUM
DESIGNER WINDOW

NORANDEX
4505 30th STREET WEST
BRADENTON, FL. 34207
PHONE: (941) 755-1591

NO.	DATE	REVISIONS DESCRIPTION
1	2/28/01	M.D.C.C. CORRECTIONS

DATE: 2/20/01
SCALE: N.T.S.
DWG. BY: J.S.
CHK. BY:
JOB NO.: 01-0208
SHEET 3 OF 4
DWG. NO.: 01-0208

ITEM Nº	PART Nº	QTY.	DESCRIPTION	VENDOR
1	XDW-1A-X	2	435 JAMB FLANGE AL. 6063-T5	PROFILE EXTRUSIONS
2	XDW-2A-X	2	435HEAD/SILL FLANGE AL6063-T5	PROFILE EXTRUSIONS
3	XDW-6	4	GLAZING STOP AL 6063-T5	PROFILE EXTRUSIONS
4	PURCHASE	1	WINDOW GLASS (SEE ELEVATION)	AFG
5	V992	AS REQ'D	GLAZING TAPE	NORTON CORP.
6	V744	AS REQ'D	DW GLASS STOP TAPE	NORTON CORP.
7	F-8-24	8	#8 x 7/8" PH PAN HEAD	PURCHASE
8	F-8-16	AS REQ'D	#8 x 1" PH FLAT HEAD (TEK)	PURCHASE
9	PURCHASE	AS REQ'D	899 GLAZING SILICON	DOW CORNING
10	PURCHASE	AS REQ'D	1199 GLAZING SILICON	DOW CORNING
11	PURCHASE	AS REQ'D	5504 SEAM SEALER	SCHNEE MOREHEAD INC

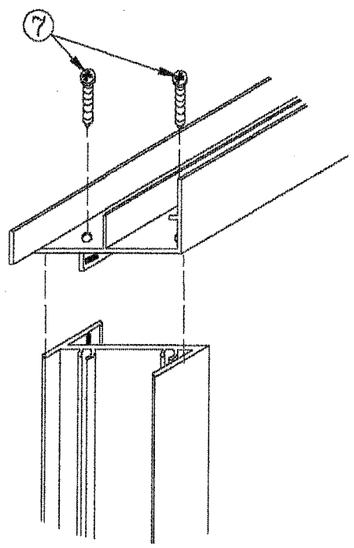

TOP CORNER

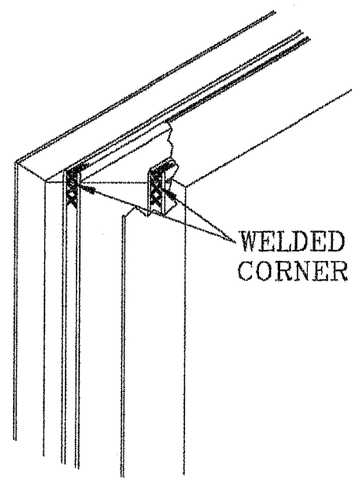

DETAIL-C

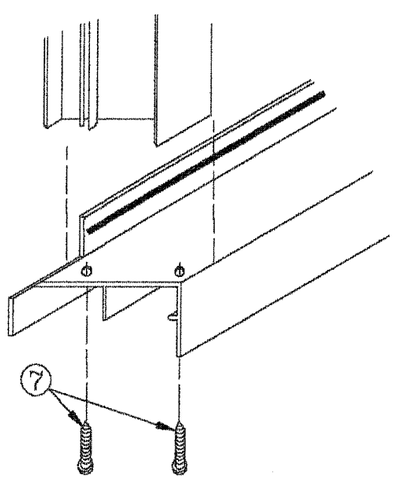

BOTTOM CORNER

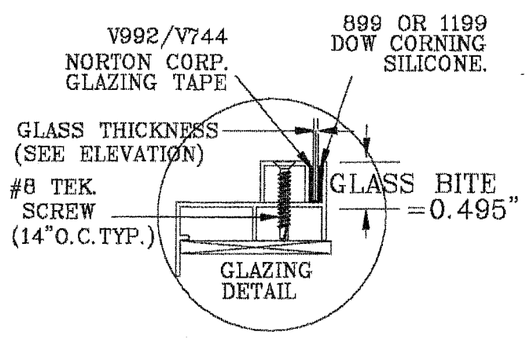

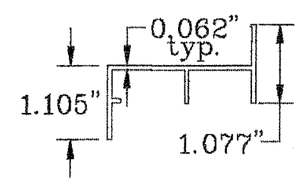

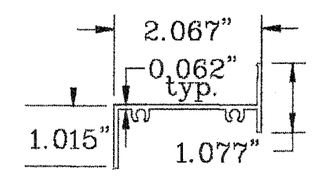

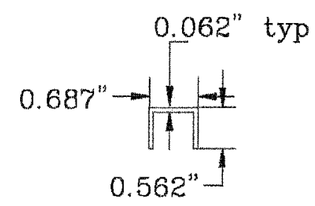

APPROVED AS COMPLYING WITH THE
SOUTH FLORIDA BUILDING CODE
DATE 03-22-2001
BY Ishaq I. Chanda
PRODUCT CONTROL DIVISION
BUILDING CODE COMPLIANCE OFFICE
ACCEPTANCE NO. 00-0808.05

NON-IMPACT RESISTANT

Sergio Alcorta
SERGIO J. ALCORTA
STRUCTURAL ENGR.
FLA. PE # 14464

APPLIED ENGINEERING CONCEPTS, INC.
P.O. BOX 12-6403 HIALEAH, FL. 33012
TEL. (305) 820-0550
FAX. (305) 820-9620

SERIES: 435 ALUMINUM WINDOW
DESIGNER WINDOW

NORANDEX
4505 30th STREET WEST
BRADENTON, FL. 34207
PHONE: (941) 755-1591

NO.	DATE	REVISIONS DESCRIPTION
1	2/28/01	M.D.C.C. CORRECTIONS

DATE: 2/20/01
SCALE: N.T.S.
DWG. BY: J.S.
CHK. BY:
JOB NO.: 01-0208
SHEET 4 OF 4
DWG. NO.: 01-0208