MIAMI-DADE COUNTY, FLORIDA
METRO-DADE FLAGLER BUILDING

BUILDING CODE COMPLIANCE OFFICE
METRO-DADE FLAGLER BUILDING
140 WEST FLAGLER STREET, SUITE 1603
MIAMI, FLORIDA 33130-1563
(305) 375-2901 FAX (305) 375-2908

CONTRACTOR LICENSING SECTION
(305) 375-2527 FAX (305) 375-2558

CONTRACTOR ENFORCEMENT DIVISION
(305) 375-2966 FAX (305) 375-2908

PRODUCT CONTROL DIVISION
(305) 375-2902 FAX (305) 372-6339

PRODUCT CONTROL NOTICE OF ACCEPTANCE

Eastern Metal Supply, Inc.
3600 23rd Ave., South
Lake Worth ,FL 33461

Your application for Notice of Acceptance (NOA) of:
0.072" Extruded Bertha Aluminum Storm Panels Shutter
under Chapter 8 of the Code of Miami-Dade County governing the use of Alternate Materials and Types of Construction, and completely described herein, has been recommended for acceptance by the Miami-Dade County Building Code Compliance Office (BCCO) under the conditions specified herein.

This NOA shall not be valid after the expiration date stated below. BCCO reserves the right to secure this product or material at any time from a jobsite or manufacturer's plant for quality control testing. If this product or material fails to perform in the approved manner, BCCO may revoke, modify, or suspend the use of such product or material immediately. BCCO reserves the right to revoke this approval, if it is determined by BCCO that this product or material fails to meet the requirements of the South Florida Building Code.

The expense of such testing will be incurred by the manufacturer.

ACCEPTANCE NO.: 00-0809.01
EXPIRES: 10/30/2003

Raul Rodriguez
Chief Product Control Division

THIS IS THE COVERSHEET, SEE ADDITIONAL PAGES FOR SPECIFIC AND GENERAL CONDITIONS
BUILDING CODE & PRODUCT REVIEW COMMITTEE

This application for Product Approval has been reviewed by the BCCO and approved by the Building Code and Product Review Committee to be used in Miami-Dade County, Florida under the conditions set forth above.

Francisco J. Quintana, R.A.
Director
Miami-Dade County
Building Code Compliance Office

APPROVED: 10/12/2000

Eastern Metal Supply, Inc.

ACCEPTANCE No. : 00-0809.01

APPROVED : OCT 1 2 2000

EXPIRES : 10/30/2003

NOTICE OF ACCEPTANCE: SPECIFIC CONDITIONS

1. SCOPE

This renews the Notice of Acceptance No. 96-0913.01, which was issued on October 30, 1997. It approves an Aluminum Storm Panel Shutter, as described in Section 2 of this Notice of Acceptance, designed to comply with the South Florida Building Code, 1994 Edition for Miami-Dade County, for the locations where the pressure requirements, as determined by SFBC Chapter 23, do not exceed the Design Pressure Rating values indicated in the approved drawings.

2. PRODUCT DESCRIPTION

This Aluminum Storm Panel shutter and its components shall be constructed in strict compliance with the following documents: Drawing No. 96-144, titled " Extruded Bertha Storm Panel", prepared by Tilteco, Inc., dated May 14, 1996, last revision #2 dated October 2, 1997, sheets 1 through 8 of 8, signed and sealed by Walter A. Tillit Jr., P.E., bearing the Miami-Dade County Product Control Approval and Renewal stamps with the Notice of Acceptance numbers and approval dates by the Miami-Dade County Product Control Division. These documents shall hereinafter be referred to as the approved drawings.

3. LIMITATIONS

All permanent set components, included but not limited to embedded anchor bolts, threaded cones, metal shields, headers and sills, must be protected against corrosion, contamination and damage at all times.

4. INSTALLATION

This Aluminum Storm Panel Shutter and its components shall be installed in strict compliance with the approved drawings.

5. LABELING

Each panel shall bear a permanent label with the manufacturer's name or logo, city, state and the following statement: "Miami-Dade County Product Control Approved".

6. BUILDING PERMIT REQUIREMENTS

6.1 Application for building permit shall be accompanied by copies of the following:

- **6.1.1** This Notice of Acceptance.
- **6.1.2** Duplicate copies of the approved drawings, as identified in Section 2 of this Notice of Acceptance, clearly marked to show the components selected for the proposed installation.
- **6.1.3** Any other documents required by the Building Official or the South Florida Building Code (SFBC) in order to properly evaluate the installation of this system.

Helmy A. Makar, P.E. -Product Control Examiner
Product Control Division

Eastern Metal Supply, Inc.

ACCEPTANCE No. : 00-0809.01

APPROVED : OCT 1 2 2000

EXPIRES : 10/30/2003

NOTICE OF ACCEPTANCE: STANDARD CONDITIONS

1 Renewal of this Acceptance (approval) shall be considered after a renewal application has been filed and the original submitted documents, including test-supporting data, engineering documents, are no older than eight (8) years.

2. Any and all approved products shall be permanently labeled with the manufacturer's name, city, state, and the following statement: "Miami-Dade County Product Control Approved", or as specifically stated in the specific conditions of this Acceptance.

3. Renewals of Acceptance will not be considered if:
   a. There has been a change in the South Florida Building Code affecting the evaluation of this product and the product is not in compliance with the code changes.
   b. The product is no longer the same product (identical) as the one originally approved.
   c. If the Acceptance holder has not complied with all the requirements of this acceptance, including the correct installation of the product.
   d. The engineer, who originally prepared, signed and sealed the required documentation initially submitted, is no longer practicing the engineering profession.

4. Any revision or change in the materials, use, and/or manufacture of the product or process shall automatically be cause for termination of this Acceptance, unless prior written approval has been requested (through the filing of a revision application with appropriate fee) and granted by this office.

5. Any of the following shall also be grounds for removal of this Acceptance:
   a. Unsatisfactory performance of this product or process.
   b. Misuse of this Acceptance as an endorsement of any product, for sales, advertising or any other purposes.

6. The Notice of Acceptance number preceded by the words Miami-Dade County, Florida, and followed by the expiration date may be displayed in advertising literature. If any portion of the Notice of Acceptance is displayed, then it shall be done in its entirety.

7. A copy of this Acceptance as well as approved drawings and other documents, where it applies, shall be provided to the user by the manufacturer or its distributors and shall be available for inspection at the job site at all time. The engineer needs not reseal the copies.

8. Failure to comply with any section of this Acceptance shall be cause for termination and removal of Acceptance.

9. This Notice of Acceptance consists of pages 1, 2 and this last page 3.

END OF THIS ACCEPTANCE

Helmy A. Makar

Helmy A. Makar, P.E. -Product Control Examiner
Product Control Division

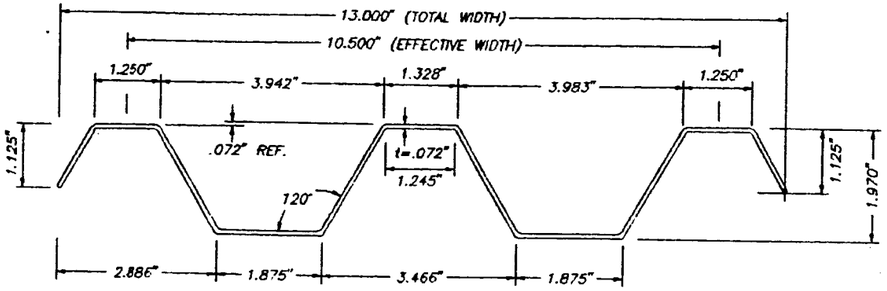

① PANEL

SCALE : 3/8" = 1"

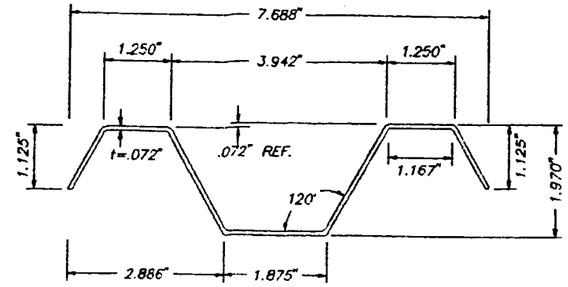

1A HALF PANEL

SCALE : 3/8" = 1"

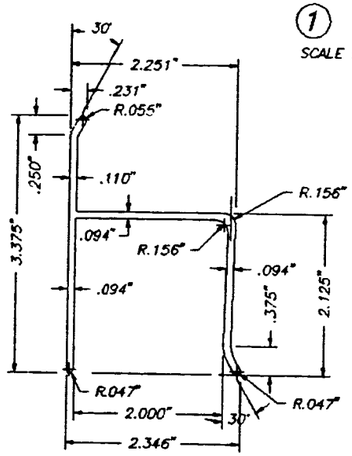

② "h" HEADER

SCALE : 1/2" = 1"

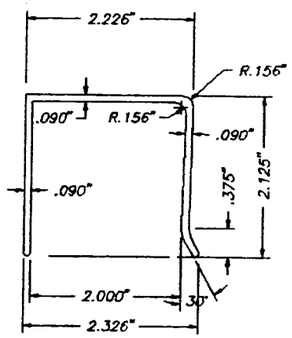

③ "U" HEADER

SCALE : 1/2" = 1"

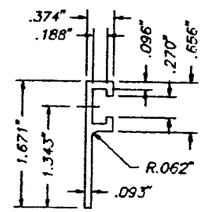

④ "F" TRACK

SCALE : 1/2" = 1"

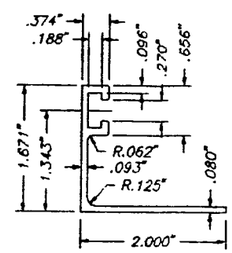

⑤ "F" TRACK ANGLE

SCALE : 1/2" = 1"

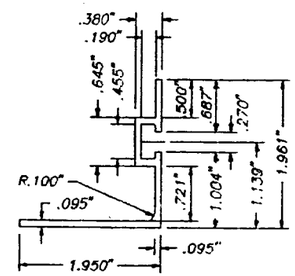

⑥ REVERSED "F" TRACK ANGLE

SCALE : 1/2" = 1"

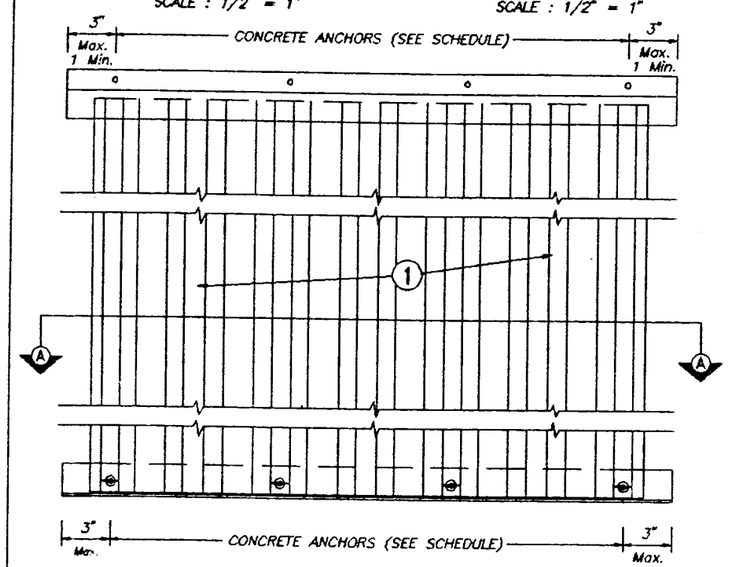

STORM PANEL TYPICAL ELEVATION

N. T. S.

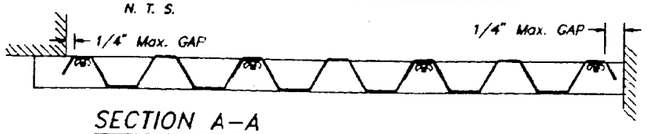

SECTION A–A

N. T. S.

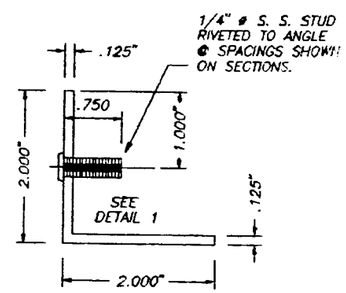

⑦ STUDDED ANGLE

6063–T5 Alum. ALLOY

SCALE : 1/2" = 1"

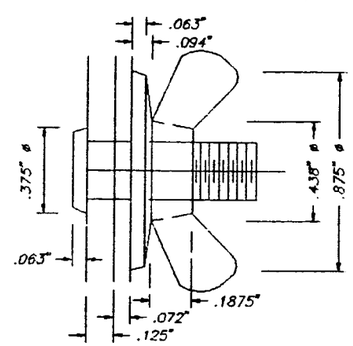

DETAIL 1: STUD W/ WING NUT

SCALE : 1/2" = 1"

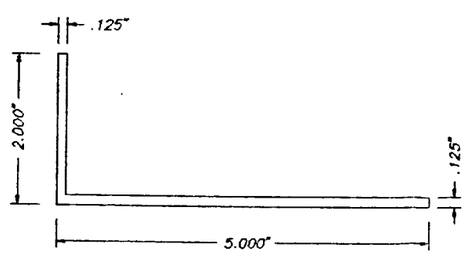

⑧ 2" x 5" (Max.) x .125" ANGLE

SCALE : 1/2" = 1"

GENERAL NOTES:

1. EXTRUDED BERTHA STORM PANEL HAS BEEN DESIGNED IN ACCORDANCE WITH THE DADE COUNTY, 1994 EDITION OF THE SOUTH FLORIDA BUILDING CODE.
   DESIGN WIND LOADS SHALL BE DETERMINED AS PER SECTION 6 OF ASCE 7–88, WITH 110 m.p.h. DESIGN WIND SPEED.
   STORM PANEL'S ADEQUACY FOR IMPACT AND FATIGUE RESISTANCE HAS BEEN VERIFIED IN ACCORDANCE WITH SECTIONS 2315 & 2314 RESPECTIVELY OF THE ABOVE MENTIONED CODE.
2. ALL ALUMINUM EXTRUDED PANELS SHALL BE 6063–T6 ALLOY.
3. ALL ALUMINUM EXTRUSIONS SHALL BE 6063–T6 ALLOY UNLESS OTHERWISE NOTED.
4. ALL SCREWS TO BE STAINLESS STEEL 304 OR 316 SERIES.
5. BOLTS TO BE 2024–T4 ALUMINUM ALLOY, GALVANIZED OR STAINLESS STEEL, WITH 36 ksi MINIMUM YIELD POINT.
6. ANCHORS TO WALL SHALL BE AS FOLLOWS: (UNLESS OTHERWISE NOTED)
   (A) TO EXISTING POURED CONCRETE:
   - 1/4" ø TAPCON ANCHORS, AS MANUFACTURED BY I.T.W. RAMSET OR ELCO INDUSTRIES.
   - 1/4" ø RAWL ZAMAC NAILIN, AS MANUFACTURED BY THE RAWL PLUG CO.
   - 1/4" ø x 7/8" RAWL CALK–IN ANCHORS, AS MANUFACTURED BY THE RAWL PLUG COMPANY.

   NOTES:
   A.1) MINIMUM EMBEDMENT INTO POURED CONCRETE OF TAPCON ANCHORS SHALL BE 1 3/4" & 1 1/2" FOR RAWL ZAMAC NAILIN.
   A.2) 7/8" RAWL CALK–IN ANCHORS SHALL BE ENTIRELY EMBEDDED INTO THE POURED CONCRETE. NO EMBEDMENT INTO STUCCO SHALL BE PERMITTED.
   1/4" ø–20 SCREWS USED SHALL BE 1 1/2" LONG MINIMUM SHOULD STUCCO EXIST.
   A.3) IN CASE THAT PRECAST STONE, PRECAST CONCRETE PANELS, OR PAVERS BE FOUND ON THE EXISTING WALL OR FLOOR, ANCHORS SHALL BE LONG ENOUGH TO REACH THE MAIN STRUCTURE BEHIND SUCH PANELS, ANCHORAGE SHALL BE AS INDICATED ON NOTES A.1) & A.2) ABOVE.

   (B) TO EXISTING CONCRETE BLOCK WALL:
   - 1/4" ø TAPCON ANCHORS, AS MANUFACTURED BY I.T.W. RAMSET OR ELCO INDUSTRIES.
   - 1/4" ø RAWL ZAMAC NAILIN, AS MANUFACTURED BY THE RAWL PLUG CO.
   - 1/4" ø x 7/8" RAWL CALK–IN ANCHORS AS MANUFACTURED BY THE RAWL PLUG COMPANY.

   NOTES:
   B.1) MINIMUM EMBEDMENT OF TAPCON ANCHORS AND RAWL ZAMAC NAILIN, INTO THE CONCRETE BLOCK UNIT SHALL BE 1 1/4".
   B.2) 7/8" RAWL CALK–IN ANCHORS SHALL BE ENTIRELY EMBEDDED INTO THE CONCRETE BLOCK UNIT. NO EMBEDMENT INTO STUCCO SHALL BE PERMITTED.
   1/4" ø–20 SCREWS USED SHALL BE 1 1/2" LONG MINIMUM SHOULD STUCCO EXIST, AND 1" MINIMUM FOR WALLS WITH NO STUCCO.
   B.3) IN CASE THAT PRECAST STONE OR PRECAST CONCRETE PANELS BE FOUND ON THE EXISTING WALL, ANCHORS SHALL BE LONG ENOUGH TO REACH THE MAIN STRUCTURE BEHIND SUCH PANELS. ANCHORAGE SHALL BE 1 1/4" MINIMUM FOR ANCHORS MENTIONED IN B.1). & 7/8" FOR ANCHORS MENTIONED IN B.2).

   C) ANCHORS SHALL BE INSTALLED FOLLOWING ALL OF THE RECOMMENDATIONS AND SPECIFICATIONS OF THE ANCHOR'S MANUFACTURER.
7. PANELS MAY ALSO BE INSTALLED HORIZONTALLY FOLLOWING INSTALLATION DETAILS SHOWN ON SECTIONS 2, 3, 7, 8, & 9 (SHEET 2, 3 & 4 OF 8).
8. IT SHALL BE THE RESPONSIBILITY OF THE CONTRACTOR TO VERIFY THE SOUNDNESS OF THE STRUCTURE WHERE SHUTTER IS TO BE ATTACHED TO INSURE PROPER ANCHORAGE.
9. SHUTTER MANUFACTURER'S LABEL SHALL BE PLACED AT BOTTOM OF EACH PANEL.
   LABEL SHALL READ AS FOLLOWS:
   EASTERN METAL SUPPLY, INC.
   LAKE WORTH, FLORIDA
   DADE COUNTY PRODUCT CONTROL APPROVED.

PRODUCT RENEWED

ACCEPTANCE No. 00-0809.01

EXPIRATION DATE 10/30/2003

By Helmy A. Moker
PRODUCT CONTROL DIVISION
BUILDING CODE COMPLIANCE OFFICE

APPROVED AS COMPLYING WITH THE SOUTH FLORIDA BUILDING CODE
DATE October 30 1997
BY Helmy A. Moker
PRODUCT CONTROL DIVISION
BUILDING CODE COMPLIANCE OFFICE
ACCEPTANCE NO. 96-0913.01

DADE COUNTY

Walter A. Tillit Jr. 10/2/97

TILTECO INC.
TILLIT TESTING & ENGINEERING COMPANY
6595 N.W. 36th St., Ste. 217, VIRGINIA GARDENS, FL 33166
Phone : (305)871-1536 Fax : (305)871-1531

WALTER A. TILLIT Jr. P. E.
FLORIDA Lic. # 44167

EXTRUDED BERTHA STORM PANEL

EASTERN METAL SUPPLY, INC.
3600 23rd. Ave. SOUTH
LAKE WORTH, FL 33461

AS SHOWN SCALE

5/14/96 DATE

96 – 144 DRAWING No

SHEET 1 OF 8

REV. NO	DESCRIPTION	DATE	REV. No	DESCRIPTION	DATE
1	GENERAL	5/16/97	3		
2	GENERAL	10/2/97	4		

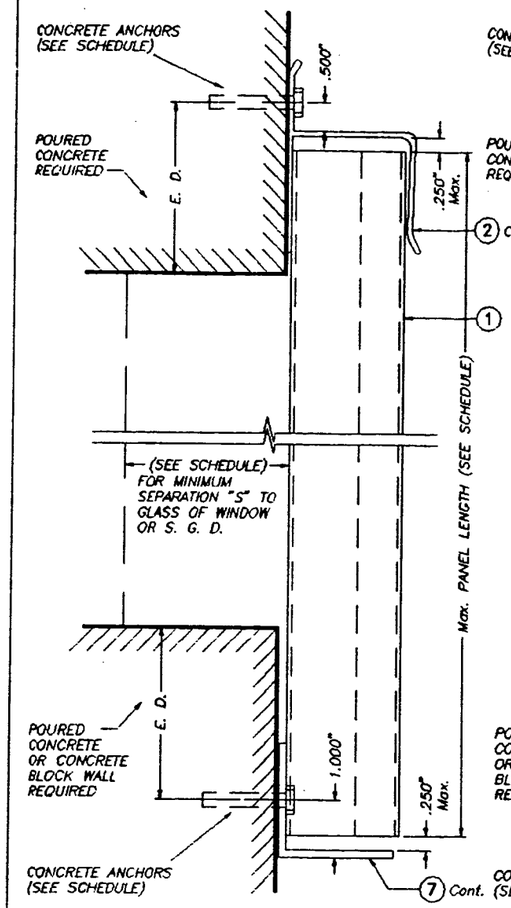

SECTION @ ANCHOR

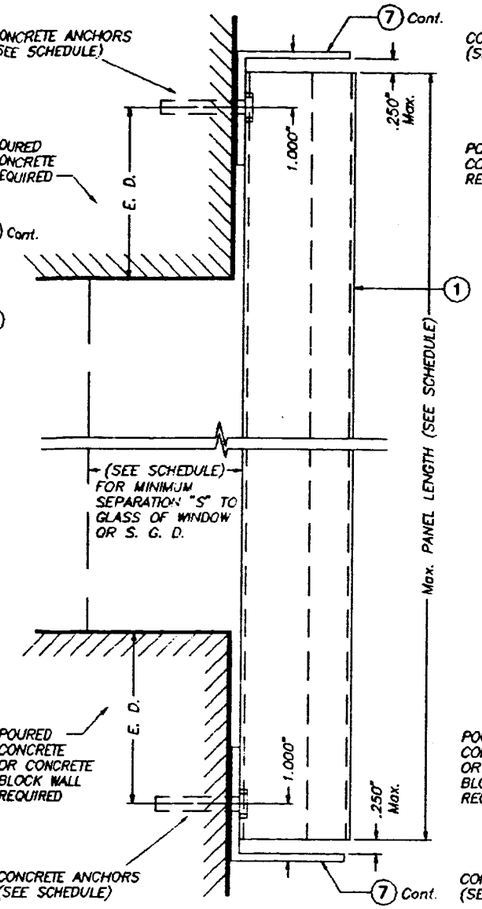

WALL MOUNTING INSTALLATION SECTION 2

SCALE : 3/8" = 1"

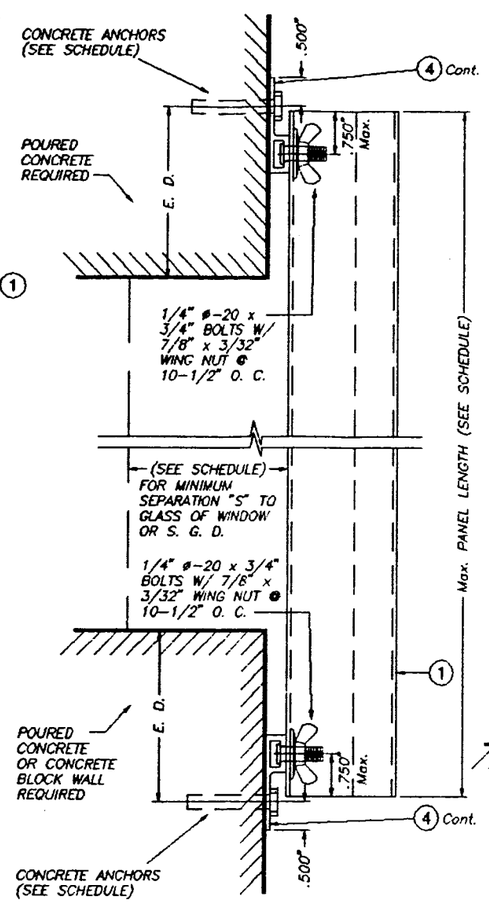

WALL MOUNTING INSTALLATION SECTION 3

SCALE : 3/8" = 1"

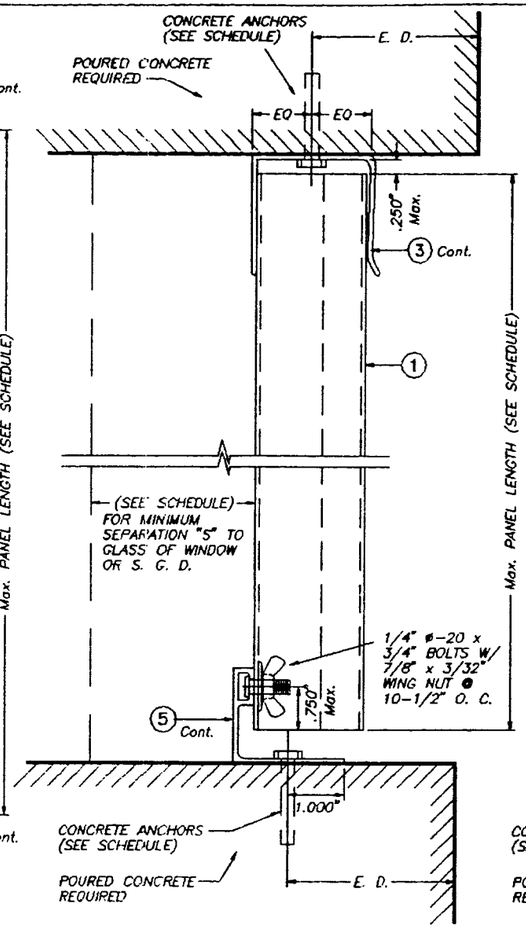

CEILING & FLOOR MOUNTING INSTALLATION – SECTION 4

SCALE : 3/8" = 1"

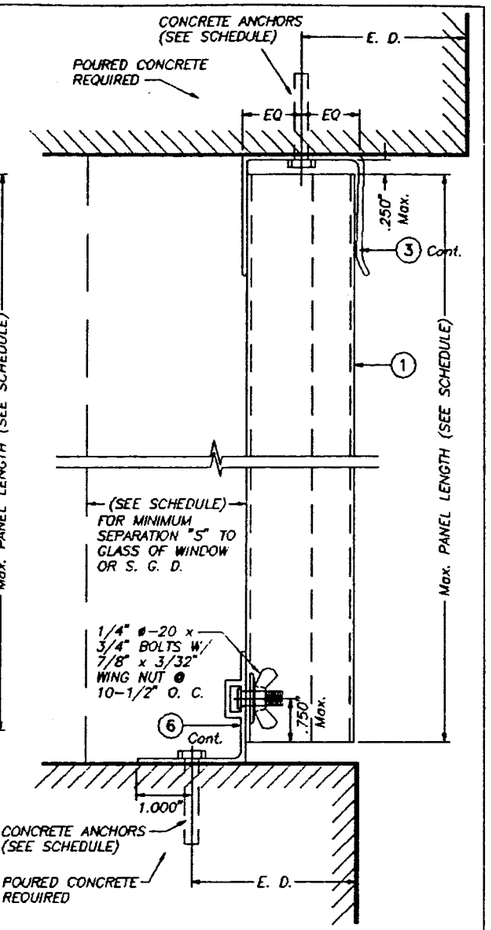

CEILING & FLOOR MOUNTING INSTALLATION – SECTION 5

SCALE : 3/8" = 1"

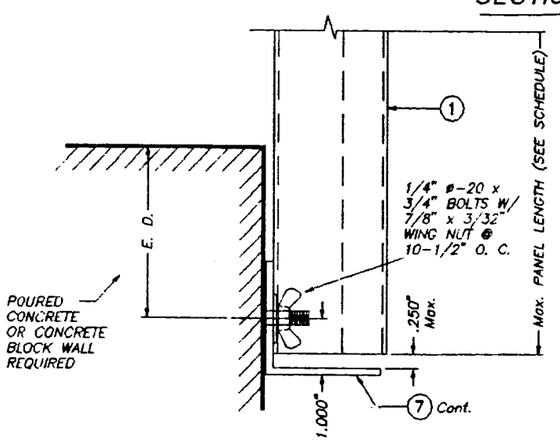

SECTION @ STUD

WALL MOUNTING INSTALLATION SECTION 1

SCALE : 3/8" = 1"

NOTE : DETAIL OF SECTION @ STUD VALID ALSO FOR WALL MOUNTING INSTALLATION – SECTION 2

E. D. = EDGE DISTANCE (SEE SCHEDULE ON SHEETS 5 & 6 OF 8)

NOTE FOR COMBINATION OF SECTIONS :

WALL/FLOOR/CEILING MOUNTING SECTIONS CAN BE COMBINED IN ANY WAY TO SUIT ANY INSTALLATION.

PRODUCT RENEWED

ACCEPTANCE No. 00-0809.01

EXPIRATION DATE 10/30/2003

By Helmy A. Mekar

PRODUCT CONTROL DIVISION
BUILDING CODE COMPLIANCE OFFICE

APPROVED AS COMPLYING WITH THE SOUTH FLORIDA BUILDING CODE

DATE October 30 1997

BY Helmy A. Mekar

PRODUCT CONTROL DIVISION
BUILDING CODE COMPLIANCE OFFICE

ACCEPTANCE NO. 96-091301

DADE COUNTY

10/7/97

TILTECO INC.
TILLIT TESTING & ENGINEERING COMPANY
5595 N.W. 36th St., Ste. 217, VIRGINIA GARDENS, FL 33166
Phone (305)871-1530 Fax (305)871-1531
WALTER A. TILLIT Jr. P. E.
FLORIDA Lic. # 44167

EXTRUDED BERTHA STORM PANEL

EASTERN METAL SUPPLY, INC.
3600 23rd. Ave. SOUTH
LAKE WORTH, FL 33461-3247

AS SHOWN SCALE

5/14/96 DATE

96 – 144 DRAWING No

REV. NO	DESCRIPTION	DATE	REV. No	DESCRIPTION	DATE
1	GENERAL	5/16/97	3		
2	GENERAL	10/2/97	4		

SHEET 2 OF 8

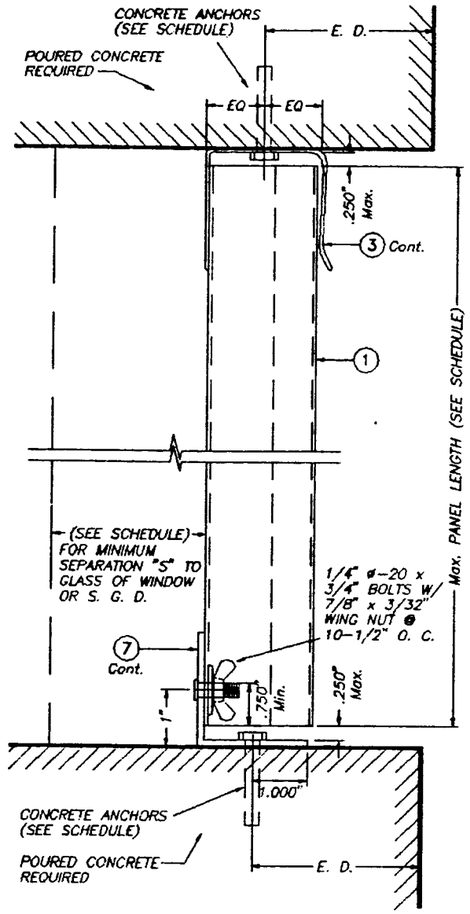

CEILING & FLOOR MOUNTING INSTALLATION – SECTION 6

SCALE : 3/8" = 1"

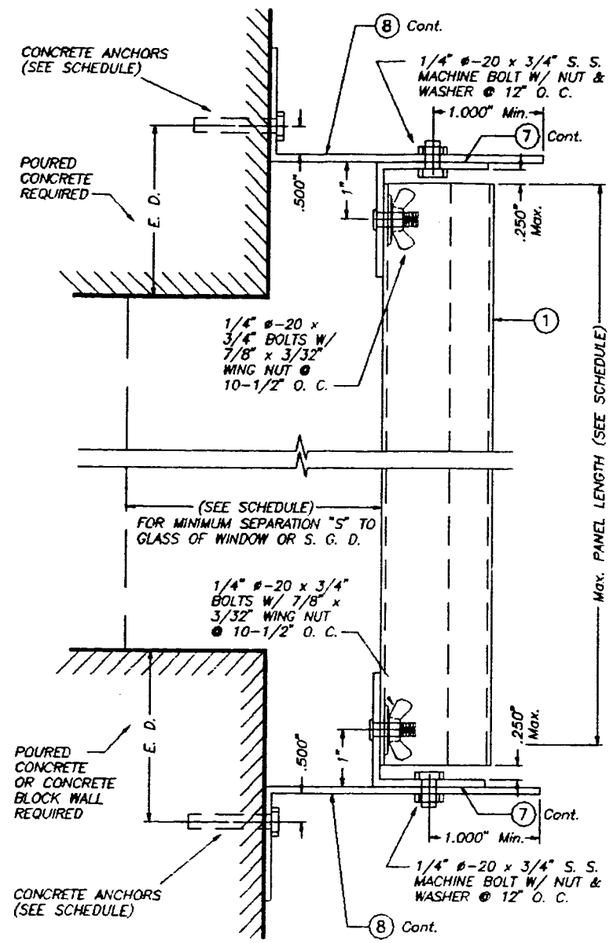

BUILD-OUT INSTALLATION – SECTION 7

SCALE : 3/8" = 1"

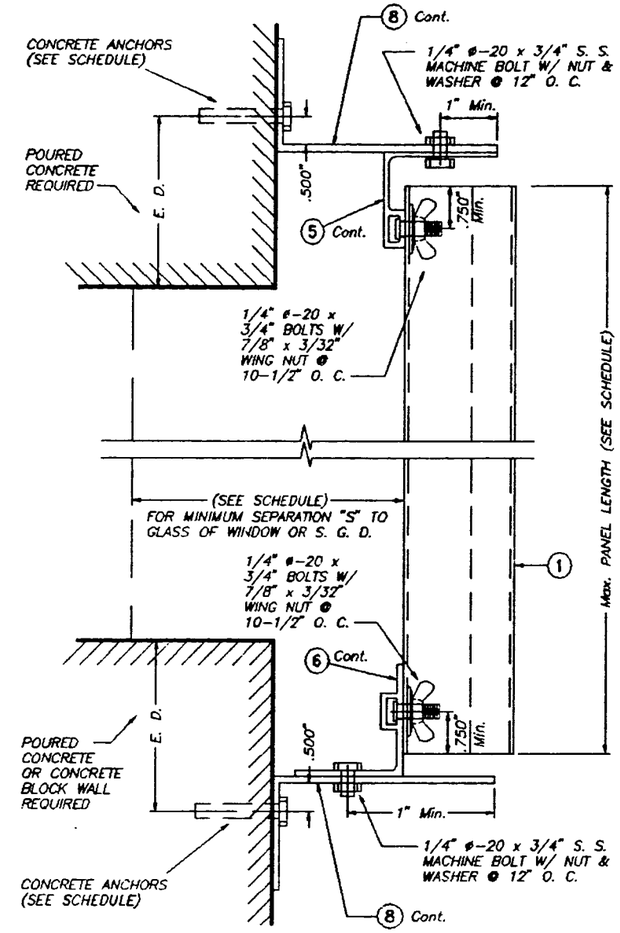

BUILD-OUT INSTALLATION – SECTION 8

SCALE : 3/8" = 1"

E. D. = EDGE DISTANCE (SEE SCHEDULE ON SHEETS 5 & 6 OF 8)

NOTE FOR COMBINATION OF SECTIONS :

WALL/FLOOR/CEILING MOUNTING SECTIONS CAN BE COMBINED IN ANY WAY TO SUIT ANY INSTALLATION.

PRODUCT RENEWED

ACCEPTANCE No. 00-0809.01

EXPIRATION DATE 10/30/2003

By Helena A. Maher

PRODUCT CONTROL DIVISION
BUILDING CODE COMPLIANCE OFFICE

APPROVED AS COMPLYING WITH THE SOUTH FLORIDA BUILDING CODE.

DATE October 30 1997

BY Helena A. Maher

PRODUCT CONTROL DIVISION
BUILDING CODE COMPLIANCE OFFICE

ACCEPTANCE NO. 96-0913.01

DADE COUNTY

TILTECO INC.
TILLIT TESTING & ENGINEERING COMPANY
6595 N.W. 36th. St. Ste. 217, VIRGINIA GARDENS, FL 33166
Phone : (305)871-1536 Fax : (305)871-1531

WALTER A. TILLIT Jr. P. E.
FLORIDA Lic. # 44167

EXTRUDED BERTHA STORM PANEL

EASTERN METAL SUPPLY, INC.
3600 23rd. Ave. SOUTH
LAKE WORTH, FL 33461-3247

REV. NO	DESCRIPTION	DATE	REV. No	DESCRIPTION	DATE
1	GENERAL	3/18/97	3		
2	GENERAL	10/2/97	4		

AS SHOWN SCALE

5/14/96 DATE

96 – 144 DRAWING No

SHEET 3 OF 8

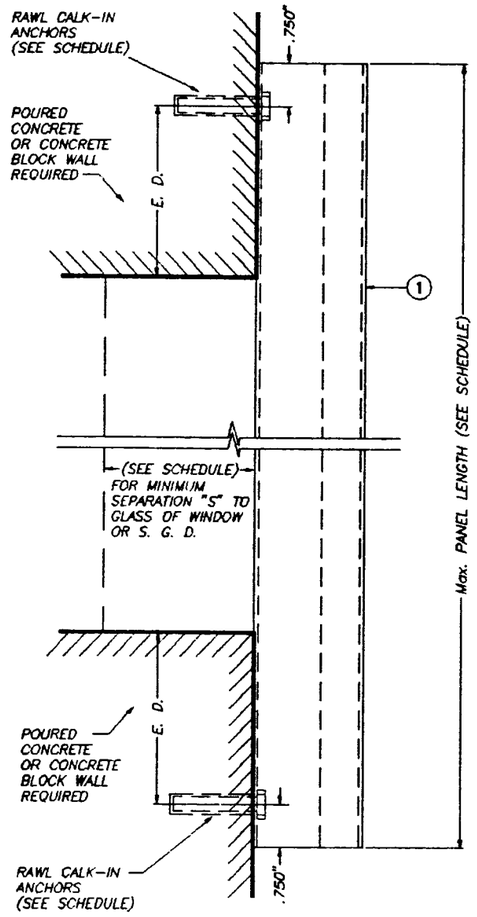

WALL MOUNTING INSTALLATION (D. M.) – SECTION 9

SCALE : 3/8" = 1"

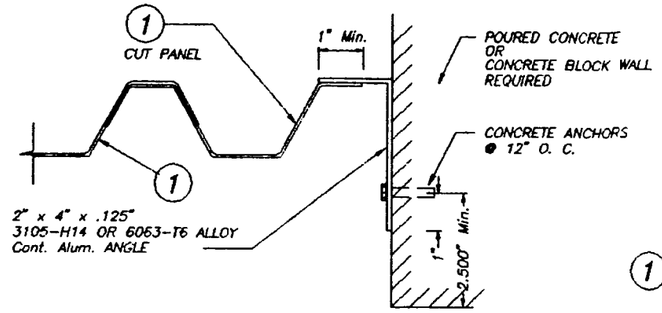

CASE A (Plan)

SCALE: 1/4" = 1"

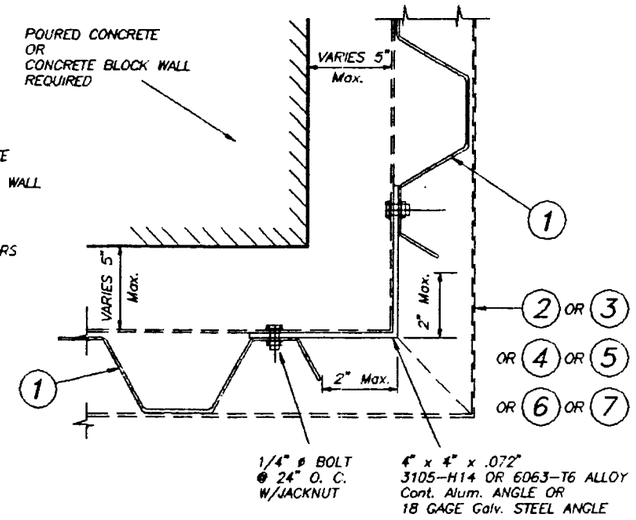

CASE B (Plan)

SCALE: 1/4" = 1"

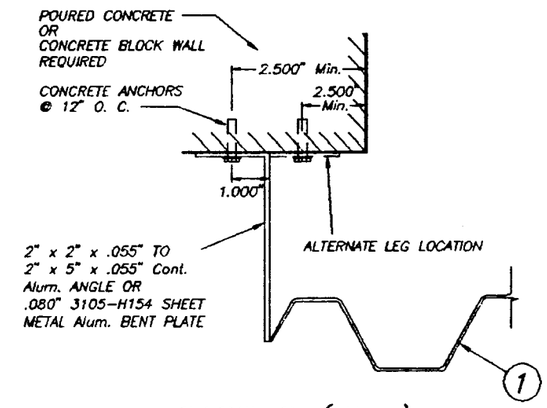

CASE C (Plan)

SCALE: 1/4" = 1"

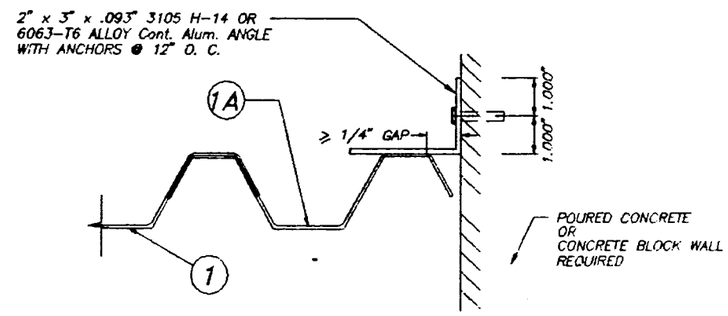

CASE D (Plan)

SCALE: 1/4" = 1"

MAXIMUM DESIGN PRESSURE RATING "W" (p.s.f.) AND CORRESPONDING MAXIMUM PANEL LENGTH "L" SCHEDULE

MAXIMUM DESIGN LOAD W (p.s.f.)	Max. PANEL LENGTH L (ft.)	MINIMUM SEPARATION TO GLASS	APPLICABLE TO SECTIONS # & ANY COMBINATION OF THEM (SEE SHEETS 2 3 & 4 OF 8)
60.0, -72.0	7'-6"	2 1/8"	1, 2, 3, 4, 5, 6, 7, 8, & 9
60.0, -72.0	7'-6" TO 9'-0"	2 3/8"	1, 2, 3, 4, 5, 6, 7, 8, & 9
60.0, -72.0	>9'-0" TO 10'-0"	2 15/16"	7, 8 & 9
30.0, -42.0	>9'-0" TO 11'-10"	3"	2 & 3
30.0, -42.0	>10'-0" TO 11'-10"	3"	9

E. D. = EDGE DISTANCE (SEE SCHEDULE ON SHEET 5 & 6 OF 8)

END CLOSURES DETAILS

PRODUCT RENEWED

ACCEPTANCE No. 00-0809.01

EXPIRATION DATE 10/30/2003

By Helmy A. Maker

PRODUCT CONTROL DIVISION
BUILDING CODE COMPLIANCE OFFICE

APPROVED AS COMPLYING WITH THE SOUTH FLORIDA BUILDING CODE
DATE OCTOBER 30 1997
BY Helmy A. Maker
PRODUCT CONTROL DIVISION
BUILDING CODE COMPLIANCE OFFICE
ACCEPTANCE NO. 96-0913.01

DADE COUNTY

Walter A. Tillit
10/2/97

TILTECO INC.
TILLIT TESTING & ENGINEERING COMPANY
6595 N.W. 36th St., Ste. 217, VIRGINIA GARDENS, FL 33166
Phone (305)871-1530 Fax (305)871-1531

WALTER A. TILLIT Jr. P. E.
FLORIDA Lic. # 44167

EXTRUDED BERTHA STORM PANEL

EASTERN METAL SUPPLY, INC.
3600 23rd. Ave. SOUTH
LAKE WORTH, FL 33461-3247

REV. NO	DESCRIPTION	DATE	REV. No	DESCRIPTION	DATE
1	GENERAL	5/16/97	3		
2	GENERAL	10/2/97	4		

AS SHOWN SCALE

5/14/96 DATE

96 – 144 DRAWING No

SHEET 4 OF 8

MAXIMUM DESIGN PRESSURE RATING "W" (p.s.f.) AND CORRESPONDING MAXIMUM ANCHOR SPACING SCHEDULE FOR INSTALLATIONS INTO CONCRETE AND C.B.S. STRUCTURES *

E. D. = EDGE DISTANCE

MAXIMUM DESIGN LOAD W (p.s.f.)	MAXIMUM ANCHORS SPACING FOR E. D. = 3 1/2" **						APPLICABLE TO SECTIONS # & ANY COMBINATION OF THEM	MAXIMUM PANEL LENGTH "L" (ft.)
	TAPCONS		RAWL ZAMAC NAILIN		RAWL CALK-IN			
	TO CONCRETE	TO MASONRY	TO CONCRETE	TO MASONRY	TO CONCRETE	TO MASONRY		
+60.0, -72.0	12"	N/A	12"	N/A	12"	N/A	1 (TOP)	9'-0" OR LESS
	12"	7 1/2"	12"	9"	12"	10 1/2"	1 (BOTTOM)	
	12"	N/A	12"	N/A	12"	N/A	2 (TOP)	
	12"	7 1/2"	12"	9"	12"	10 1/2"	2 (BOTTOM)	
	12"	N/A	12"	N/A	12"	N/A	3 (TOP)	
	12"	7 1/2"	12"	9"	12"	10 1/2"	3 (BOTTOM)	
	12"	N/A	8"	N/A	12"	N/A	4, 5, 6 (TOP)	
	9"	N/A	5 1/2"	N/A	9 1/2"	N/A	4 (BOTTOM)	
	9 1/2"	N/A	6"	N/A	10"	N/A	5 (BOTTOM)	
	10 1/2"	N/A	7"	N/A	11"	N/A	6 (BOTTOM)	
	12"	N/A	12"	N/A	12"	N/A	7 (TOP)	
	12"	7 1/2"	12"	9"	12"	10 1/2"	7 (BOTTOM)	
	12"	N/A	11 1/2"	N/A	12"	N/A	8 (TOP)	
	12"	7 1/2"	12"	9"	12"	10 1/2"	8 (BOTTOM)	
	N/A	N/A	N/A	N/A	10 1/2"	10 1/2"	9 (TOP/BOTTOM)	

* SEE SHEET 7 & 8 OF 8 FOR ANCHORS TYPE & SPACING FOR INSTALLATIONS INTO WOOD FRAME BUILDINGS.

** MAXIMUM ANCHOR SPACINGS ARE VALID FOR 3 1/2" EDGE DISTANCE. FOR E. D. LESS THAN 3 1/2", REDUCE ANCHOR SPACING BY MULTIPLYING SPACINGS SHOWN ON SCHEDULE BY THE FOLLOWING FACTORS.

ACTUAL E. D.	FACTOR	
	TAPCON/ZAMAC NAILIN/ PANELMATES	RAWL CALK-IN
3"	.86	.75
2 1/2"	.71	.50
2"	.50	–

PRODUCT RENEWED

ACCEPTANCE No. 00-0809.01

EXPIRATION DATE 10/30/2003

By Helmy A. Maher

PRODUCT CONTROL DIVISION
BUILDING CODE COMPLIANCE OFFICE

APPROVED AS COMPLYING WITH THE SOUTH FLORIDA BUILDING CODE

DATE OCTOBER 30 1997

BY Helmy A. Maher

PRODUCT CONTROL DIVISION

BUILDING CODE COMPLIANCE OFFICE

ACCEPTANCE NO. 96-0913.01

DADE COUNTY

10/2/97

TILTECO INC.

TILLIT TESTING & ENGINEERING COMPANY

6595 N.W. 36th. St., Ste. 217, VIRGINIA GARDENS, FL 33166
Phone : (305)871-1530 Fax : (305)871-1531

WALTER A. TILLIT Jr. P. E.
FLORIDA Lic. # 44167

EXTRUDED BERTHA STORM PANEL

EASTERN METAL SUPPLY, INC
3600 23rd. Ave. SOUTH
LAKE WORTH, FL 33461-3247

REV. NO	DESCRIPTION	DATE	REV. No	DESCRIPTION	DATE
1	GENERAL	5/16/97	3		
2	GENERAL	10/2/97	4		

AS SHOWN SCALE

5/14/96 DATE

96 – 144 DRAWING No

SHEET 5 OF 8

E. D. = EDGE DISTANCE

MAXIMUM DESIGN PRESSURE RATING "W" (p.s.f.) AND CORRESPONDING MAXIMUM ANCHOR SPACING SCHEDULE FOR INSTALLATIONS INTO CONCRETE AND C.B.S. STRUCTURES *

MAXIMUM DESIGN LOAD W (p.s.f.)	MAXIMUM ANCHORS SPACING FOR E. D. = 3 1/2" **						APPLICABLE TO SECTIONS # & ANY COMBINATION OF THEM	MAXIMUM PANEL LENGTH "L" (ft.)
	TAPCONS		RAWL ZAMAC NAILIN		RAWL CALK-IN			
	TO CONCRETE	TO MASONRY	TO CONCRETE	TO MASONRY	TO CONCRETE	TO MASONRY		
+60.0, −72.0	12"	N/A	10 1/2"	N/A	12"	N/A	7 (TOP)	>9'-0" TO 10'-0"
	12"	6 1/2"	10 1/2"	8"	12"	9 1/2"	7 (BOTTOM)	
	12"	N/A	8 1/2"	N/A	12"	N/A	8 (TOP)	
	12"	6 1/2"	10 1/2"	7 1/2"	12"	9 1/2"	8 (BOTTOM)	
	N/A	N/A	N/A	N/A	10 1/2"	10 1/2"	9 (TOP/BOTTOM)	
+30.0, −42.0	12"	N/A	12"	N/A	12"	N/A	2 (TOP)	>9'-0" TO 11'-10"
	12"	9 1/2"	12"	11 1/2"	12"	12"	2 (BOTTOM)	
	12"	N/A	11 1/2"	N/A	12"	N/A	3 (TOP)	
	12"	9 1/2"	12"	11 1/2"	12"	12"	3 (BOTTOM)	
+30.0, −42.0	N/A	N/A	N/A	N/A	10 1/2"	10 1/2"	9 (TOP/BOTTOM)	>10'-0" TO 11'-10"

* SEE SHEET 7 & 8 OF 8 FOR ANCHORS TYPE & SPACING FOR INSTALLATIONS INTO WOOD FRAME BUILDINGS.

** MAXIMUM ANCHOR SPACINGS ARE VALID FOR 3 1/2" EDGE DISTANCE. FOR E. D. LESS THAN 3 1/2", REDUCE ANCHOR SPACING BY MULTIPLYING SPACINGS SHOWN ON SCHEDULE BY THE FOLLOWING FACTORS.

ACTUAL E. D.	FACTOR	
	TAPCON/ZAMAC NAILIN/ PANELMATES	RAWL CALK-IN
3"	.86	.75
2 1/2"	.71	.50
2"	.50	–

PRODUCT RENEWED

ACCEPTANCE No. 00-0809.01

EXPIRATION DATE 10/30/2003

By Helmy A. Maher

PRODUCT CONTROL DIVISION
BUILDING CODE COMPLIANCE OFFICE

APPROVED AS COMPLYING WITH THE SOUTH FLORIDA BUILDING CODE

DATE OCTOBER 30 1997

BY Helmy A. Maher

PRODUCT CONTROL DIVISION
BUILDING CODE COMPLIANCE OFFICE

ACCEPTANCE NO. 96-0913.01

DADE COUNTY

Walter A. Tillit
10/2/97

TILLECO INC.
TILLIT TESTING & ENGINEERING COMPANY
6595 N.W. 36th. St. Ste. 217, VIRGINIA GARDENS, FL 33166
Phone : (305)871-1530 Fax : (305)871-1531

WALTER A. TILLIT Jr. P. E.
FLORIDA Lic. # 44167

EXTRUDED BERTHA STORM PANEL

EASTERN METAL SUPPLY, INC
3600 23rd. Ave. SOUTH
LAKE WORTH, FL 33461-3247

REV. NO	DESCRIPTION	DATE	REV. No	DESCRIPTION	DATE
1	GENERAL	5/18/97	3		
2	GENERAL	10/2/97	4		

AS SHOWN
SCALE

5/14/96
DATE

96 - 144
DRAWING No

SHEET 6 OF 8

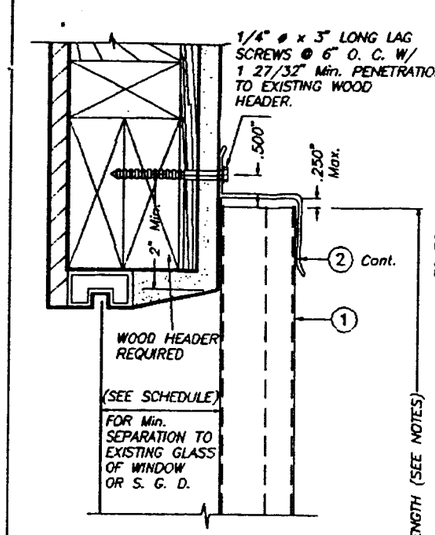

ALTERNATIVE 1

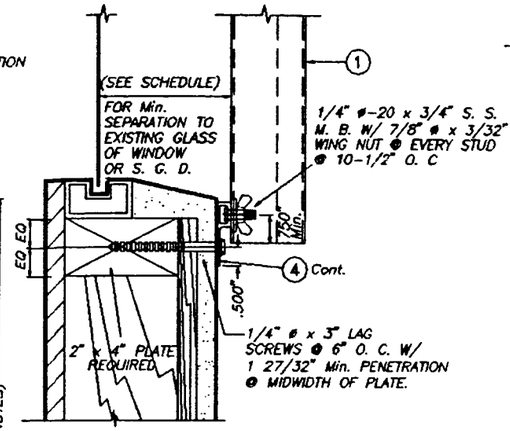

ALTERNATIVE 2A

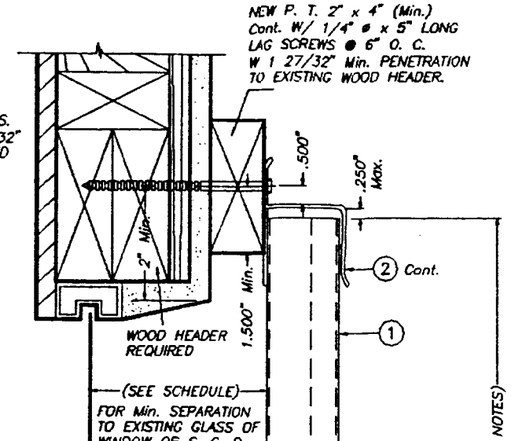

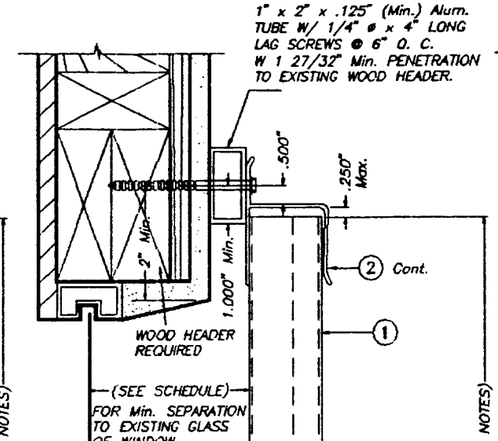

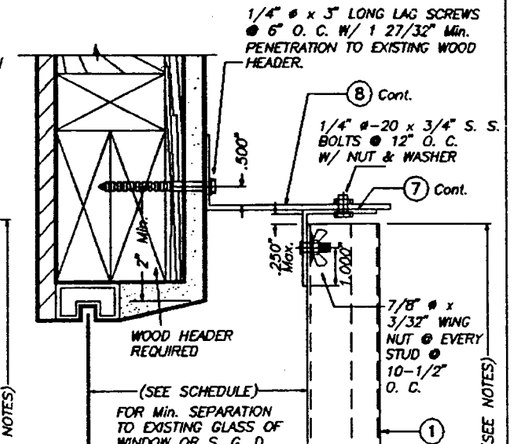

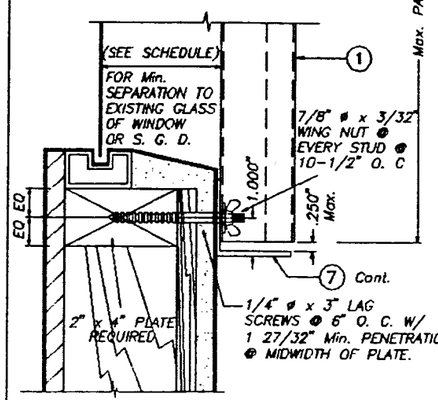

ALTERNATIVE 2

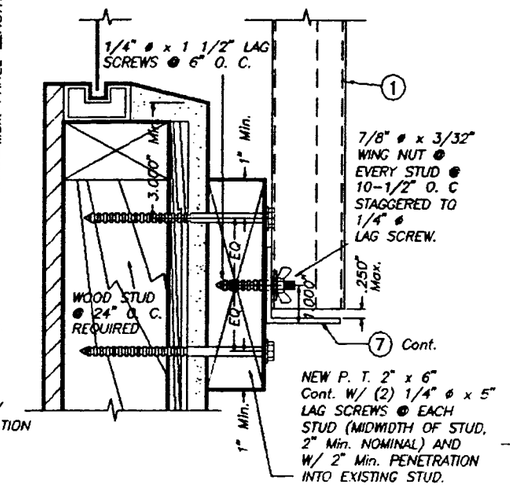

ALTERNATIVE 3

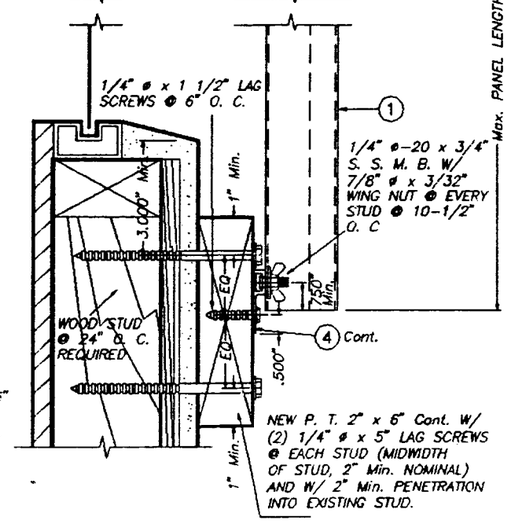

ALTERNATIVE 5

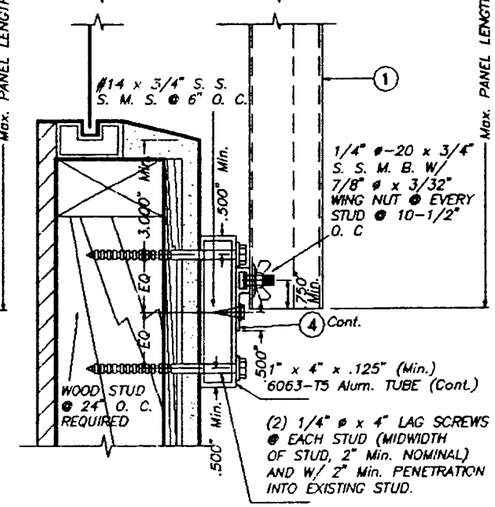

ALTERNATIVE 6

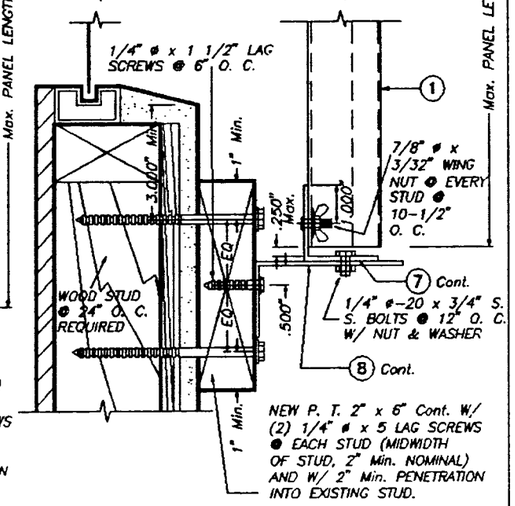

ALTERNATIVE 7

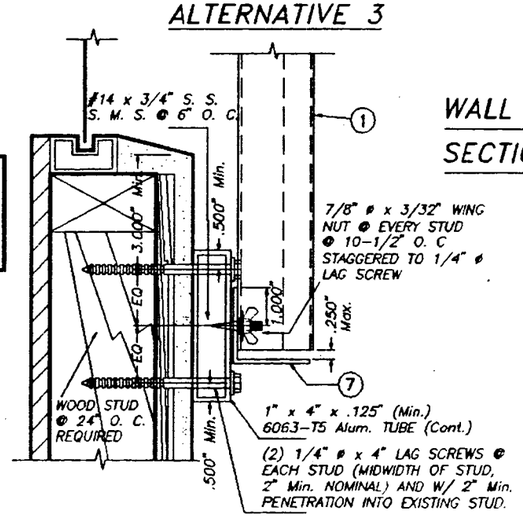

ALTERNATIVE 4

WALL MOUNTING INSTALLATIONS – SECTIONS A

SCALE : 1/4" = 1"

NOTE FOR COMBINATION OF SECTIONS:

WALL MOUNTING SECTIONS CAN BE COMBINED IN ANY WAY TO SUIT ANY INSTALLATION.

NOTES:

1. INSTALLATIONS ARE ONLY VALID FOR DESIGN WIND LOADS UP TO +60.0, -72.0 psf AND PANEL'S LENGTH UP TO 9'-0".
2. NEW 2" x 6" P. T. TO BE SOUTHERN PINE No. 2, SURFACED DRY WITH 19 % M. M. C. W/ SPECIFIC DENSITY OF 0.55.
3. FOR NEW WOOD FRAME CONSTRUCTION: WOOD MEMBERS TO BE SOUTHERN PINE No. 2, W/ SPECIFIC DENSITY OF 0.55 OR EQUAL.

APPROVED AS COMPLYING WITH THE SOUTH FLORIDA BUILDING CODE
DATE October 30 1997
BY Helmy A. Mahr
PRODUCT CONTROL DIVISION
BUILDING CODE COMPLIANCE OFFICE
ACCEPTANCE NO. 96-0913.01

PRODUCT RENEWED
ACCEPTANCE No. 00-0809.01
EXPIRATION DATE 10/30/2003
By Helmy A. Mahr
PRODUCT CONTROL DIVISION
BUILDING CODE COMPLIANCE OFFICE

INSTALLATION DETAILS ON EXISTING WOOD BUILDINGS

Walter A. Tillit
10/2/97

DADE COUNTY

TILTECO INC.
TILLIT TESTING & ENGINEERING COMPANY
6595 N.W. 36th. St. Ste. 217, VIRGINIA GARDENS, FL 33166
Phone : (305)871-1530 Fax : (305)871-1531
WALTER A. TILLIT Jr. P. E.
FLORIDA Lic. # 44167

EXTRUDED BERTHA STORM PANEL

EASTERN METAL SUPPLY, INC.
3600 23rd. Ave. SOUTH
LAKE WORTH, FL 33461-3247

REV. NO	DESCRIPTION	DATE	REV. No	DESCRIPTION	DATE
1	GENERAL	5/16/97	3		
2	GENERAL	10/2/97	4		

AS SHOWN SCALE
5/14/96 DATE
96 – 144 DRAWING No
SHEET 7 OF 8

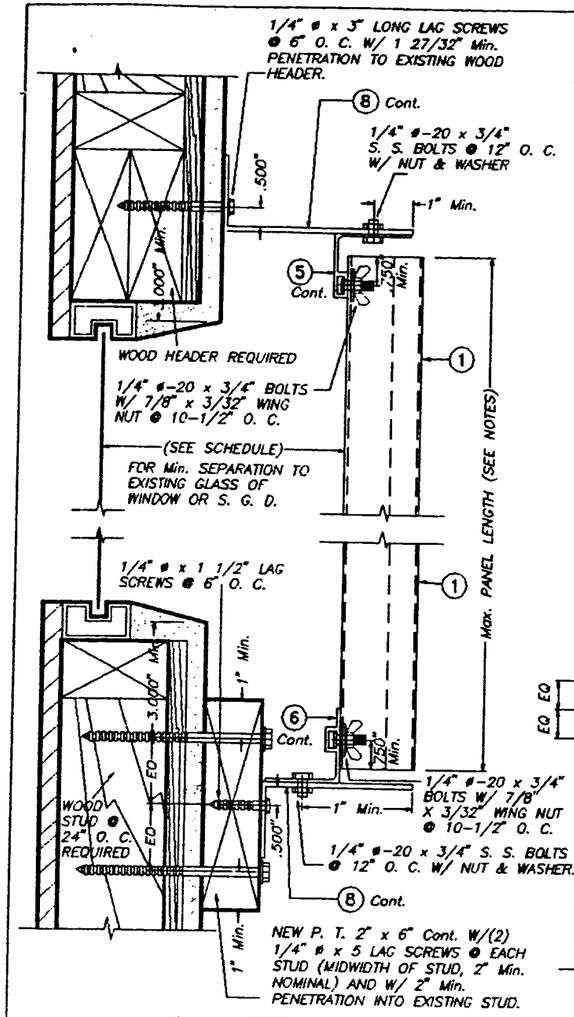

ALTERNATIVE 8

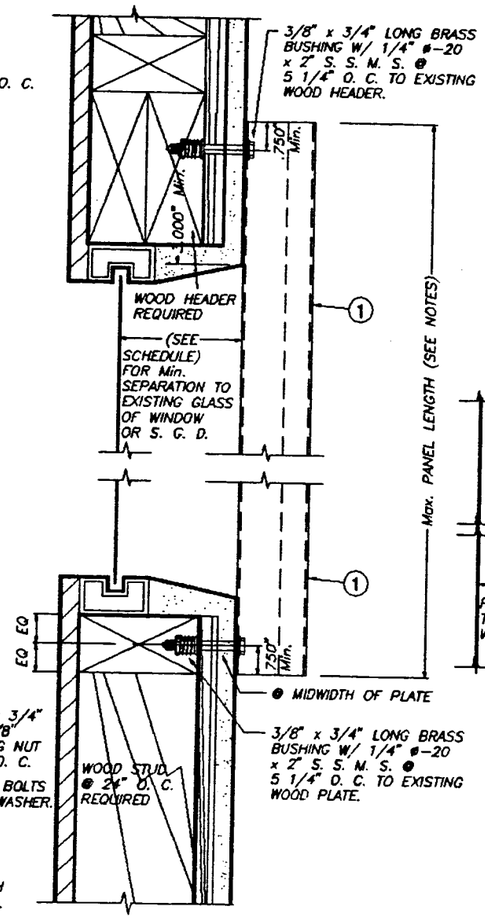

ALTERNATIVE 9

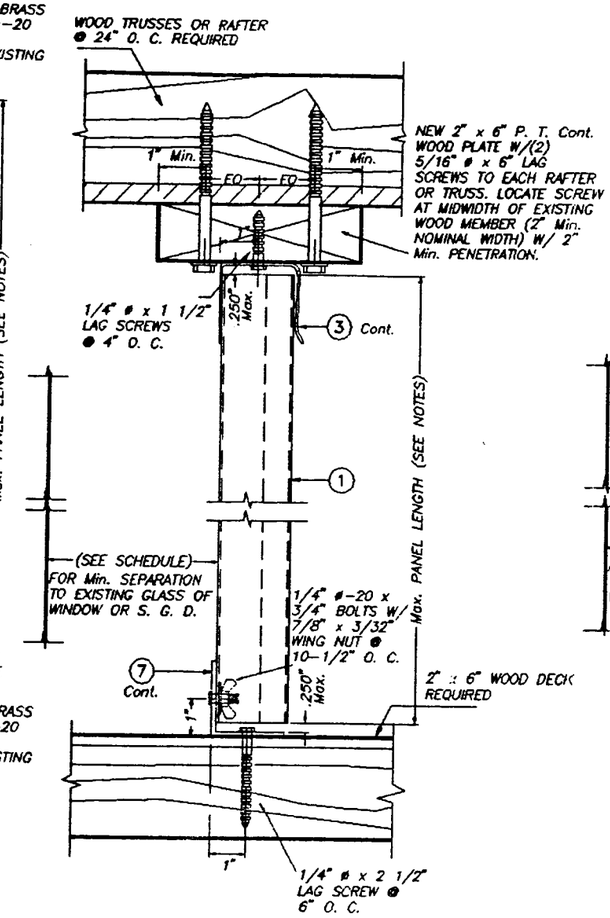

ALTERNATIVE 1

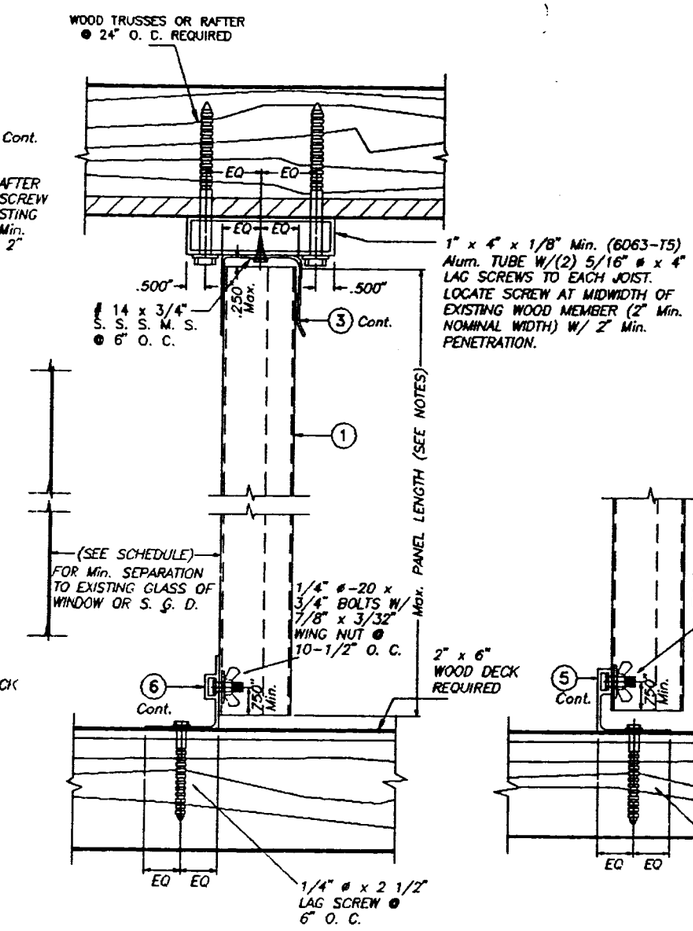

ALTERNATIVE 2

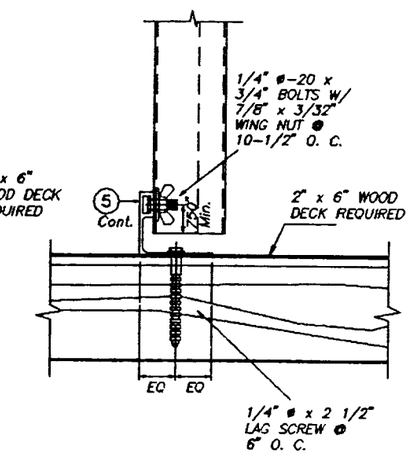

ALTERNATIVE 3

WALL MOUNTING INSTALLATIONS – SECTIONS A

SCALE : 1/4" = 1"

CEILING & FLOOR MOUNTING INSTALLATIONS – SECTIONS B

SCALE : 1/4" = 1"

NOTE FOR COMBINATION OF SECTIONS:

FLOOR/ WALL/ CEILING MOUNTING SECTIONS CAN BE COMBINED IN ANY WAY TO SUIT ANY INSTALLATION.

INSTALLATION DETAILS ON EXISTING WOOD BUILDINGS

PRODUCT RENEWED

ACCEPTANCE No. 00-0809.01

EXPIRATION DATE 10/30/2003

By Helmy A. Moker

PRODUCT CONTROL DIVISION
BUILDING CODE COMPLIANCE OFFICE

APPROVED AS COMPLYING WITH THE SOUTH FLORIDA BUILDING CODE

DATE OCTOBER 30, 19 97

BY Helmy A. Moker

PRODUCT CONTROL DIVISION
BUILDING CODE COMPLIANCE OFFICE

ACCEPTANCE NO. 96-0913.01

DADE COUNTY

NOTES:

1. INSTALLATIONS ARE ONLY VALID FOR DESIGN WIND LOADS UP TO +60.0, −72.0 psf AND PANEL'S LENGTH UP TO 9'−0".
2. NEW 2" x 6" P. T. TO BE SOUTHERN PINE No. 2, SURFACED DRY WITH 19 % M. M. C. W/ SPECIFIC DENSITY OF 0.55.
3. FOR NEW WOOD FRAME CONSTRUCTION: WOOD MEMBERS TO BE SOUTHERN PINE No. 2, W/ SPECIFIC DENSITY OF 0.55 OR EQUAL

Walter A. Tillit
10/2/97

TILLECO INC.
TILLIT TESTING & ENGINEERING COMPANY
6595 N.W. 36th. St. Ste. 217, VIRGINIA GARDENS, FL 33166
Phone : (305)871-1530 Fax : (305)871-1531
WALTER A. TILLIT Jr. P. E.
FLORIDA Lic. # 44167

EXTRUDED BERTHA STORM PANEL

EASTERN METAL SUPPLY, INC.
3600 23rd. Ave. SOUTH
LAKE WORTH, FL 33461-3247

REV. NO	DESCRIPTION	DATE	REV. No	DESCRIPTION	DATE
1	GENERAL	5/18/97	3		
2	GENERAL	10/2/97	4		

AS SHOWN SCALE

5/14/96 DATE

96 – 144 DRAWING No

SHEET 8 OF 8