MIAMI-DADE COUNTY, FLORIDA
METRO-DADE FLAGLER BUILDING

BUILDING CODE COMPLIANCE OFFICE
METRO-DADE FLAGLER BUILDING
140 WEST FLAGLER STREET, SUITE 1603
MIAMI, FLORIDA 33130-1563
(305) 375-2901 FAX (305) 375-2908

CONTRACTOR LICENSING SECTION
(305) 375-2527 FAX (305) 375-2558

CONTRACTOR ENFORCEMENT DIVISION
(305) 375-2966 FAX (305) 375-2908

PRODUCT CONTROL DIVISION
(305) 375-2902 FAX (305) 372-6339

PRODUCT CONTROL NOTICE OF ACCEPTANCE

Rollingshield, Inc.
8900 N. W. 119th Street
Hialeah ,FL 33018

Your application for Notice of Acceptance (NOA) of:
40 mm Slat Roll-Up Shutter
under Chapter 8 of the Code of Miami-Dade County governing the use of Alternate Materials and Types of Construction, and completely described herein, has been recommended for acceptance by the Miami-Dade County Building Code Compliance Office (BCCO) under the conditions specified herein.

This NOA shall not be valid after the expiration date stated below. BCCO reserves the right to secure this product or material at any time from a jobsite or manufacturer's plant for quality control testing. If this product or material fails to perform in the approved manner, BCCO may revoke, modify, or suspend the use of such product or material immediately. BCCO reserves the right to revoke this approval, if it is determined by BCCO that this product or material fails to meet the requirements of the South Florida Building Code.

The expense of such testing will be incurred by the manufacturer.

ACCEPTANCE NO.: 00-0822.02
EXPIRES: 06/07/2004

Raul Rodriguez
Chief Product Control Division

THIS IS THE COVERSHEET, SEE ADDITIONAL PAGES FOR SPECIFIC AND GENERAL CONDITIONS
BUILDING CODE & PRODUCT REVIEW COMMITTEE

This application for Product Approval has been reviewed by the BCCO and approved by the Building Code and Product Review Committee to be used in Miami-Dade County, Florida under the conditions set forth above.

Francisco J. Quintana, R.A.
Director
Miami-Dade County
Building Code Compliance Office

APPROVED: 06/07/2001

Rollingshield, Inc.

ACCEPTANCE NO: 00-0822.02

APPROVED: JUN 0 7 2001

EXPIRES: JUN 0 7 2004

NOTICE OF ACCEPTANCE: SPECIFIC CONDITIONS

1 SCOPE:

1.1 This approves an extruded aluminum roll-up type shutter, as described in Section 2 of this Notice of Acceptance. It is designed to comply with the South Florida Building Code, (S.F.B.C.) 1994 Edition for Miami-Dade County, for the locations where the pressure requirements, as determined by S.F.B.C. Chapter 23, do not exceed the design pressure rating values indicated in the approved drawings.

2 PRODUCT DESCRIPTION:

2.1 The **40mm Slat Roll-Up Shutter** and its components shall be constructed in strict compliance with the following documents: Drawing No. **00-11**, Sheets 1 through 16 including 3A, 5A & 14A of 16. It is titled "40mm Slat Roll-Up Shutter ", prepared by Tilteco, Inc, dated 01/14/00, with latest revision on 04/25/01, signed and sealed by W. A. Tillit Jr. PE., bearing the Miami-Dade County Product Control approval stamp with the Notice of Acceptance number and approval date. These documents shall herein after be referred to as the approved drawings.

3 LIMITATIONS:

3.1 Minimum slat engagement shall be 1.25".

3.2 Minimum separation from interior of slat to glass being protected shall be as shown sheet 12 of 16.

3.3 The operating mechanism, not part of this approval shall be certified by a recognized testing agency.

3.4 All permanent set components, included but not limited to embedded anchor bolts, threaded cones, metal shields, headers and sills, must be protected against corrosion, contamination and damage at all times.

4 INSTALLATION:

4.1 The extruded aluminum Roll-Up Shutter and its component shall be installed in strict compliance with the approved drawing

5 LABELING:

5.1 Each unit shall bear a permanent label with the manufacturer's name or logo, city, state and the following statement: "Miami-Dade County Product Control Approved"

6 BUILDING PERMIT REQUIREMENTS:

6.1 Application for Building Permit shall be accompanied by copies of the following:

6.1.1 This Notice of Acceptance

6.1.2 Duplicate copies of the approved drawings, as identified in Section 2 of this Notice of Acceptance, clearly marked to show the components selected for the proposed installation.

6.1.3 Any other document required by the Building Official or the South Florida Building Code in order to evaluate the installation of this system.

Candido Font PE. Senior Product Control Examiner
Product Control Division

Rollingshield, Inc.

ACCEPTANCE NO: 00-0822.02

APPROVED: JUN 07 2001

EXPIRES: JUN 07 2004

NOTICE OF ACCEPTANCE: STANDARD CONDITIONS

1 Renewal of this Acceptance (approval) shall be considered after a renewal application has been filed and the original submitted documents, including test-supporting data, engineering documents, are no older than eight (8) years.

2. Any and all approved products shall be permanently labeled with the manufacturer's name, city, state, and the following statement: "Miami-Dade County Product Control Approval", or as specifically stated in the specific conditions of this Acceptance.

3. Renewals of Acceptance will not be considered if:
   a. There has been a change in the South Florida Building Code affecting the evaluation of this product and the product is not in compliance with the code changes.
   b. The product is no longer the same product (identical) as the one originally approved.
   c. If the Acceptance holder has not complied with all the requirements of this acceptance, including the correct installation of the product.
   d. The engineer who originally prepared, signed and sealed the required documentation initially submitted, is no longer practicing the engineering profession.

4. Any revision or change in the materials, use, and/or manufacture of the product or process shall automatically be cause for termination of this Acceptance, unless prior written approval has been requested (through the filing of a revision application with appropriate fee) and granted by this office.

5. Any of the following shall also be grounds for removal of this Acceptance:
   a. Unsatisfactory performance of this product or process.
   b. Misuse of this Acceptance as an endorsement of any product, for sales, advertising or any other purposes.

6. The Notice of Acceptance number preceded by the words Miami-Dade County, Florida, and followed by the expiration date may be displayed in advertising literature. If any portion of the Notice of Acceptance is displayed, then it shall be done in its entirety.

7. A copy of this Acceptance as well as approved drawings and other documents, where it applies, shall be provided to the user by the manufacturer or its distributors and shall be available for inspection at the job site at all time. The engineer need not reseal the copies.

8. Failure to comply with any section of this Acceptance shall be cause for termination and removal of Acceptance.

9. This Notice of Acceptance consists of pages 1, 2 and this last page 3.

Candido Font PE. Senior Product Control Examiner
Product Control Division

END OF THIS ACCEPTANCE

Rollingshield, Inc.

ACCEPTANCE NO: 00-0822.02

APPROVED: JUN 07 2001

EXPIRES: JUN 07 2004

NOTICE OF ACCEPTANCE: EVIDENCE SUBMITTED:

A. DRAWING

1. Drawing No. 00-11, "40mm Slat Roll-Up Shutter", Sheets 1 through 16 including 3A, 5A & 14 A of 16, prepared by Tilteco, Inc., dated 01/14/00, with last revision on 04/25/01, signed and sealed by W. A. Tillit Jr. PE.

B. TEST

1. Test report on Uniform Static Air Pressure Test per PA 202, Large Missile Impact Test per PA 201 & Cyclic Wind Pressure Test per PA 203 of Series CD40, Aluminum Roll Up Shutters, prepared by Fenestration Testing Laboratory, Inc., Report No. 2485 dated 01/12/2000, signed and sealed by A. P. Gonzalez, PE.
2. Test report on Large Missile Impact Test per PA 201, of Aluminum Storm Bar, prepared by Fenestration Testing Laboratory, Inc., Report No. 2642, dated 07/25/2000, signed and sealed by A. P. Gonzalez, PE.
3. Test report on Simple Loading Test, of Aluminum Storm Bar, prepared by Fenestration Testing Laboratory, Inc., Report No 3013, dated 03/13/2001, signed and sealed by A. Acevedo, PE.
4. Test report on Impact Test per ASTM D 256, Flexural Test per ASTM D790 & Tensile Test per ASTM D638 of plastic sample, Report No. CTL 0410G, dated 04/04&09/2001, signed and sealed by R. Patel PE.

C. CALCULATIONS

1. Comparative analysis for slats; storm bars, headers, tracks, mullions and anchors, using rational analysis dated 01/18/00, pages 1 through 18 of 18, prepared by Tilteco, Inc., signed and sealed by W. A. Tillit, PE, on 07/25/00.
2. Comparative analysis of Storm Bars w/Spring Loaded System using rational analysis pages 1 through 12 of 12, prepared by Tilteco, Inc, signed and sealed by W. A. Tillit, PE on 05/03/01

D. MATERIAL CERTIFICATION

N/A

E. STATEMENTS.

1. Letter of Compliance issued by Tilteco, Inc. on 08/17/2000, signed by W. A. Tillit, PE.
2. Letter of No financial Interest issued by Tilteco, Inc. on 08/14/1000, signed by W. A. Tillit, PE.
3. Letter of Test Compliance issued by Fenestration Testing Laboratory, Inc., on 07/25/00, signed and sealed by A. P. Gonzalez, PE.
4. Letter of Test Clarification issued by Fenestration Testing Laboratory, Inc. on 04/10/2001, signed by R. Zavala and signed and sealed by A. P. Gonzalez, PE.

Candido F. Font, PE, Senior Product Control Examiner
Product Control Division

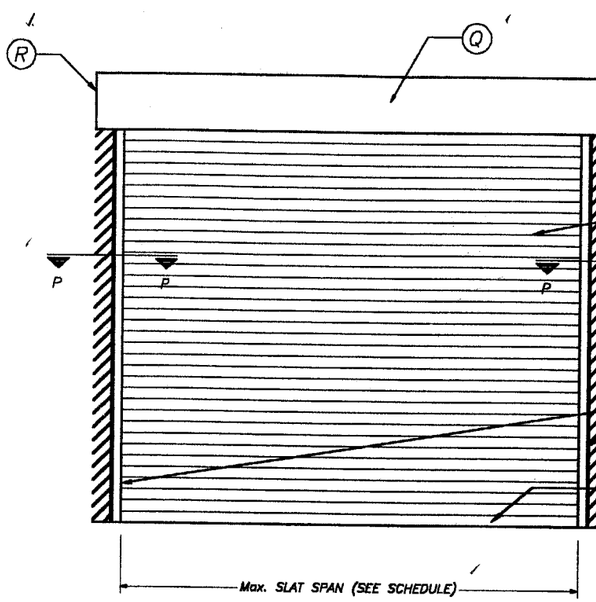

TYPICAL SINGLE UNIT ELEVATION (NO STORM BARS REQUIRED)

NOTE: SEE SHEET 2 & 3 OF 16 FOR COMPONENTS NOMENCLATURE.

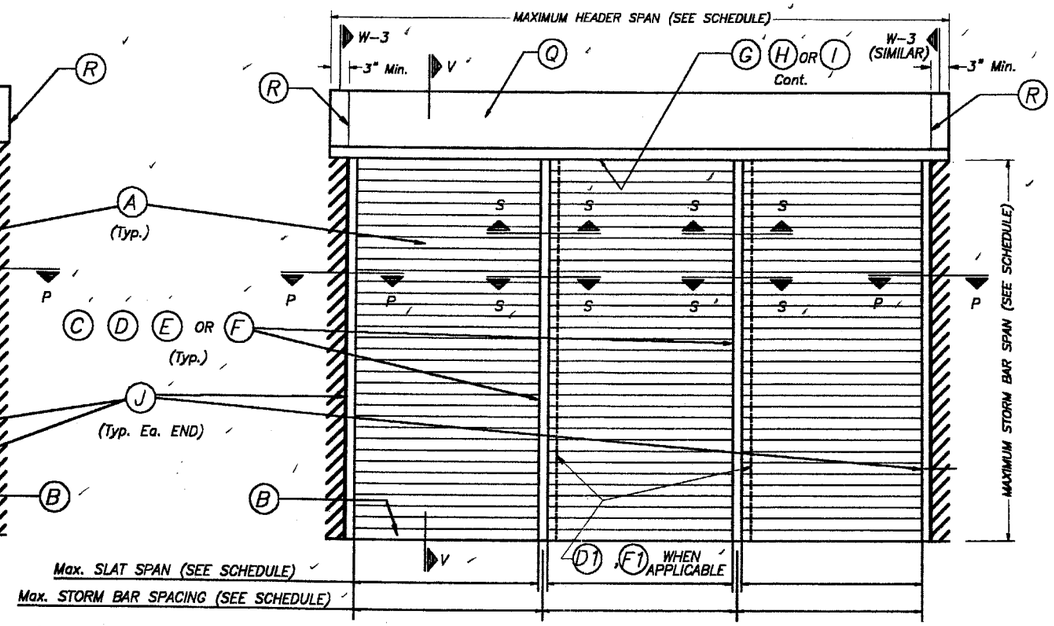

TYPICAL MULTIPLE UNIT ELEVATION (STORM BARS REQUIRED)

NOTE: SEE SHEET 2 & 3 OF 16 FOR COMPONENTS NOMENCLATURE.

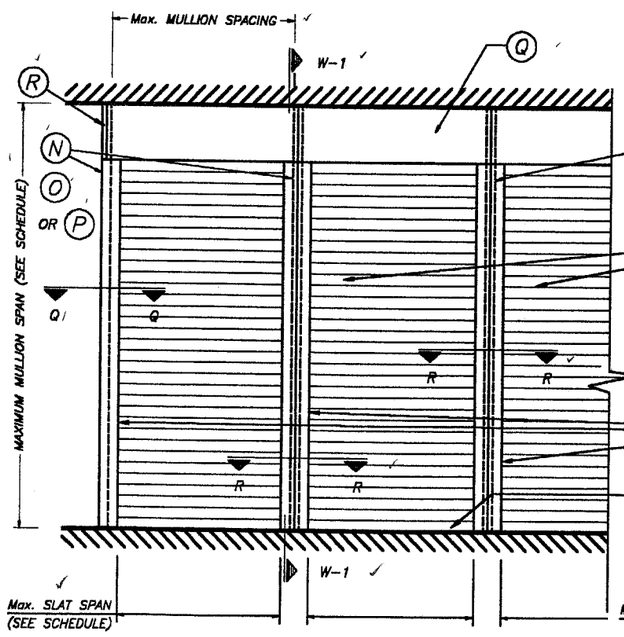

TYPICAL CONSECUTIVE SINGLE UNIT ELEVATION (NO STORM BARS REQUIRED)

NOTE: SEE SHEET 2 & 3 OF 16 FOR COMPONENTS NOMENCLATURE.

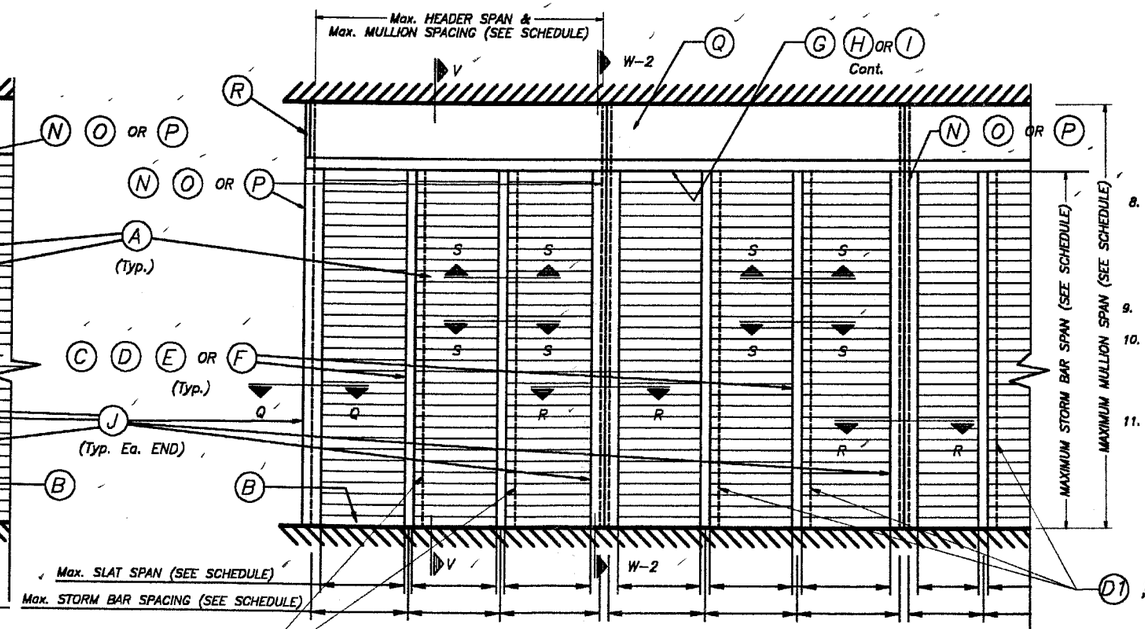

TYPICAL CONSECUTIVE MULTIPLE UNIT ELEVATION (STORM BARS REQUIRED)

NOTE: SEE SHEET 2 & 3 OF 16 FOR COMPONENTS NOMENCLATURE.

NOTE:
SEE SECTIONS ON
SHEETS 4 THRU 10.

GENERAL NOTES:

1. ROLL-UP SHUTTER HAS BEEN DESIGNED IN ACCORDANCE WITH THE 1994 MIAMI-DADE COUNTY EDITION OF THE SOUTH FLORIDA BUILDING CODE.
   DESIGN WIND LOADS SHALL BE AS PER SECTION 6 OF ASCE 7-88, WITH 110 m.p.h. BASIC WIND SPEED.
   ROLL-UP SHUTTER'S ADEQUACY FOR IMPACT AND FATIGUE RESISTANCE HAS BEEN VERIFIED IN ACCORDANCE WITH SECTIONS 2315 & 2314 RESPECTIVELY OF THE ABOVE MENTIONED CODE, AS PER FENESTRATION TESTING LAB. REPORTS #2485, 2637, 2640, 2641, 2642, 2736, 2737 & 3013.
2. ALL ALUMINUM EXTRUSIONS SHALL BE 6063-T6 ALLOY (UNLESS OTHERWISE NOTED).
3. ALL SCREWS TO BE STAINLESS STEEL 304 OR 316 SERIES W/50 ksi YIELD POINT AND 90 ksi TENSILE STRENGTH.
4. BOLTS TO BE 2024-T4 ALUMINUM ALLOY, GALVANIZED OR STAINLESS STEEL WITH 36 ksi MINIMUM YIELD POINT.
5. STORM BARS AT FLOOR OR CEILING MOUNTING INSTALLATIONS MAY BE REMOVABLE AT NON HURRICANE CONDITIONS. HOWEVER, EACH STORM BAR SHALL BEAR A PERMANENT LABEL IN A VISIBLE PLACE WITH A WARNING NOTE INSTRUCTING THE TENANT OR OWNER THAT STORM BARS MUST BE INSTALLED WITH CORRESPONDING HARDWARE DURING PERIODS OF HURRICANE WARNING AND THAT ROLL UP SHUTTERS WILL NOT OFFER HURRICANE PROTECTION UNLESS ALL STORM BARS ARE INSTALLED AS DIRECTED.
6. REMOVABLE STORM BARS SHALL BE STORED IN A CONSPICUOUS PLACE WITH EASY AND IMMEDIATE ACCESS SO THAT THEY CAN BE REACHED AND INSTALLED ANY TIME (HURRICANE CONDITIONS OR NOT) SLATS ARE ROLLED DOWN. THE EFFECT OF THE SLATS ROLLED DOWN WITHOUT STORM BARS IS; THOSE SLATS WILL SLIP OUT OF TRACK DUE TO THE DEFLECTION CAUSED BY WIND FORCES.
7. ANCHORS TO WALL FOR SIDE RAILS & BOX CONNECTION SHALL BE AS FOLLOWS: (UNLESS OTHERWISE NOTED)
   (A) TO EXISTING POURED CONCRETE:
   -1/4" ø TAPCON ANCHORS AS MANUFACTURED BY I.T.W./BUILDEX OR ELCO TEXTRON.
   NOTES:
   A.1) MINIMUM EMBEDMENT OF TAPCON ANCHORS INTO POURED CONCRETE SHALL BE 1 3/4". NO EMBEDMENT INTO STUCCO SHALL BE CONSIDERED AS PART OF THE REQUIRED EMBEDMENT.
   A.2) IN CASE THAT PRECAST STONE, PRECAST CONCRETE PANELS, OR PAVERS BE FOUND ON THE EXISTING WALL OR FLOOR, ANCHORS SHALL BE LONG ENOUGH TO REACH THE MAIN STRUCTURE BEHIND SUCH PANELS.
   (B) TO EXISTING CONCRETE BLOCK WALL:
   -1/4" ø TAPCON ANCHORS, AS MANUFACTURED BY I.T.W./BUILDEX OR ELCO TEXTRON.
   NOTES:
   B.1) MINIMUM EMBEDMENT OF TAPCON ANCHORS, INTO THE CONCRETE BLOCK UNIT SHALL BE 1 1/4".
   B.2) IN CASE THAT PRECAST STONE OR PRECAST CONCRETE PANELS BE FOUND ON THE EXISTING WALL, ANCHORS SHALL BE LONG ENOUGH TO REACH THE MAIN STRUCTURE BEHIND SUCH PANELS.
   (C) ANCHORS SHALL BE INSTALLED FOLLOWING ALL OF THE RECOMENDATIONS AND SPECIFICATIONS OF THE ANCHOR'S MANUFACTURER.
   (D) ANCHORS REQUIRED FOR STORM BARS, HEADERS & MULLION COONECTIONS SHALL BE AS SPECIFIED ON APPLICABLE SECTIONS SHOWN ON SHEETS 5, 6, 7, 8 & 10 OF 16 RESPECTIVELY.
   POWER BOLTS & CALK-IN ANCHORS TO BE AS MANUFACTURED BY POWERS RAWL FASTENING, INC.
   MINIMUM EDGE DISTANCE AND SPACING FOR ABOVE MENTIONED ANCHORS SHALL BE AS INDICATED BELOW OR AT ABOVE MENTIONED SHEETS, WHICHEVER IS LARGER (MORE CRITICAL).

ANCHOR	SPACING	EDGE DISTANCE
3/8"ø POWER BOLT	3 3/4"	4 1/2"
1/4"ø CALK-IN	2 1/2"	3"
1/4"ø TAPCON	3"	2 1/2"

8. POLYETHYLENE BLOCKS USED AT SPRING LOADED SYSTEM FOR REMOVABLE STORM BARS SHALL COMPLY W/THE FOLLOWING SPECIFICATIONS:

ASTM DESIGNATION	PROPERTIES	VALUE
D256	IMPACT RESISTANCE	7.95 FT-Lb/In (AVERAGE)
D638	TENSILE CAPACITY	4243 psi (AVERAGE)
D790	FLEXURAL CAPACITY	1012 psi (AVERAGE)

9. IT SHALL BE THE RESPONSIBILITY OF THE CONTRACTOR TO VERIFY THE SOUNDNESS OF THE STRUCTURE WHERE SHUTTER IS TO BE ATTACHED TO INSURE PROPER ANCHORAGE.
10. SHUTTER MANUFACTURER'S STAMP SHALL BE PLACED ON THE EXPOSED SURFACE OF THE SIDE RAIL APPROXIMATELY 4" ABOVE THE BOTTOM OF SUCH RAIL.
    STAMP SHALL READ AS FOLLOWS:
    ROLLINGSHIELD
    MIAMI, FL
    MIAMI-DADE COUNTY PRODUCT CONTROL APPROVED.
11. ROLL-UP MECHANISM NOT PART OF THIS APPROVAL.

APPROVED AS COMPLYING WITH THE
SOUTH FLORIDA BUILDING CODE
DATE JUN 07 2001
BY
PRODUCT CONTROL DIVISION
BUILDING CODE COMPLIANCE OFFICE
ACCEPTANCE NO. 00-0822.02

MIAMI-DADE COUNTY

5/2/01

TILTECO INC.
TILLIT TESTING & ENGINEERING COMPANY
6595 N.W. 36th. St., Ste. 217 - VIRGINIA GARDENS, FL 33166
Phone : (305)871-1530 . Fax : (305)871-1531
EB-0006719
WALTER A. TILLIT Jr., P. E.
FLORIDA Lic. # 44167

40mm SLAT ROLL-UP SHUTTER

ROLLINGSHIELD, INC.
8900 N.W. 119 STREET
HIALEAH, FLORIDA 33018

REV. No	DESCRIPTION	DATE	REV. No	DESCRIPTION	DATE
1	GENERAL	4/25/01	3		
2	-	-	4		

AS SHOWN
SCALE

1/14/00
DATE

00-11
DRAWING No

SHEET 1 OF 16

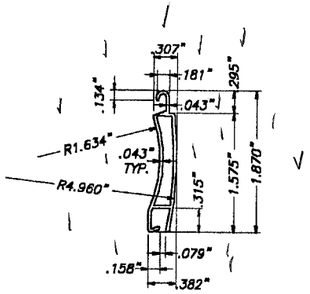

(A) TYPE 1 SLAT:
EXTRUDED ALUMINUM SLAT
6063-T6 ALUMINUM ALLOY
SCALE: 1/2" = 1"

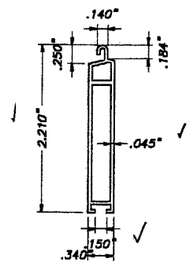

(B) TYPE 2 SLAT:
EXTRUDED ALUMINUM BOTTOM SLAT
6063-T6 ALUMINUM ALLOY
SCALE: 1/2" = 1"

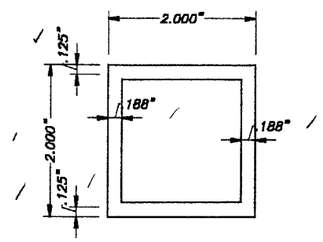

(C) TYPE 1 STORM BAR:
2" EXTRUDED STORM BAR
6063-T6 ALUMINUM ALLOY
SCALE: 1/2" = 1"

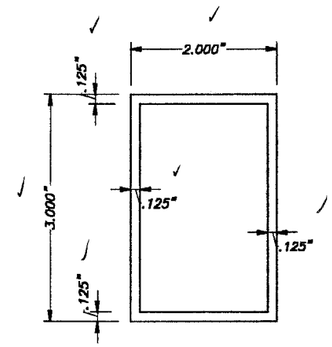

(D) TYPE 2 STORM BAR:
3" EXTRUDED STORM BAR
6063-T6 ALUMINUM ALLOY
SCALE: 1/2" = 1"

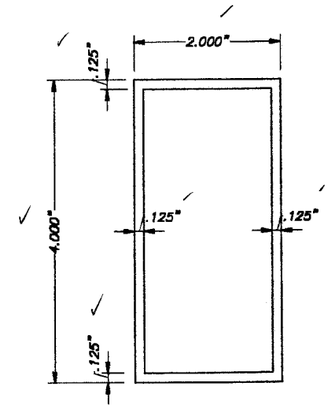

(E) TYPE 3 STORM BAR:
4" EXTRUDED STORM BAR
6063-T6 ALUMINUM ALLOY
SCALE: 1/2" = 1"

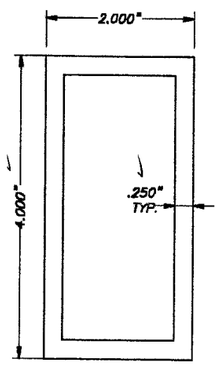

(F) TYPE 4 STORM BAR:
4" HEAVY EXTRUDED STORM BAR
6063-T6 ALUMINUM ALLOY
SCALE: 1/2" = 1"

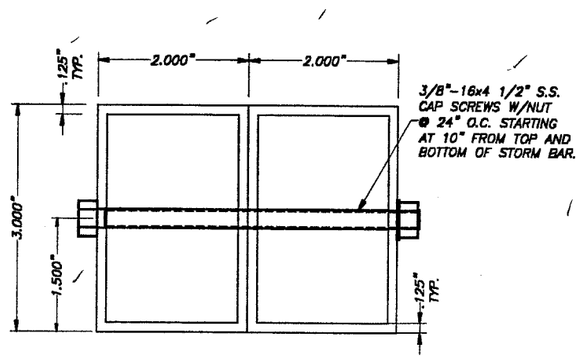

(D1) TYPE 5 STORM BAR:
EXTRUDED STORM BAR
6063-T6 ALUMINUM ALLOY
SCALE: 1/2" = 1"

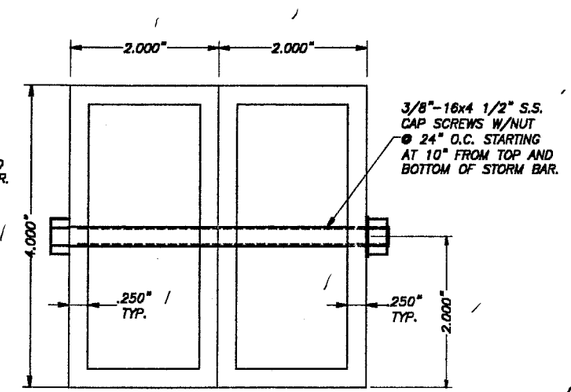

(F1) TYPE 6 STORM BAR:
4" HEAVY EXTRUDED STORM BAR
6063-T6 ALUMINUM ALLOY
SCALE: 1/2" = 1"

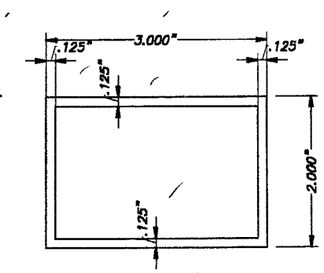

(G) HEADER TYPE 1:
6063-T6 ALUMINUM ALLOY
SCALE: 1/2" = 1"

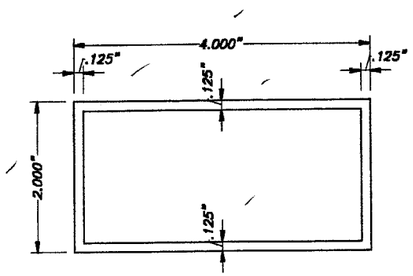

(H) HEADER TYPE 2:
6063-T6 ALUMINUM ALLOY
SCALE: 1/2" = 1"

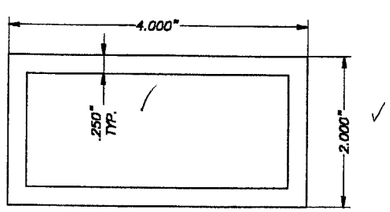

(I) HEADER TYPE 3:
6063-T6 ALUMINUM ALLOY
SCALE: 1/2" = 1"

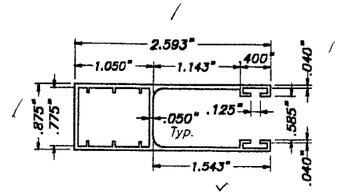

(J) TYPE 1 SIDE RAIL:
6063-T6 Alum. ALLOY
SCALE: 1/2" = 1"

APPROVED AS COMPLYING WITH THE SOUTH FLORIDA BUILDING CODE
DATE JUN 07 2001
BY
PRODUCT CONTROL DIVISION
BUILDING CODE COMPLIANCE OFFICE
ACCEPTANCE NO. 00-0822.02

MIAMI-DADE COUNTY

5/4/01

TILTECO INC.
TILLIT TESTING & ENGINEERING COMPANY
6395 N.W. 36th. St., Ste. 217 - VIRGINIA GARDENS, FL 33166
Phone : (305)871-1530 . Fax : (305)871-1531
EB-0006719
WALTER A. TILLIT Jr., P. E.
FLORIDA Lic. # 44167

40 mm SLAT ROLL-UP SHUTTER

ROLLINGSHIELD, INC.
8900 N.W. 119 STREET
HIALEAH, FLORIDA 33018

REV. No	DESCRIPTION	DATE	REV. No	DESCRIPTION	DATE
1	GENERAL	4/25/01	3		
2	--	--	4		

AS SHOWN SCALE
1/14/00 DATE
00-11 DRAWING No
SHEET 2 OF 16

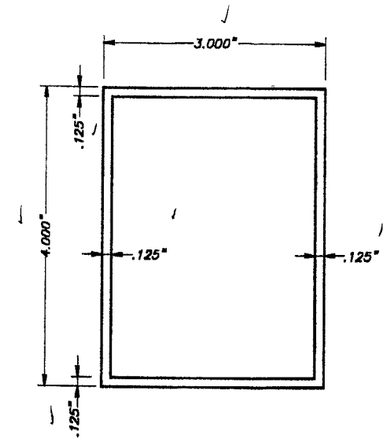

(N) TYPE 1 MULLION:
4" EXTRUDED MULLION
6063-T6 ALUMINUM ALLOY
SCALE: 1/2" = 1"

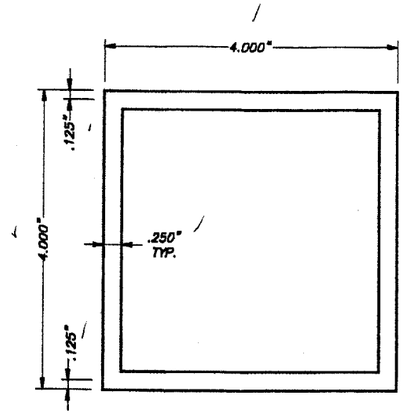

(O) TYPE 2 MULLION:
5" EXTRUDED MULLION
6063-T6 ALUMINUM ALLOY
SCALE: 1/2" = 1"

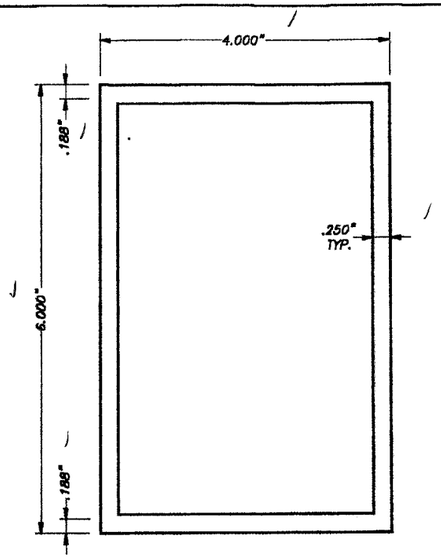

(P) TYPE 3 MULLION:
6" EXTRUDED MULLION
6063-T6 ALUMINUM ALLOY
SCALE: 1/2" = 1"

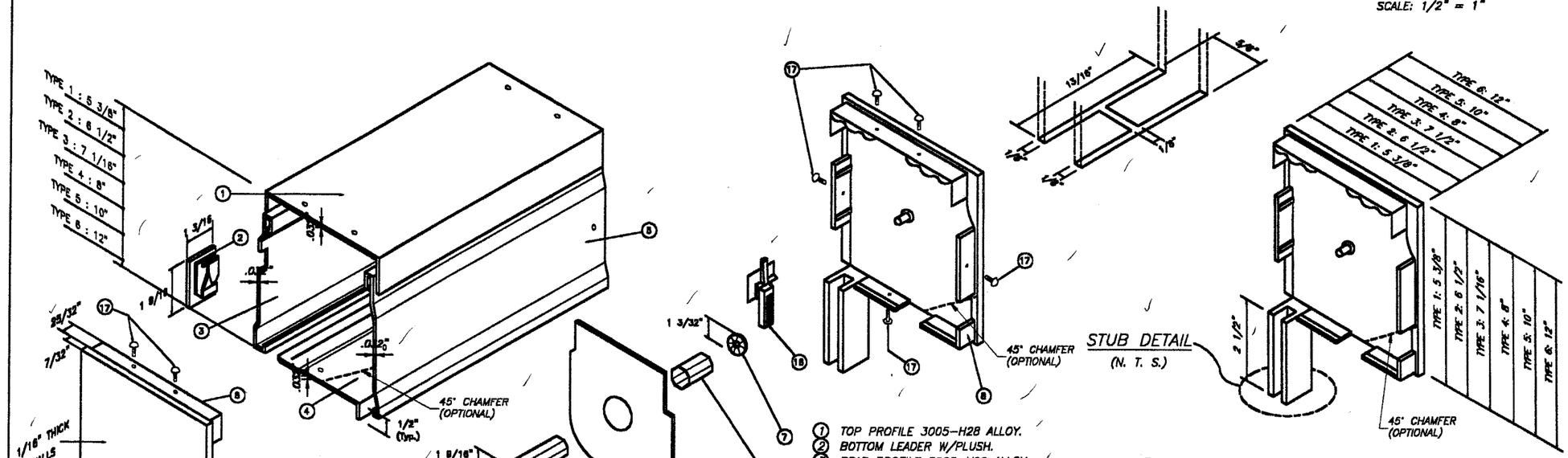

(Q) BOX COMPONENTS AND ASSEMBLY DETAIL
(SEE SHEET 3A OF 16 FOR ALTERNATE ROLL-UP SHUTTER LIFTING MECHANISMS)

(R) BOX SIDE BRACKET TYPES

1. TOP PROFILE 3005-H28 ALLOY.
2. BOTTOM LEADER W/PLUSH.
3. REAR PROFILE 3005-H28 ALLOY.
4. BOTTOM PROFILE 3005-H28 ALLOY.
5. COVER PROFILE 3005-H28 ALLOY.
6. NYLON DISK: 4 1/4" O. D.
7. ROLLING CUSHION W/BALLS.
8. BOX SIDE BRACKET: CAST ALUMINUM.
9. RIBBON: 17/32" WIDE.
10. SIDE RAIL.
11. SLAT.
12. EXTRUDED ALUMINUM DRAWING HOOP.
13. GALVANIZED STEEL DRUM: 1 9/16" O. D. x 0.032" Thk.
14. RETAINING METAL PLATE: 26 Ga. Galv. Stl. AT EACH END.
15. NYLON FERRULE: 1 17/32" O. D. x 0.045" Thk. x 3 5/16" Long.
16. NYLON FUNNEL.
17. SCREWS: # 4 x 1/2" S. S.

APPROVED AS COMPLYING WITH THE SOUTH FLORIDA BUILDING CODE
DATE JUN 07 2001
BY
PRODUCT CONTROL DIVISION
BUILDING CODE COMPLIANCE OFFICE
ACCEPTANCE NO. 00-0822.02

MIAMI-DADE COUNTY

TILTECO INC.
TILLIT TESTING & ENGINEERING COMPANY
6595 N.W. 36th. St., Ste. 217 – VIRGINIA GARDENS, FL. 33166
Phone : (305)871-1530 , Fax : (305)871-1531
EB-0006719
WALTER A. TILLIT Jr., P. E.
FLORIDA Lic. # 44167

40 mm SLAT ROLL-UP SHUTTER

ROLLINGSHIELD, INC.
8900 N.W. 119 STREET
HIALEAH, FLORIDA 33018

REV. No	DESCRIPTION	DATE	REV. No	DESCRIPTION	DATE
1	GENERAL	4/25/01	3		
2	–	–	4		

AS SHOWN SCALE
1/14/00 DATE
00-11 DRAWING No
SHEET 3 OF 16

TYPE DRIVE ROLL-UP SHUTTER SYSTEM

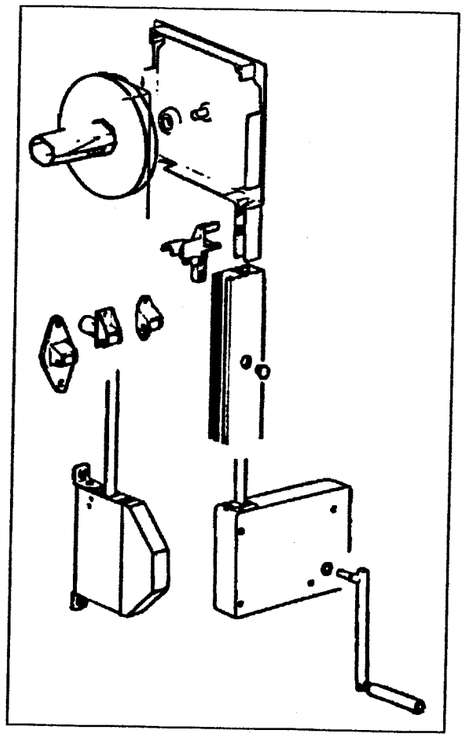

MOTORIZED ROLL-UP SHUTTER SYSTEM

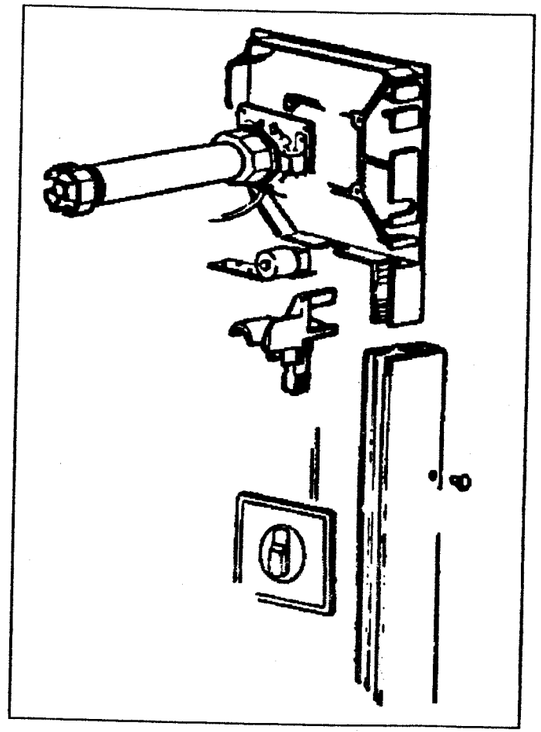

HAND CRANK ROLL-UP SHUTTER SYSTEM

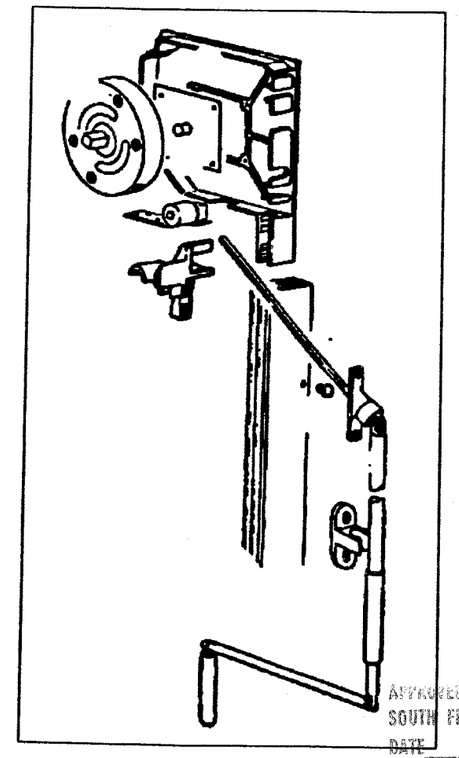

APPROVED AS COMPLYING WITH THE
SOUTH FLORIDA BUILDING CODE
DATE JUN 07 2001
BY
PRODUCT CONTROL DIVISION
BUILDING CODE COMPLIANCE OFFICE
ACCEPTANCE NO. 00-0822.02

ALTERNATE ROLL-UP SHUTTER LIFTING MECHANISMS

MIAMI-DADE COUNTY

9/01

TILTECO INC.
TILLIT TESTING & ENGINEERING COMPANY
6595 N.W. 36th. St., Ste. 217 – VIRGINIA GARDENS, FL 33166
Phone : (305)871-1530 . Fax : (305)871-1531
EB-0006719
WALTER A. TILLIT Jr., P. E.
FLORIDA Lic. # 44167

40mm SLAT ROLL-UP SHUTTER

ROLLINGSHIELD, INC.
8900 N.W. 119 STREET
HIALEAH, FLORIDA 33018

REV. No	DESCRIPTION	DATE	REV. No	DESCRIPTION	DATE
1	GENERAL	4/25/01	3		
2	–	–	4		

AS SHOWN
SCALE

1/14/00
DATE

00-11
DRAWING No

SHEET 3A OF 16

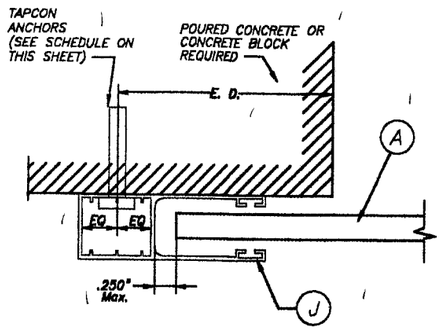

SECTION P – P (1) : WALL MOUNT

SCALE: 1/2" = 1"

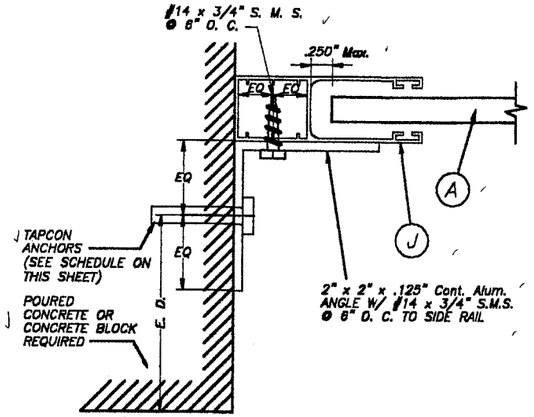

SECTION P – P (2) : INSIDE MOUNT

SCALE: 1/2" = 1"

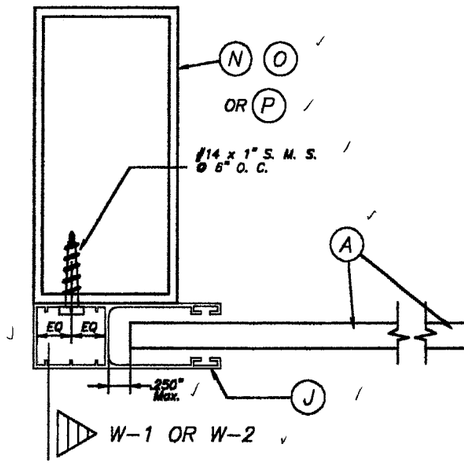

SECTION Q – Q : MULLION MOUNT (FACE MOUNT)

SCALE: 1/2" = 1"

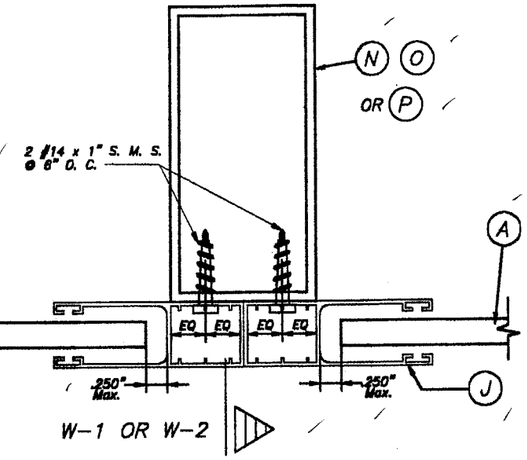

SECTION R – R : MULLION MOUNT (FACE MOUNT)

SCALE: 1/2" = 1"

SIDE RAIL ANCHOR SCHEDULE

MAXIMUM DESIGN PRESSURE RATING "W" (p. s. f.) AND CORRESPONDING MAXIMUM ANCHOR SPACING(in)* FOR SIDE RAILS (J) CONNECTION TO C. B. S.

(USE NEGATIVE PRESSURE VALUES AS PER ASCE 7-88)

MAXIMUM DESIGN LOAD "W" (p.s.f.)	SIDE RAIL (J)		
	WALL MOUNT	INSIDE MOUNT	BUILD-OUT MOUNT
80.0 OR LESS	6"	6"	6"
	6"	6"	6"
>80.0 TO 150.0	5"	5"	6"
	6"	6"	6"
>150.0 TO 160.0	5"	5"	6"
	6"	6"	6"

* MAXIMUM ANCHOR SPACING (in.) AT SIDE RAILS VERSUS EDGE DISTANCE = E. D.

+ MAXIMUM ANCHOR SPACING ARE VALID FOR 3 1/2" EDGE DISTANCE. FOR E. D. LESS THAN 3 1/2", REDUCE ANCHOR SPACING BY MULTIPLYING SPACING SHOWN ON SCHEDULE BY THE FOLLOWING FACTORS (REDUCED SPACING OBTAINED USING FACTORS SHALL NOT BE LESS THAN 3"):

ACTUAL E. D.	FACTOR
3"	.86
2 1/2"	.75
2"	.50

MASONRY
POURED CONCRETE

SUBSTRATE LEGEND

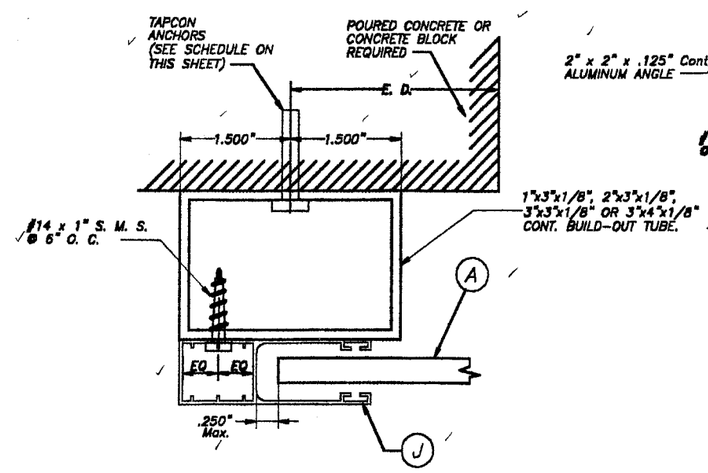

SECTION P – P (3) : BUILD-OUT MOUNT

SCALE: 1/2" = 1"

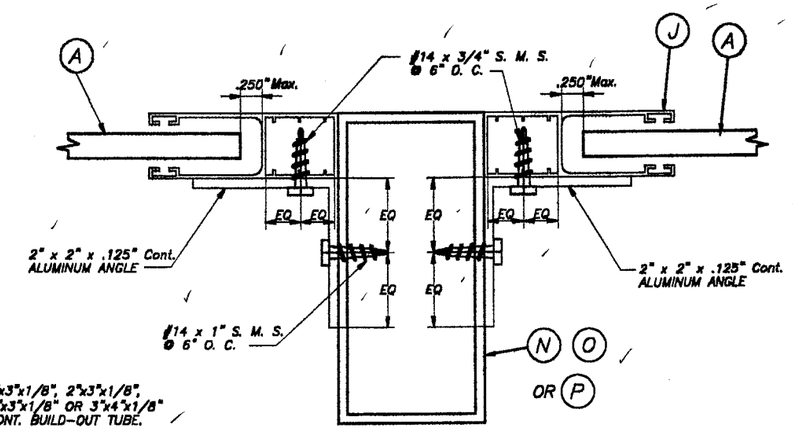

SECTION R – R : MULLION MOUNT (INSIDE MOUNT)

SCALE: 1/2" = 1"

APPROVED AS COMPLYING WITH THE SOUTH FLORIDA BUILDING CODE
DATE JUN 07 2001
BY
PRODUCT CONTROL DIVISION
BUILDING CODE COMPLIANCE OFFICE
ACCEPTANCE NO. 00-0822.02

MIAMI-DADE COUNTY

5/2/01

TILTECO INC.
TILLIT TESTING & ENGINEERING COMPANY
6595 N.W. 36th. St., Ste. 217 – VIRGINIA GARDENS, FL 33166
Phone : (305)871-1530 , Fax : (305)871-1531
EB-0006719
WALTER A. TILLIT Jr., P. E.
FLORIDA Lic. # 44167

40 mm SLAT ROLL-UP SHUTTER

ROLLINGSHIELD, INC.
8900 N.W. 119 STREET
HIALEAH, FLORIDA 33018

REV. No	DESCRIPTION	DATE	REV. No	DESCRIPTION	DATE
1	GENERAL	4/25/01	3		
2	–	–	4		

AS SHOWN SCALE

1/14/00 DATE

00-11 DRAWING No

SHEET 4 OF 18

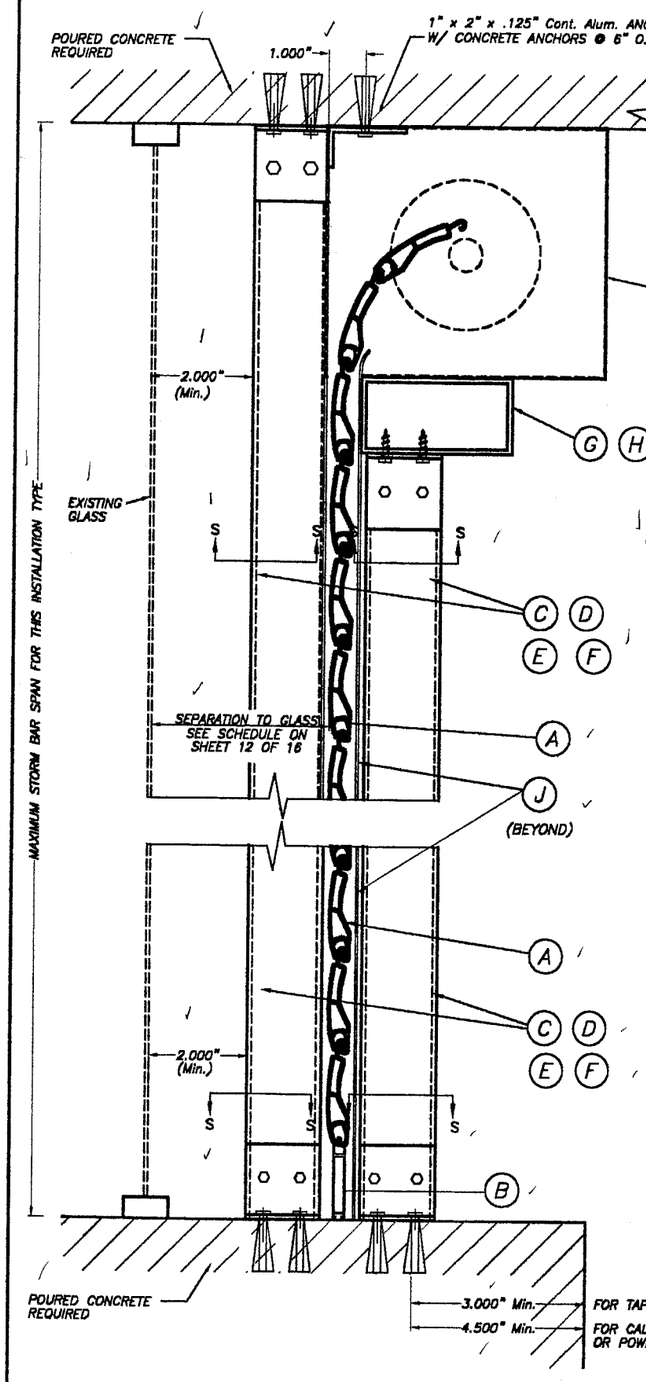

CEILING & FLOOR MOUNTING INSTALLATION W/ FIXED OR REMOVABLE STORM BARS W/CONCRETE ANCHORS

(SEE SECTION "S" FOR ANCHOR TYPE REQUIREMENT)

SCALE : 1/4" = 1"

SINGLE SPAN SECTIONS AND DETAILS ARE SIMILAR TO ABOVE SHOWN WITHOUT STORM BAR & HEADERS.

SECTIONS V – V

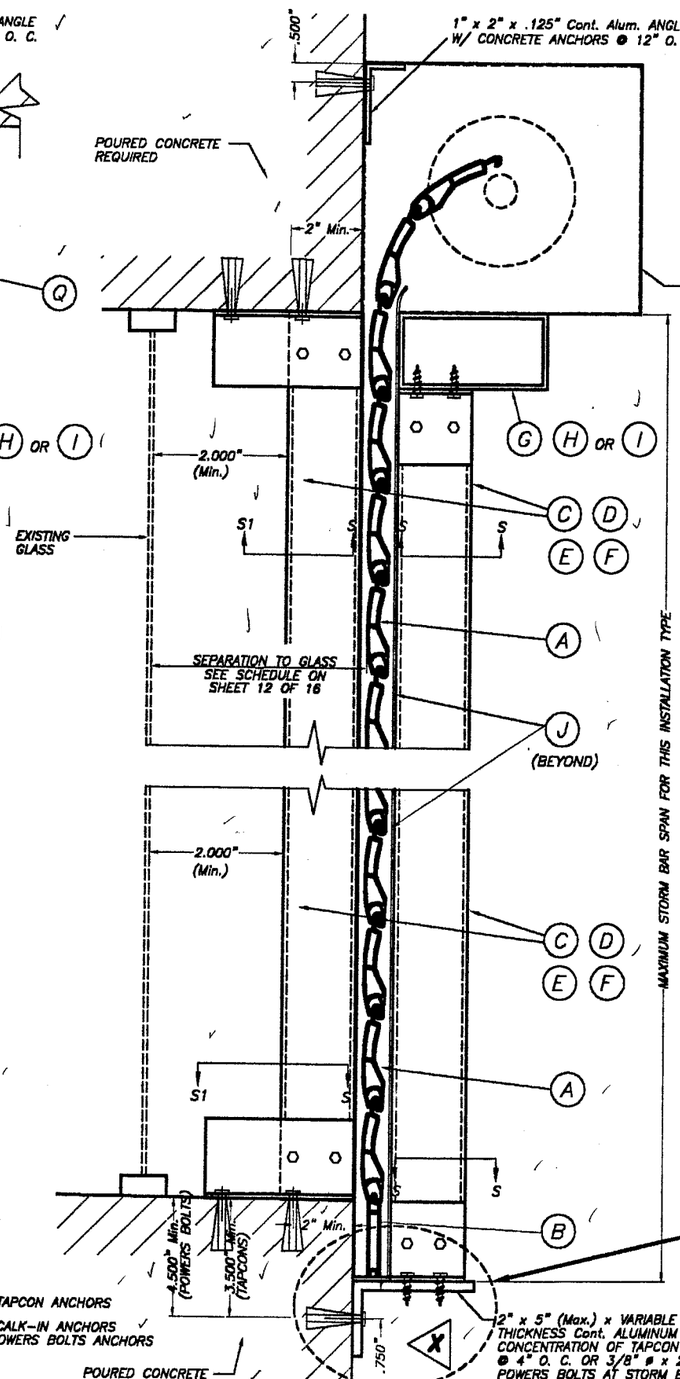

WALL MOUNTING INSTALLATION W/FIXED STORM BARS W/CONCRETE ANCHORS

SCALE : 1/4" = 1"

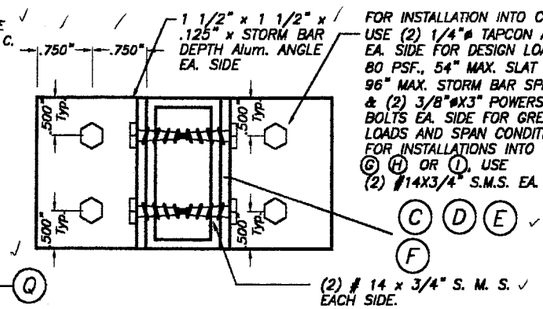

SECTION S – S (FOR FIXED STORM BAR)

SCALE : 1/2" = 1"

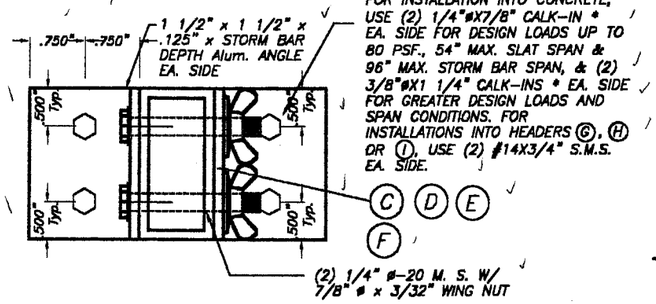

SECTION S – S (FOR REMOVABLE STORM BAR)

SCALE : 1/2" = 1"

ANCHOR & ANGLE SCHEDULE FOR ELEVATION X		
DESIGN LOAD (psf)	ANCHOR TYPE & QUANTITY	ANGLE THICKNESS
72.0 OR LESS **	(6) 1/4" ø TAPCONS	1/8"
160 OR LESS	(4) 3/8" ø x 2 1/4" POWERS BOLTS	1/4"

** W/ 4'-0" Max. SLAT SPAN & 8'-0" MAX. STORM BAR SPAN

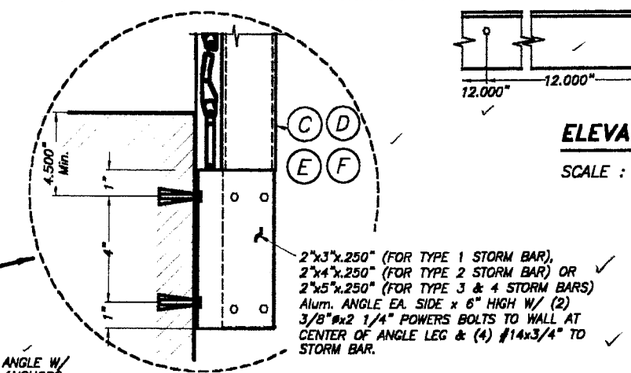

OPTIONAL STORM BAR CONNECTION

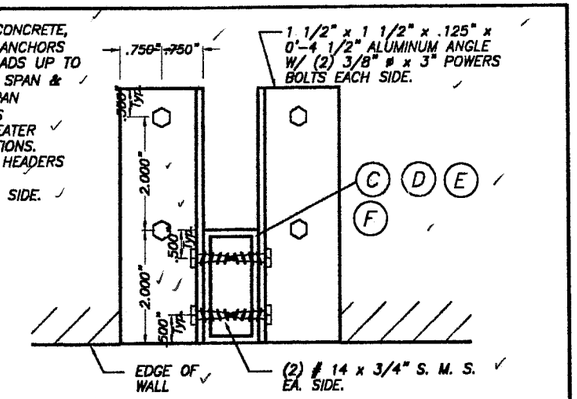

SECTION S1 – S1

SCALE : 1/4" = 1"

* 1/4" ø-20 OR 3/8" ø-16 MACHINE SCREWS USED JOINTLY W/ 1/4" ø x 7/8" OR 3/8" ø x 1 1/4" CALK-IN ANCHORS RESPECTIVELY SHALL BE LEFT TOGETHER W/ ANCHORS AT THE TIME STORM BARS ARE REMOVED. (SEE DET. A).

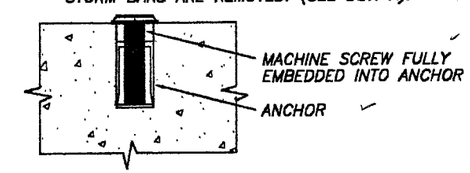

DETAIL A

SCALE : 1/2" = 1"

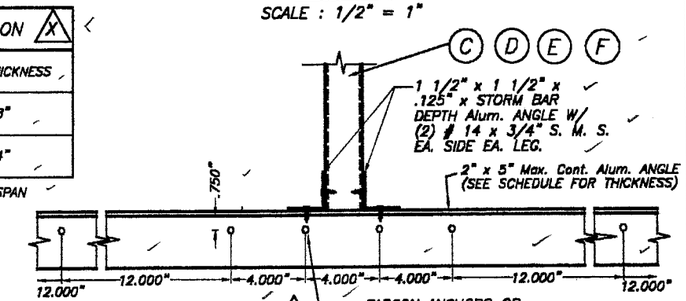

ELEVATION X

SCALE : 1/8" = 1"

APPROVED AS COMPLYING WITH THE SOUTH FLORIDA BUILDING CODE
DATE JUN 07 2001
BY
PRODUCT CONTROL DIVISION
BUILDING CODE COMPLIANCE OFFICE
ACCEPTANCE NO. 00-0822.02
MIAMI-DADE COUNTY

TILTECO INC.
TILLIT TESTING & ENGINEERING COMPANY
6595 N.W. 36th. St., Ste. 217 – VIRGINIA GARDENS, FL 33166
Phone : (305)871-1530 . Fax : (305)871-1531
EB-0006719
WALTER A. TILLIT Jr., P. E.
FLORIDA Lic. # 44167

40mm SLAT ROLL-UP SHUTTER

ROLLINGSHIELD, INC.
8900 N.W. 119 STREET
HIALEAH, FLORIDA 33018

REV. No	DESCRIPTION	DATE	REV. No	DESCRIPTION	DATE
1	GENERAL	4/25/01	3		
2	–	–	4		

AS SHOWN SCALE
1/14/00 DATE
00-11 DRAWING No
SHEET 5 OF 16

5/4/01

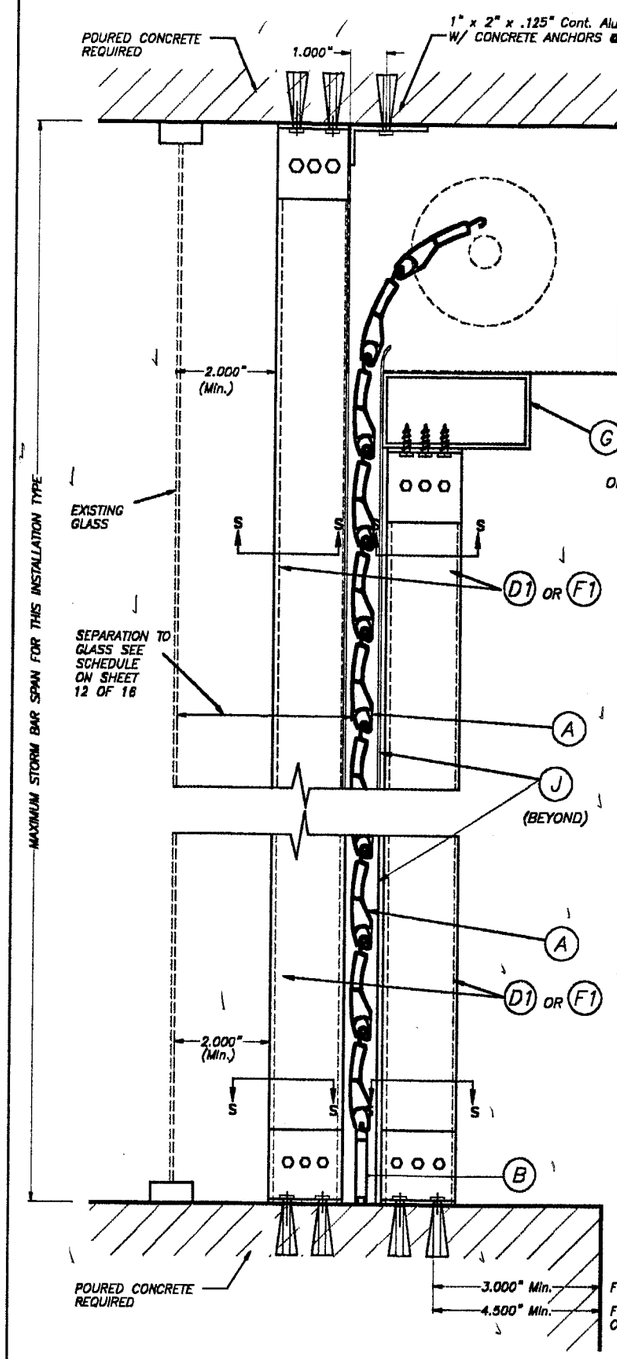

CEILING & FLOOR MOUNTING INSTALLATION W/ FIXED OR REMOVABLE STORM BARS W/CONCRETE ANCHORS

(SEE SECTION "S" FOR ANCHOR TYPE REQUIREMENT)

SCALE : 1/4" = 1"

SINGLE SPAN SECTIONS AND DETAILS ARE SIMILAR TO ABOVE SHOWN WITHOUT STORM BAR & HEADERS.

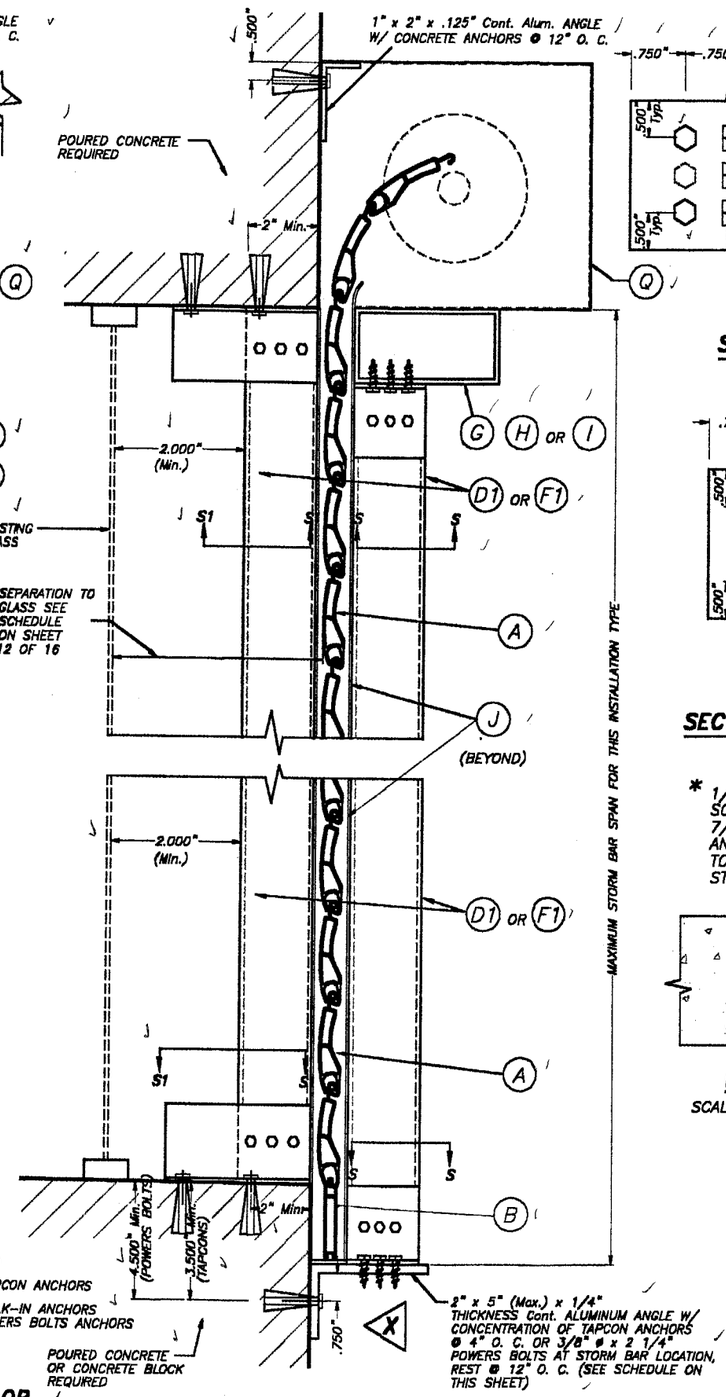

WALL MOUNTING INSTALLATION W/FIXED STORM BARS W/CONCRETE ANCHORS

SCALE : 1/4" = 1"

SECTIONS V – V

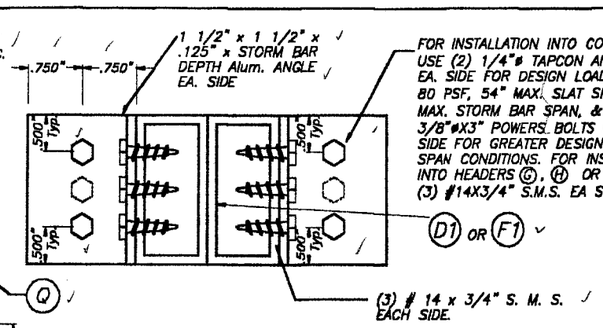

SECTION S – S (FOR FIXED STORM BAR)

SCALE : 1/2" = 1"

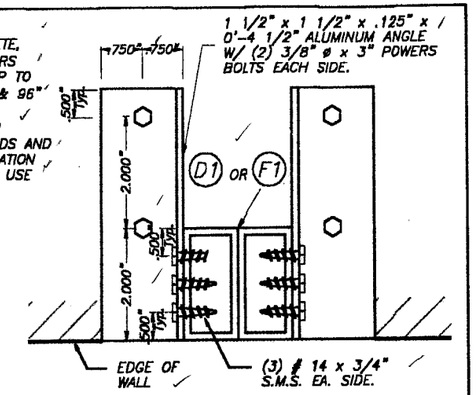

SECTION S1 – S1

SCALE : 1/4" = 1"

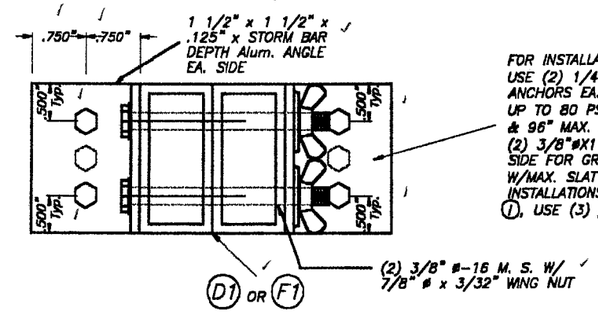

SECTION S – S (FOR REMOVABLE STORM BAR)

SCALE : 1/2" = 1"

* 1/4" ø-20 OR 3/8" ø-16 MACHINE SCREWS USED JOINTLY W/ 1/4" ø x 7/8" OR 3/8" ø x 1 1/4" CALK-IN ANCHORS RESPECTIVELY SHALL BE LEFT TOGETHER W/ ANCHORS AT THE TIME STORM BARS ARE REMOVED. (SEE DET. A).

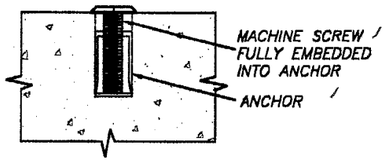

DETAIL A

SCALE : 1/2" = 1"

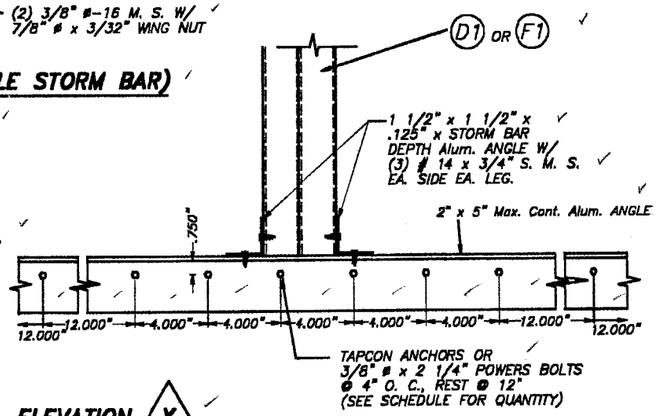

ELEVATION X

SCALE : 1/8" = 1"

ANCHOR & ANGLE SCHEDULE FOR ELEVATION X	
DESIGN LOAD (psf)	ANCHOR TYPE & QUANTITY
72.0 OR LESS **	(6) 1/4" ø TAPCONS
160 OR LESS	(6) 3/8" ø x 2 1/4" POWERS BOLTS

** W/ 4'-0" Max. SLAT SPAN & 8'-0" MAX. STORM BAR SPAN

APPROVED AS COMPLYING WITH THE SOUTH FLORIDA BUILDING CODE
DATE JUN 07 2001
BY
PRODUCT CONTROL DIVISION
BUILDING CODE COMPLIANCE OFFICE
ACCEPTANCE NO. 00-0822.02
MIAMI-DADE COUNTY

TILTECO INC.
TILLIT TESTING & ENGINEERING COMPANY
8595 N.W. 36th. St., Ste. 217 – VIRGINIA GARDENS, FL 33166
Phone : (305)871-1530 . Fax : (305)871-1531
EB-0006719
WALTER A. TILLIT Jr., P. E.
FLORIDA Lic. # 44167

40mm SLAT ROLL-UP SHUTTER

ROLLINGSHIELD, INC.
8900 N.W. 119 STREET
HIALEAH, FLORIDA 33018

REV. No	DESCRIPTION	DATE	REV. No	DESCRIPTION	DATE
1	GENERAL	4/25/01	3		
2	–	–	4		

AS SHOWN SCALE
1/14/00 DATE
00-11 DRAWING No
SHEET 5A OF 16

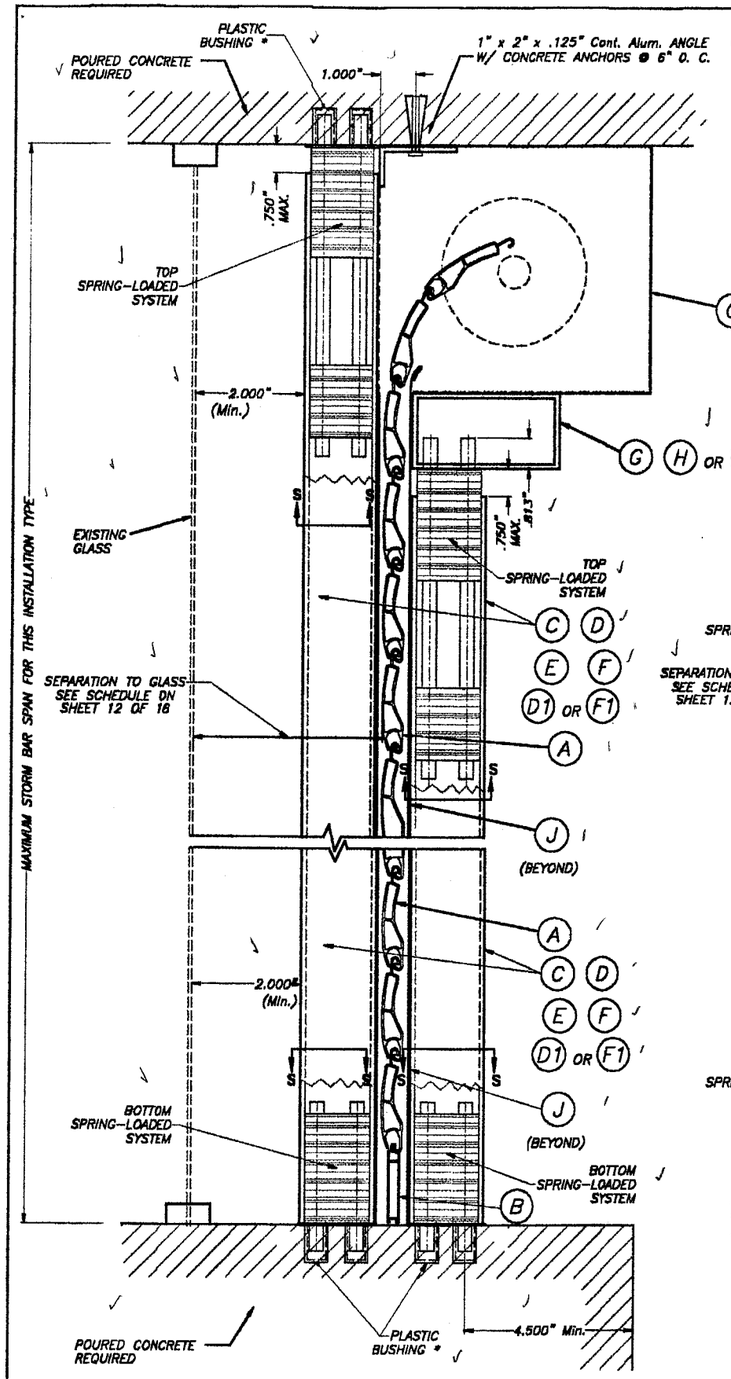

CEILING & FLOOR MOUNTING INSTALLATION W/ REMOVABLE STORM BARS W/SPRING-LOADED SYSTEM *

SCALE : 1/4" = 1"

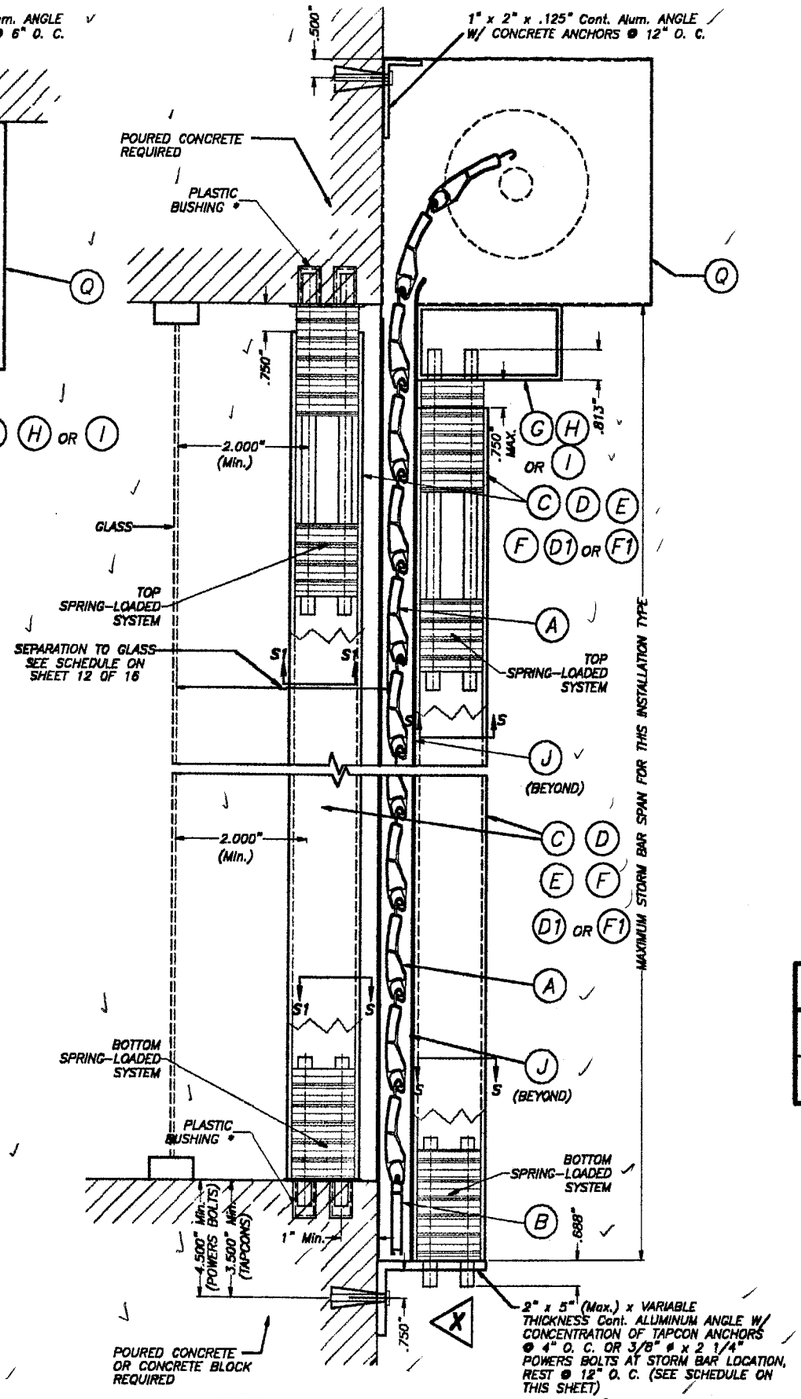

WALL MOUNTING INSTALLATION W/ REMOVABLE STORM BARS W/SPRING-LOADED SYSTEM *

SCALE : 1/4" = 1"

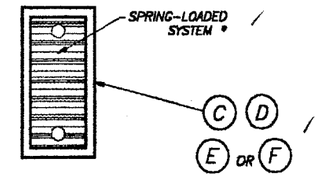

SECTION S – S : SINGLE STORM BAR

SCALE : 1/2" = 1"

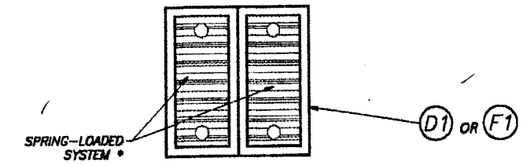

SECTION S – S : DOUBLE STORM BAR

SCALE : 1/2" = 1"

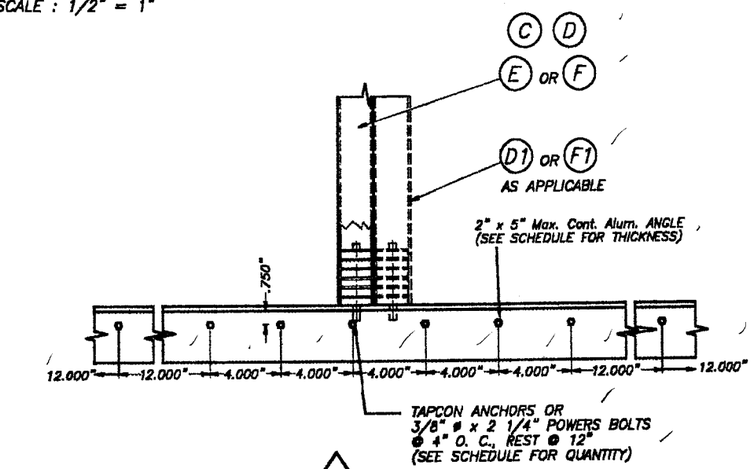

ELEVATION X

SCALE : 1/8" = 1"

ANCHOR & ANGLE SCHEDULE FOR ELEVATION X

DESIGN LOAD (psf)	ANCHOR TYPE & QUANTITY	ANGLE THICKNESS	STORM BAR TYPE
70.0 OR LESS **	(6) 1/4" ø TAPCONS	1/8"	C D E F D1 F1

** W/ 4'-0" Max. SLAT SPAN & 8'-0" MAX. STORM BAR SPAN

SECTIONS V – V

+ SEE SHEET 9 OF 16 FOR SPECS. & DETAILS.

APPROVED AS COMPLYING WITH THE SOUTH FLORIDA BUILDING CODE
DATE JUN 07 2001
BY
PRODUCT CONTROL DIVISION
BUILDING CODE COMPLIANCE OFFICE
ACCEPTANCE NO. 00-0822.02
MIAMI-DADE COUNTY

TILTECO INC.
TILLIT TESTING & ENGINEERING COMPANY
8595 N.W. 30th. St., Ste. 217 – VIRGINIA GARDENS, FL 33166
Phone : (305)871-1630 . Fax : (305)871-1531
EB-0006719
WALTER A. TILLIT Jr., P. E.
FLORIDA Lic. # 44167

40mm SLAT ROLL-UP SHUTTER

ROLLINGSHIELD, INC.
8900 N.W. 119 STREET
HIALEAH, FLORIDA 33018

REV. No	DESCRIPTION	DATE	REV. No	DESCRIPTION	DATE
1	GENERAL	4/25/01	3		
2	–	–	4		

AS SHOWN SCALE
1/14/00 DATE
00-11 DRAWING No
SHEET 6 OF 16

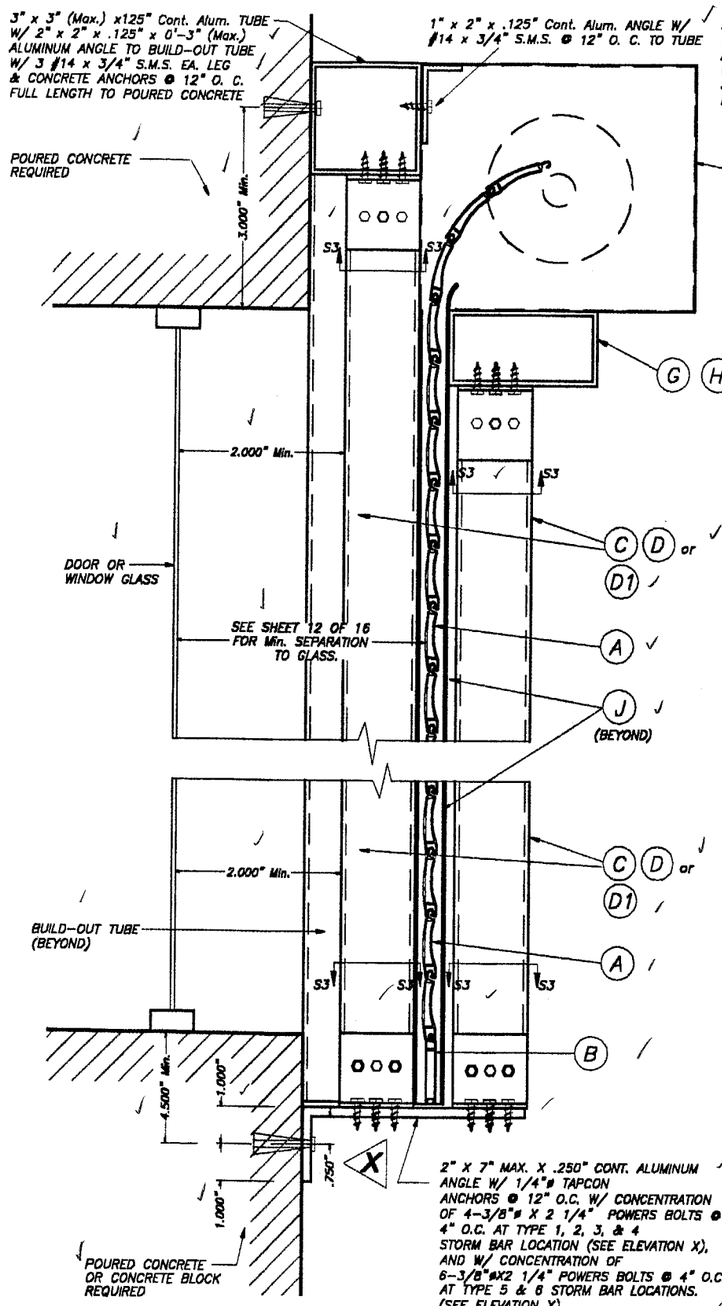

CASE I

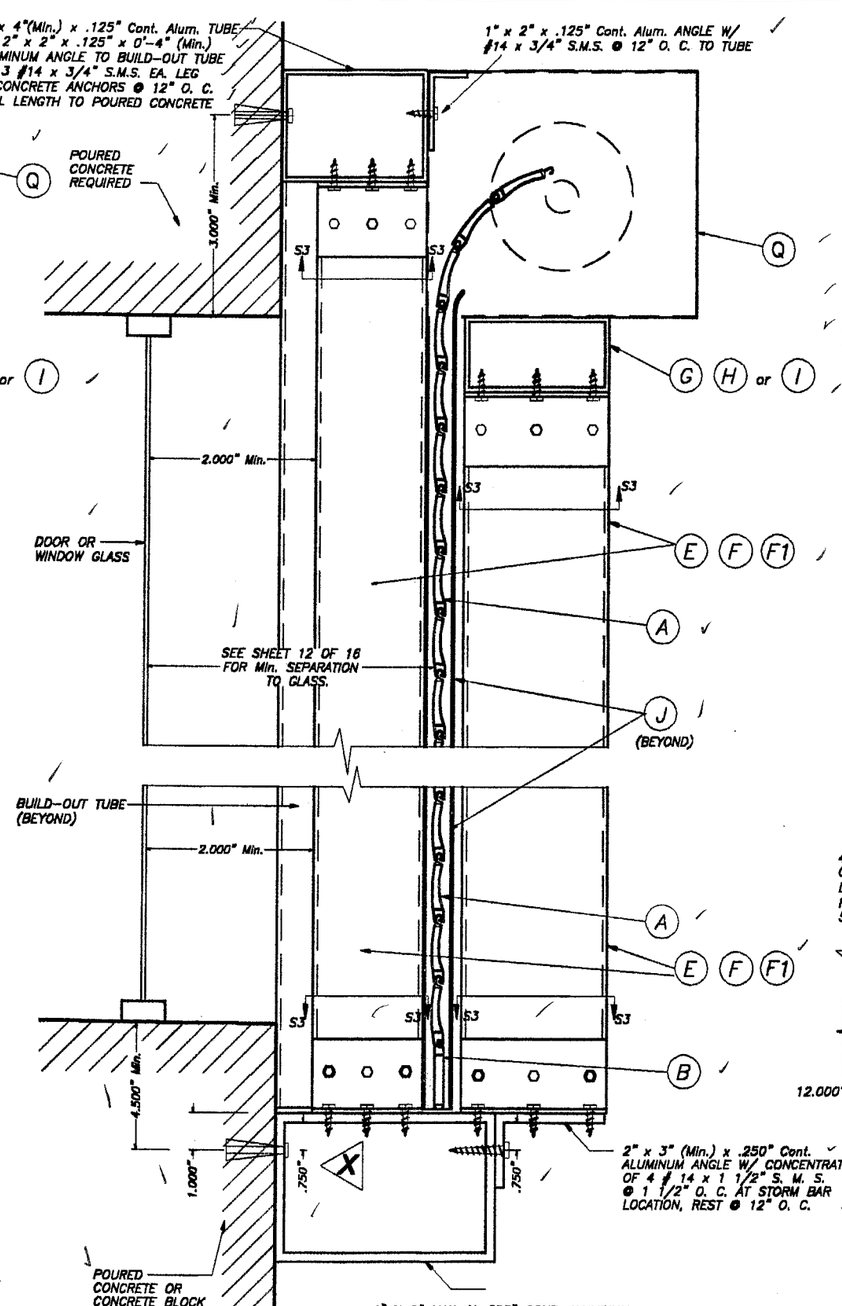

CASE II

FIXED STORM BAR CONNECTION AT BUILD-OUT INSTALLATIONS W/SHEET METAL SCREWS

SCALE : 1/4" = 1"

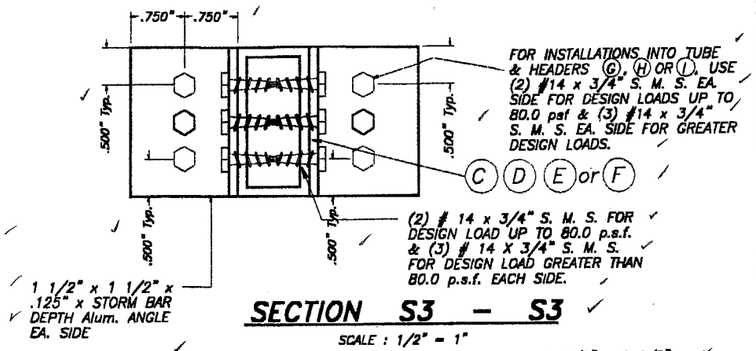

SECTION S3 - S3

SCALE : 1/2" = 1"

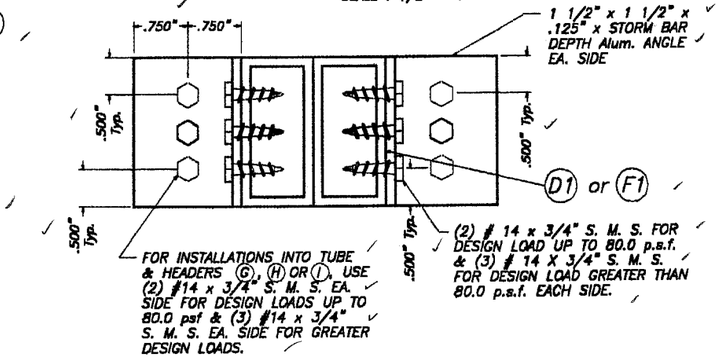

SECTION S3 - S3

SCALE : 1/2" = 1"

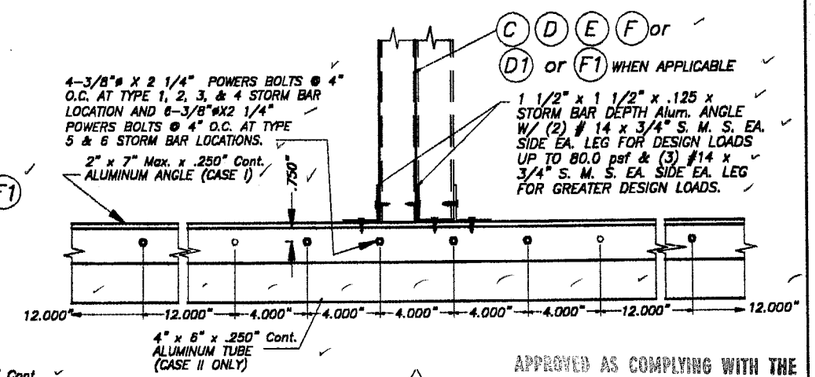

ELEVATION X

SCALE : 1/8" = 1"

NOTE:
SINGLE SPAN SECTIONS AND DETAILS ARE SIMILAR TO ABOVE SHOWN WITHOUT STORM BAR & HEADERS.

SECTIONS V - V

APPROVED AS COMPLYING WITH THE SOUTH FLORIDA BUILDING CODE
DATE JUN 07 2001
BY
PRODUCT CONTROL DIVISION
BUILDING CODE COMPLIANCE OFFICE
ACCEPTANCE NO. 00-0822.02
MIAMI-DADE COUNTY

TILLECO INC.
TILLIT TESTING & ENGINEERING COMPANY
8585 N.W. 36th. St., Ste. 217 - VIRGINIA GARDENS, FL 33166
Phone : (305)871-1530 . Fax : (305)871-1531
EB-0006719
WALTER A. TILLIT Jr., P. E.
FLORIDA Lic. # 44167

5/2/01

40mm SLAT ROLL-UP SHUTTER

ROLLINGSHIELD, INC.
8900 N.W. 119 STREET
HIALEAH, FLORIDA 33018

REV. No	DESCRIPTION	DATE	REV. No	DESCRIPTION	DATE
1	GENERAL	4/25/01	3		
2	-	-	4		

AS SHOWN SCALE
1/14/00 DATE
00-11 DRAWING No
SHEET 7 OF 16

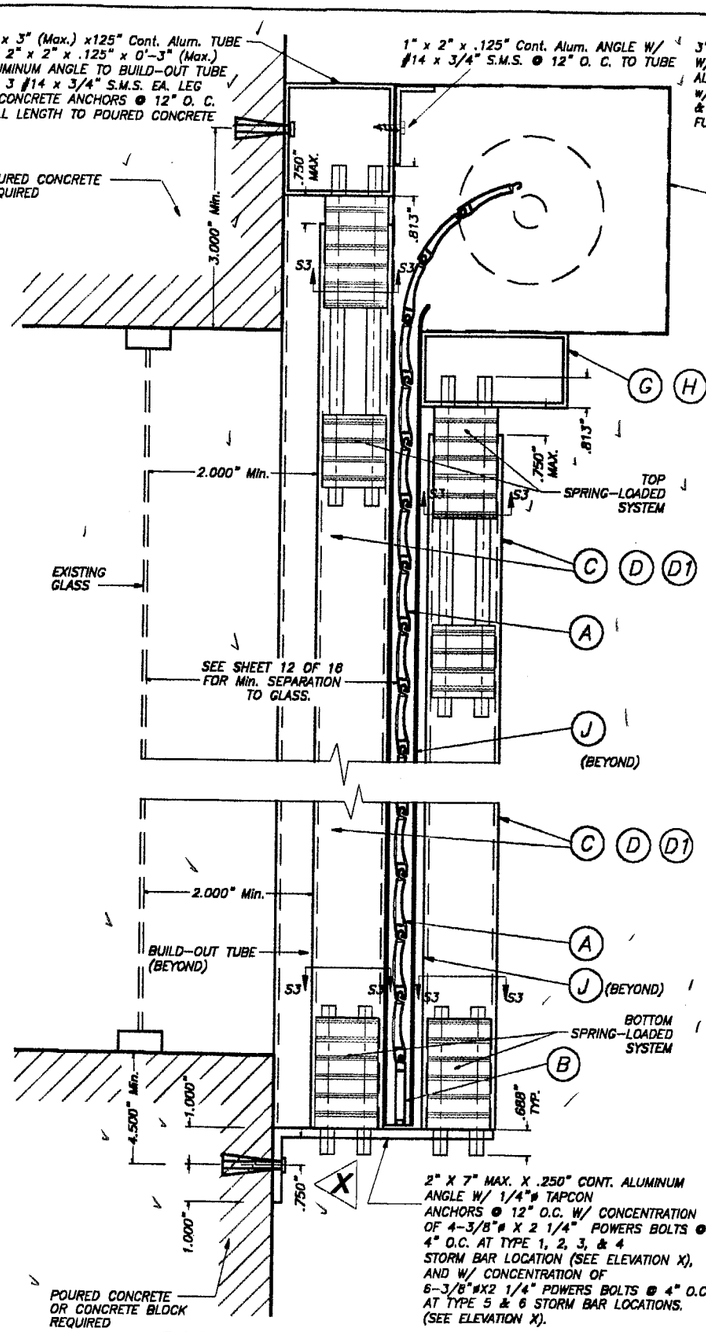

CASE I

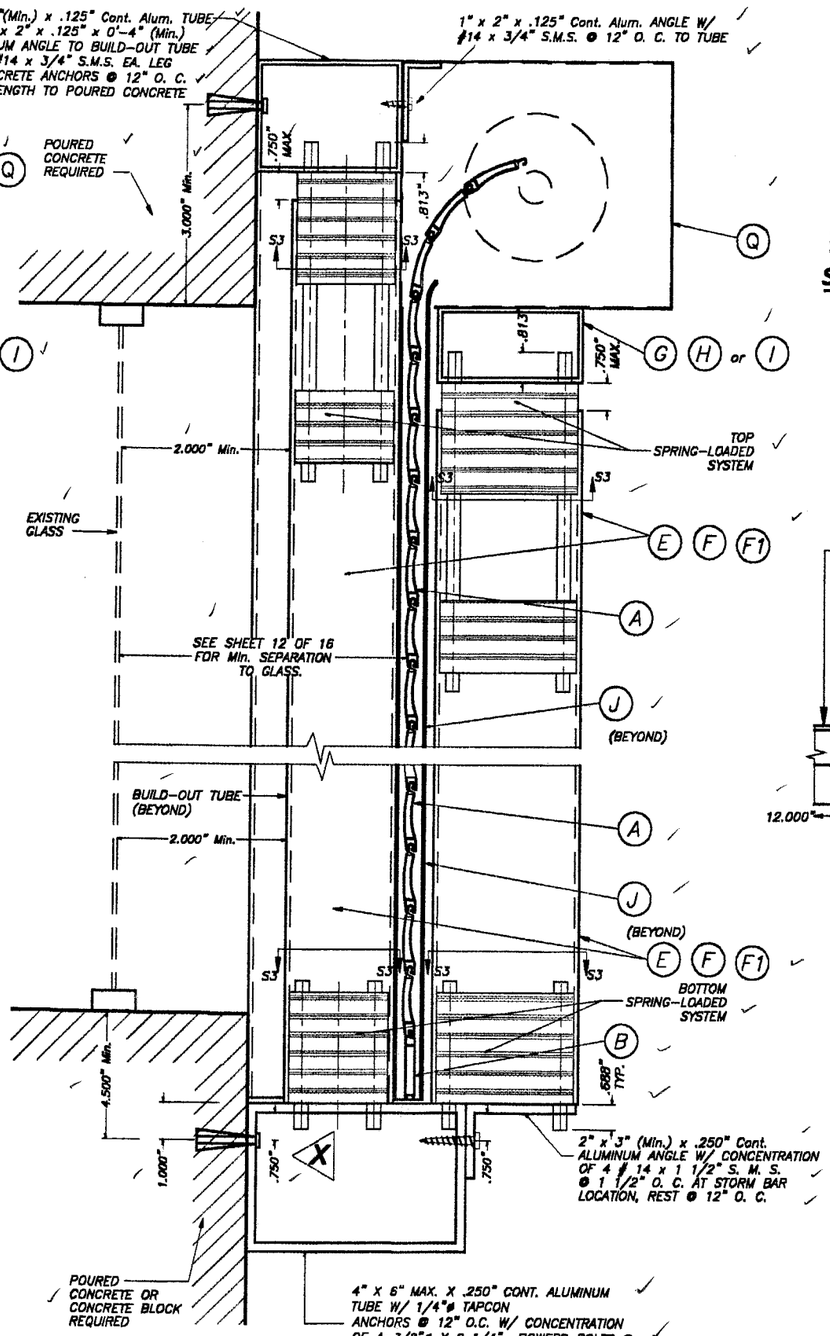

CASE II

REMOVABLE STORM BAR CONNECTION AT BUILD-OUT INSTALLATIONS W/SPRING-LOADED SYSTEM *

SCALE : 1/4" = 1"

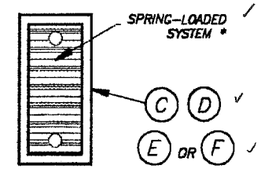

SECTION S - S : SINGLE STORM BAR

SCALE : 1/2" = 1"

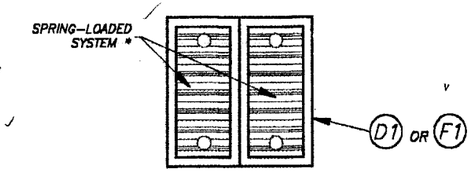

SECTION S - S : DOUBLE STORM BAR

SCALE : 1/2" = 1"

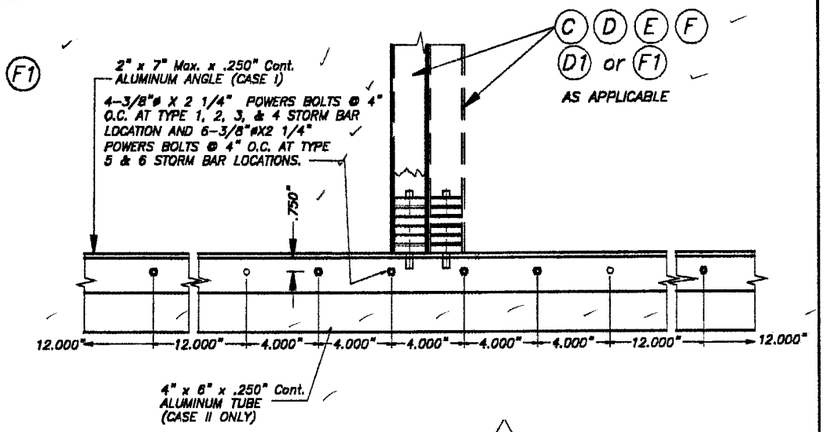

ELEVATION X

SCALE : 1/8" = 1"

SECTIONS V - V

* SEE SHEET 9 OF 16 FOR SPECS. & DETAILS.

5/2/01

APPROVED AS COMPLYING WITH THE SOUTH FLORIDA BUILDING CODE
DATE JUN 07 2001
BY
PRODUCT CONTROL DIVISION
BUILDING CODE COMPLIANCE OFFICE
ACCEPTANCE NO. 00-0822.02

MIAMI-DADE COUNTY

TILTECO INC.
TILLIT TESTING & ENGINEERING COMPANY
6585 N.W. 36th. St., Ste. 217 - VIRGINIA GARDENS, FL 33166
Phone : (305)871-1530 . Fax : (305)871-1531
EB-0006719
WALTER A. TILLIT Jr., P. E.
FLORIDA Lic. # 44167

40mm SLAT ROLL-UP SHUTTER

ROLLINGSHIELD, INC.
8900 N.W. 119 STREET
HIALEAH, FLORIDA 33018

REV. No	DESCRIPTION	DATE	REV. No	DESCRIPTION	DATE
1	GENERAL	4/25/01	3		
2	-	-	4		

AS SHOWN SCALE
1/14/00 DATE
00-11 DRAWING No
SHEET 8 OF 16

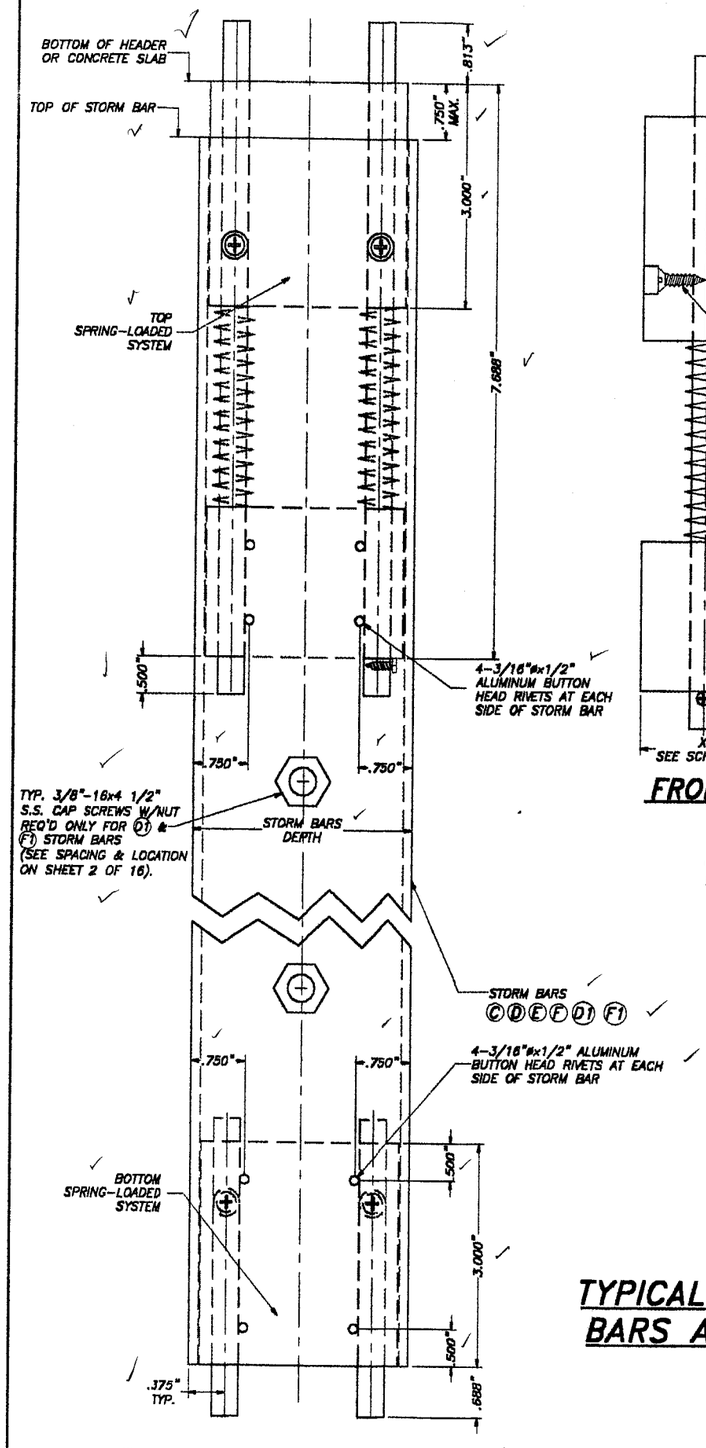

TYPICAL CONNECTION TO STORM BARS (SIDE VIEW)

SCALE: 1/2" = 1"

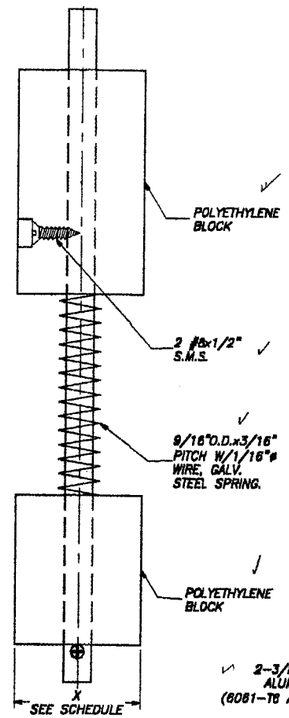

FRONT

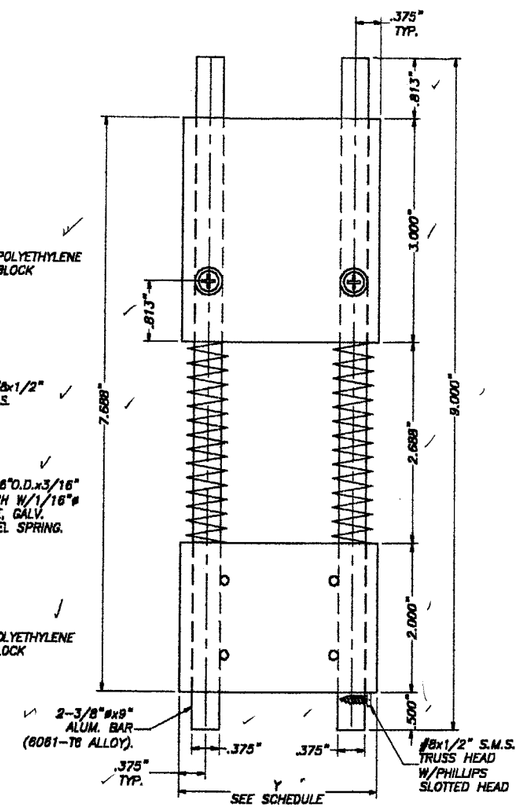

SIDE VIEW

TOP SPRING-LOADED SYSTEM

SCALE: 1/2" = 1"

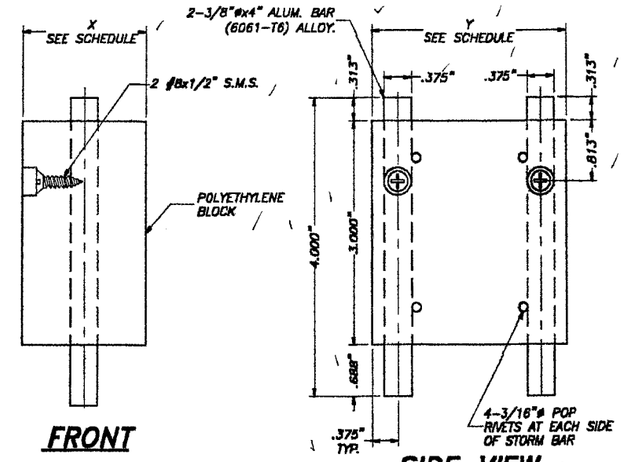

FRONT

SIDE VIEW

BOTTOM SPRING-LOADED SYSTEM

SCALE: 1/2" = 1"

X, Y DIMENSIONS FOR A GIVEN TYPE OF STORM BAR		
STORM BAR TYPE	X(in)	Y(in)
C	1 19/32"	1 19/32"
D	1 23/32"	2 23/32"
E	1 23/32"	3 23/32"
F	1 15/32"	3 15/32"
D1	1 23/32"	2 23/32"
F1	1 15/32"	3 15/32"

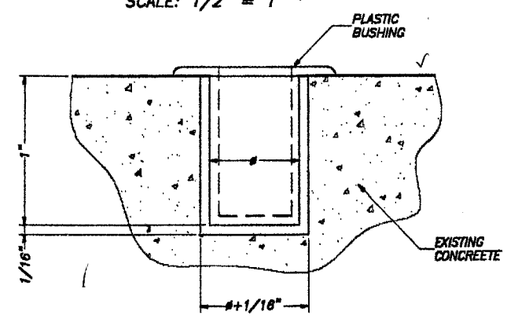

ENGAGEMENT HOLE DETAIL (IN CONCRETE) FOR REMOVABLE SPRING-LOADED STORM BARS

SCALE: 1" = 1"

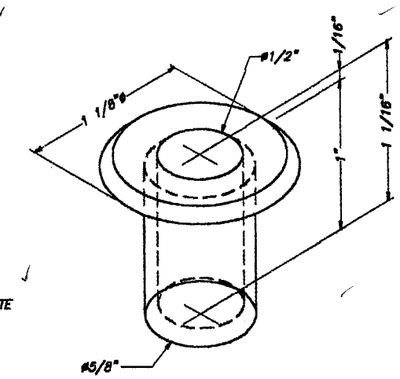

PLASTIC BUSHING: DETAIL 1(ISOMETRIC)

SCALE: 1" = 1"

NOTES:

(1) ENGAGEMENT HOLE DRILLED IN CONCRETE SHALL BE 5/8"ø x 1" DEEP, W/1/16" MAX. TOLERANCE IN BOTH DIAMETER & DEPTH.

(2) ENGAGEMENT HOLE DRILLED IN CONCRETE SHALL BE PERMANENTLY PROTECTED BY FITTING PLASTIC BUSHING (SEE DETAIL 1) INTO HOLE. IT SHALL BE THE RESPONSIBILITY OF SHUTTER'S OWNER TO PERMANENTLY KEEP BUSHING FREE OF DUST & MOLD BY REMOVING IT FROM ENGAGEMENT HOLE, CLEANING IT AND REPOSITIONING IT INTO HOLE AS INDICATED ON ABOVE DETAIL.

TYPICAL SPRING-LOADED SYSTEM FOR REMOVABLE STORM BARS AS ALTERNATE TO THE USE OF CALK-IN ANCHORS

APPROVED AS COMPLYING WITH THE SOUTH FLORIDA BUILDING CODE
DATE JUN 07 2001
BY
PRODUCT CONTROL DIVISION
BUILDING CODE COMPLIANCE OFFICE
ACCEPTANCE NO. 00-0822.02
MIAMI-DADE COUNTY

5/2/01

TILTECO INC.
TILLIT TESTING & ENGINEERING COMPANY
6595 N.W. 36th. St., Ste. 217 - VIRGINIA GARDENS, FL 33166
Phone : (305)871-1530 . Fax : (305)871-1531
EB-0006719
WALTER A. TILLIT Jr., P. E.
FLORIDA Lic. # 44167

40 mm SLAT ROLL-UP SHUTTER

ROLLINGSHIELD, INC.
8900 N.W. 119 STREET
HIALEAH, FLORIDA 33018

REV. No	DESCRIPTION	DATE	REV. No	DESCRIPTION	DATE
1	GENERAL	4/25/01	3		
2	-	-	4		

AS SHOWN SCALE
1/14/00 DATE
00-11 DRAWING No
SHEET 9 OF 16

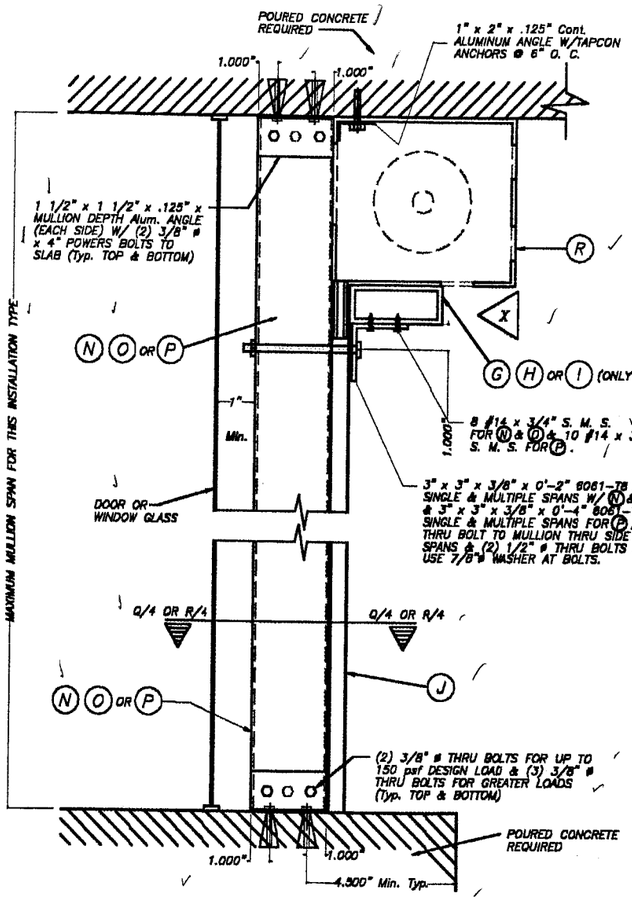

FLOOR/CEILING MOUNTING : SECTION W-W (1), W/O HEADER SECTION W-W (2), W/HEADER

SCALE : 1/8" = 1"

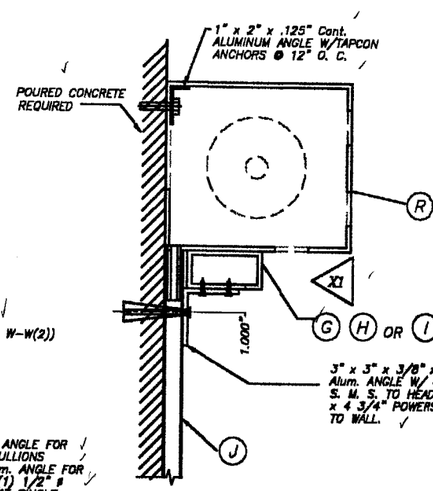

WALL MOUNTING : SECTION W-W (3)

SCALE : 1/8" = 1"

NOTE :
THIS INSTALLATION IS ONLY VALID FOR STORM BARS WITH Max. SPAN = 8'-0", HEADERS WITH 12'-0" Max. SINGLE SPAN & 80 psf MAXIMUM DESIGN LOAD OR FOR STORM BARS WITH MAX. SPAN=6'-0"; HEADERS WITH 15'-0" MAX. SINGLE SPAN & 80 p.s.f. MAXIMUM DESIGN LOAD.

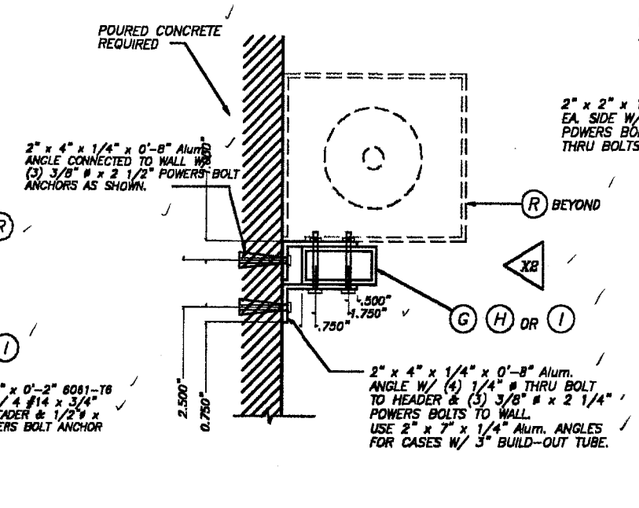

WALL MOUNTING : SECTION W-W(3)

SCALE : 1/8" = 1"

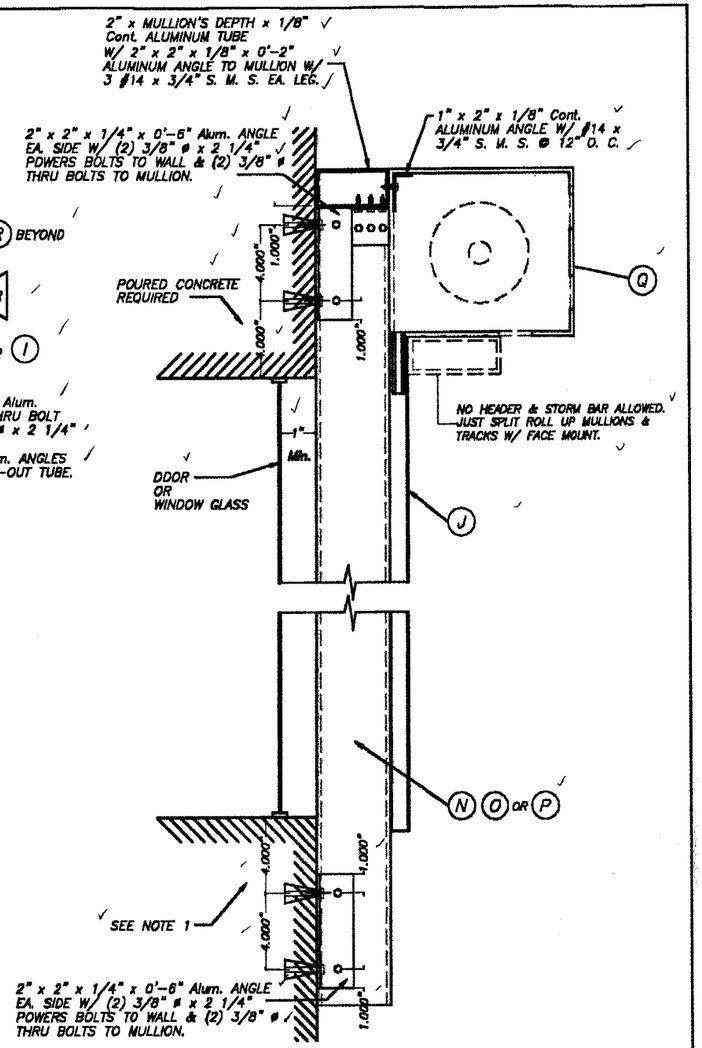

WALL MOUNTING : MULLION CONNECTION AT TOP & BOTTOM : SECTION W-W (1)

SCALE : 1/8" = 1"

NOTE 1 :
EXISTING WALL MAY BE POURED CONCRETE OR CONCRETE BLOCK FOR DESIGN LOADS UP TO 150.0 psf AND SHALL BE POURED CONCRETE OR CONCRETE FILLED BLOCKS FOR GREATER LOADS.

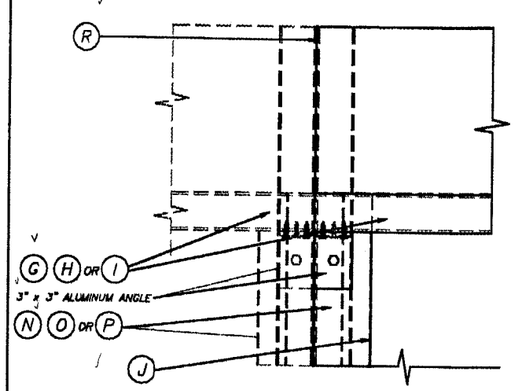

ELEVATION X

SCALE : 1/8" = 1"

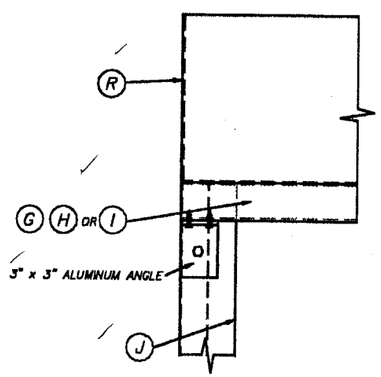

ELEVATION X1

SCALE : 1/8" = 1"

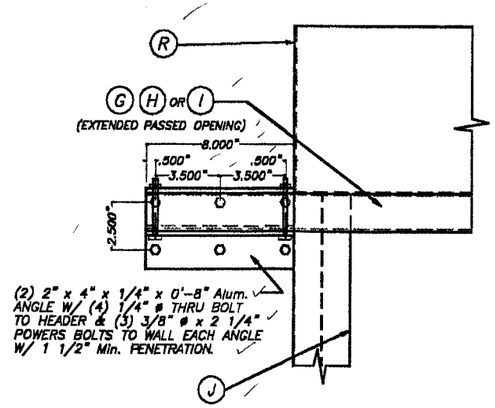

ELEVATION X2

SCALE : 1/8" = 1"

TYPICAL HEADER CONNECTION AT ENDS: SECTIONS W-W

APPROVED AS COMPLYING WITH THE SOUTH FLORIDA BUILDING CODE
DATE JUN 07 2001
BY
PRODUCT CONTROL DIVISION
BUILDING CODE COMPLIANCE OFFICE
ACCEPTANCE NO. 00-0822.02

MIAMI-DADE COUNTY

TILTECO INC.
TILLIT TESTING & ENGINEERING COMPANY
8595 N.W. 38th. St., Ste. 217 – VIRGINIA GARDENS, Fl. 33166
Phone : (305)871-1530 . Fax : (305)871-1531
EB-0006719
WALTER A. TILLIT Jr., P. E.
FLORIDA Lic. # 44167

40mm SLAT ROLL-UP SHUTTER

ROLLINGSHIELD, INC.
8900 N.W. 119 STREET
HIALEAH, FLORIDA 33018

REV. No	DESCRIPTION	DATE	REV. No	DESCRIPTION	DATE
1	GENERAL	4/25/01	3		
2	–	–	4		

AS SHOWN
SCALE

1/14/00
DATE

00-11
DRAWING No

SHEET 10 OF 18

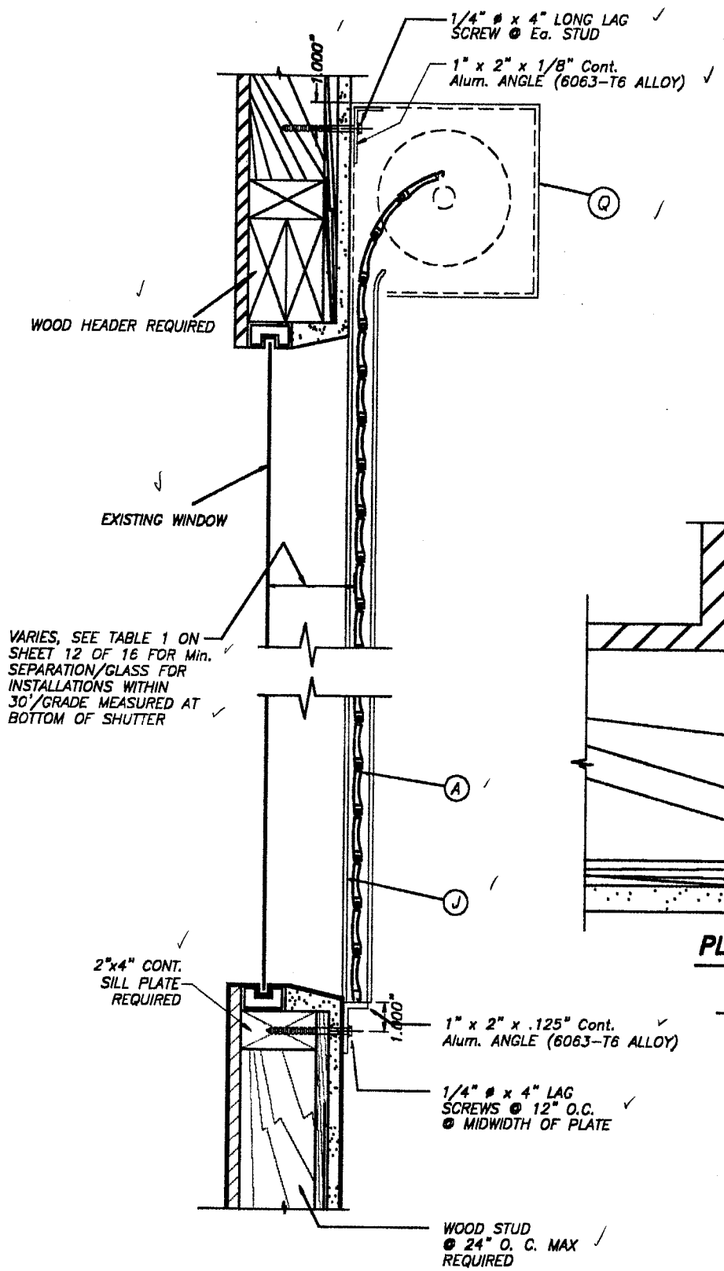

WALL MOUNTING INSTALLATION

SINGLE SPAN CONDITION

N. T. S.

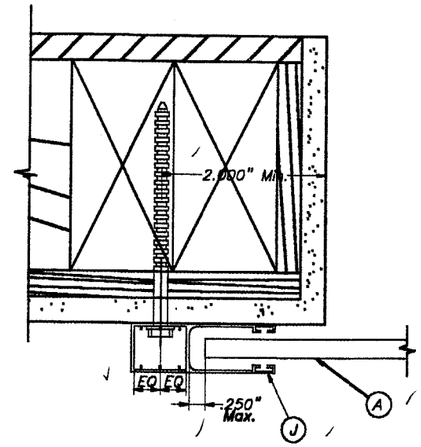

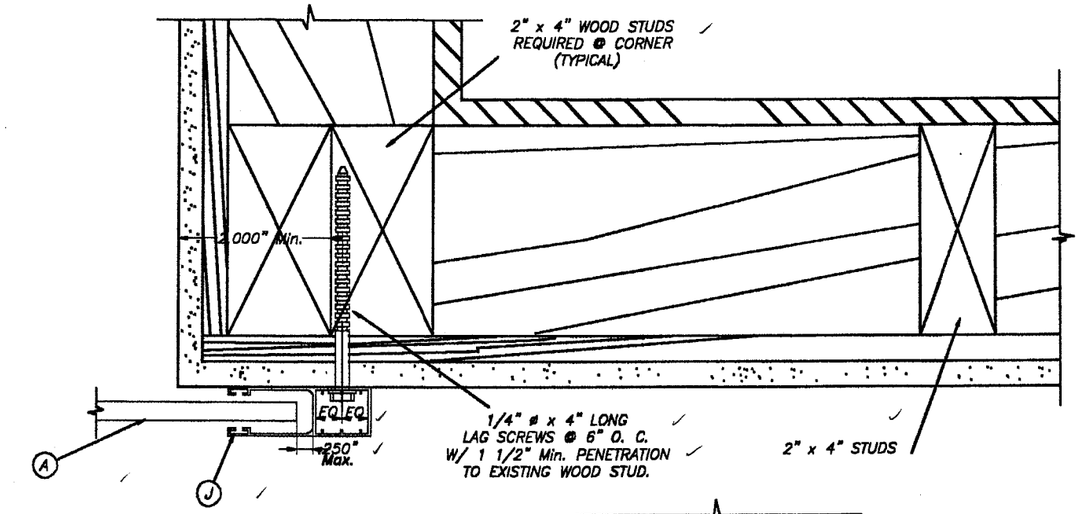

PLAN A (SECTION)

WALL MOUNT

SCALE : 3/8" = 1"

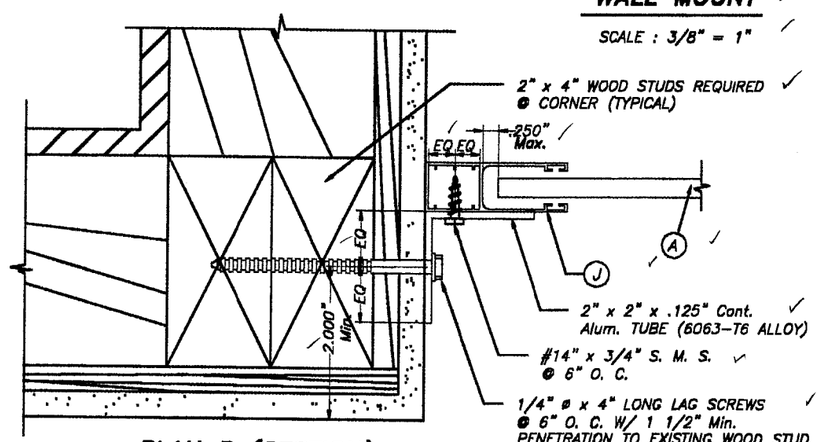

PLAN B (SECTION)

INSIDE MOUNT

SCALE : 3/8" = 1"

NOTES:

1. INSTALLATIONS ARE ONLY VALID FOR BUILDINGS WITH DESIGN LOADS UP TO 75.0 psf.
2. FOR NEW FRAME CONSTRUCTION: WOOD MEMBER TO BE SOUTHERN PINE No. 2 W/ SPECIFIC DENSITY OF 0.55 OR EQUAL.
3. MINIMUM PENETRATION OF LAG SCREWS INTO WOOD MEMBER TO BE 1 1/2".

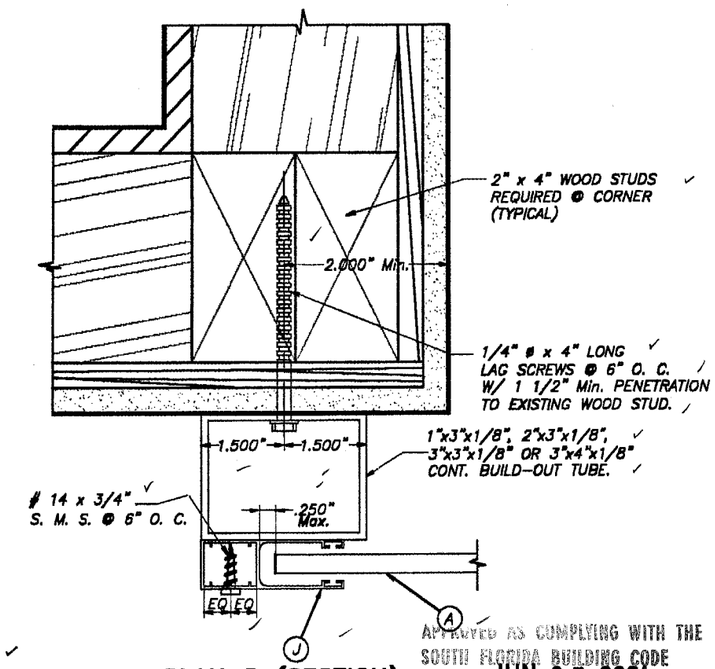

PLAN C (SECTION)

BUILD-OUT

SCALE : 3/8" = 1"

APPROVED AS COMPLYING WITH THE SOUTH FLORIDA BUILDING CODE
DATE JUN 07 2001
BY
PRODUCT CONTROL DIVISION
BUILDING CODE COMPLIANCE OFFICE
ACCEPTANCE NO. 00-0822.02

MIAMI-DADE COUNTY

5/2/01

TILTECO INC.
TILLIT TESTING & ENGINEERING COMPANY
6595 N.W. 36th. St., Ste. 217 - VIRGINIA GARDENS, FL 33166
Phone : (305)871-1630 . Fax : (305)871-1531
EB-0006719
WALTER A. TILLIT Jr., P. E.
FLORIDA Lic. # 44167

40 mm SLAT ROLL-UP SHUTTER

ROLLINGSHIELD, INC.
8900 N.W. 119 STREET
HIALEAH, FLORIDA 33018

REV. No	DESCRIPTION	DATE	REV. No	DESCRIPTION	DATE
1	GENERAL	4/25/01	3		
2	-	-	4		

AS SHOWN SCALE
1/14/00 DATE
00-11 DRAWING No
SHEET 11 OF 16

SLAT PERFORMANCE CHART
MAXIMUM NEGATIVE DESIGN PRESSURE RATING "W" (p. s. f.) AND CORRESPONDING MAXIMUM SLAT SPAN "L" FOR TYPE 1 SLAT

(USE NEGATIVE PRESSURE VALUES AS PER ASCE 7-88)

SLAT TYPE / Max. DESIGN LOAD "W" (p.s.f.)	MAXIMUM SLAT SPAN	MINIMUM SEPARATION TO GLASS	
	SINGLE & MULTIPLE UNIT *	SINGLE & MULTIPLE UNIT **	SINGLE & MULTIPLE UNIT ***
40.0	4'-0"	2 7/8"	2 5/8"
45.0	3'-10"	2 7/8"	2 5/8"
50.0	3'-9"	2 7/8"	2 5/8"
55.0	3'-7"	2 7/8"	2 5/8"
60.0	3'-6"	2 7/8"	2 5/8"
65.0	3'-5"	2 7/8"	2 5/8"
70.0	3'-4"	2 7/8"	2 5/8"
75.0	3'-3"	2 7/8"	2 5/8"
80.0	3'-2"	2 7/8"	2 5/8"
85.0	3'-1"	2 7/8"	2 5/8"
90.0	3'-1"	2 7/8"	2 5/8"
95.0	3'-0"	2 7/8"	2 5/8"
100.0	2'-11"	2 7/8"	2 5/8"
105.0	2'-11"	2 7/8"	2 5/8"
110.0	2'-10"	2 7/8"	2 5/8"
115.0	2'-10"	2 7/8"	2 5/8"
120.0	2'-9"	2 7/8"	2 5/8"
125.0	2'-9"	2 7/8"	2 5/8"
130.0	2'-8"	2 7/8"	2 5/8"
135.0	2'-8"	2 7/8"	2 5/8"
140.0	2'-7"	2 7/8"	2 5/8"
145.0	2'-7"	2 7/8"	2 5/8"
150.0	2'-7"	2 7/8"	2 5/8"
155.0	2'-6"	2 7/8"	2 5/8"
160.0	2'-6"	2 7/8"	2 5/8"

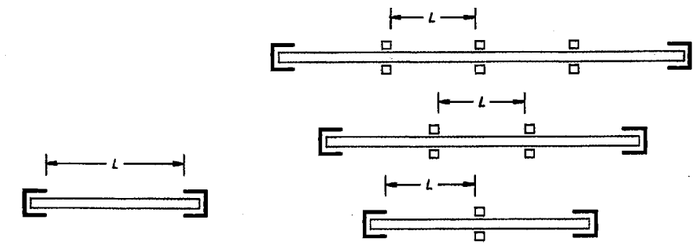

SINGLE SPAN

MULTIPLE SPAN

SPAN LAYOUT

* SPANS VALID FOR EVERY INSTALLATION LOCATED AT ANY ELEVATION OF BUILDING MEASURED AT BOTTOM OF SHUTTER. MINIMUM SEPARATION TO GLASS FOR SINGLE AND MULTIPLE UNITS SHALL BE MEASURED FROM BACK OF SLAT TO GLASS.

** MINIMUM SEPARATION TO GLASS FOR SHUTTERS INSTALLED WITHIN THE FIRST 30'-0" ELEVATION OF BUILDING AND MAXIMUM SPAN. SEE TABLE 1 FOR Min. SEPARATION TO GLASS FOR SPANS LESS THAN THE Max. ALLOWED.

*** MINIMUM SEPARATION TO GLASS FOR SHUTTERS INSTALLED ABOVE 30'-0" ELEVATION OF BUILDING, MEASURED AT BOTTOM OF SHUTTER.

TABLE 1:

SLAT SPAN (ft.)	MINIMUM SEPARATION TO GLASS
48" OR LESS	2 7/8"

APPROVED AS COMPLYING WITH THE SOUTH FLORIDA BUILDING CODE
DATE JUN 07 2001
BY
PRODUCT CONTROL DIVISION
BUILDING CODE COMPLIANCE OFFICE
ACCEPTANCE NO. 00-0822.02
MIAMI-DADE COUNTY

9/01

TILTECO INC.
TILLIT TESTING & ENGINEERING COMPANY
6595 N.W. 36th. St., Ste. 217 – VIRGINIA GARDENS, FL 33166
Phone : (305)871-1530 . Fax : (305)871-1531
EB-0006719
WALTER A. TILLIT Jr., P. E.
FLORIDA Lic. # 44167

40 mm SLAT ROLL-UP SHUTTER

ROLLINGSHIELD, INC.
8900 N.W. 119 STREET
HIALEAH, FLORIDA 33018

REV. No	DESCRIPTION	DATE	REV. No	DESCRIPTION	DATE
1	GENERAL	4/25/01	3		
2	–	–	4		

AS SHOWN
SCALE

1/14/00
DATE

00-11
DRAWING No

SHEET 12 OF 16

STORM BAR LOADING CHART

MAXIMUM DESIGN PRESSURE RATING "W" (p. s. f.) AND CORRESPONDING MAXIMUM SPAN "L" FOR A GIVEN TYPE OF STORM BAR AND STORM BAR SPACING.

(USE NEGATIVE PRESSURE VALUES AS PER ASCE 7-88)

MAX. SPAN FOR STORM BARS W/REGULAR CONCRETE ANCHORS

MAXIMUM DESIGN LOAD "W" (p.s.f.)	TYPE 1 STORM BAR 2" x 2" x .188"		TYPE 2 STORM BAR 2" x 3" x .125"		TYPE 3 STORM BAR 2" x 4" x .125"	
	STORM BAR SPACING *		STORM BAR SPACING *		STORM BAR SPACING *	
	≤ 3'-0"	3' TO 4'	≤ 3'-0"	3' TO 4'	≤ 3'-0"	3' TO 4'
40	6'-0"	6'-0"	8'-0"	8'-0"	10'-0"	9'-6"
45	6'-0"	6'-0"	8'-0"	7'-9"	10'-0"	9'-3"
50	6'-0"	6'-0"	8'-0"	7'-7"	9'-8"	9'-0"
55	6'-0"	6'-0"	7'-11"	7'-5"	9'-6"	8'-10"
60	6'-0"	6'-0"	7'-9"	7'-3"	9'-3"	8'-7"
65	6'-0"	6'-0"	7'-7"	7'-1"	9'-1"	8'-5"
70	6'-0"	5'-11"	7'-6"	6'-10"	8'-11"	8'-3"
75	6'-0"	5'-9"	7'-4"	6'-7"	8'-9"	8'-1"
80	6'-0"	5'-7"	7'-3"	6'-5'	8'-7"	7'-10"
85	6'-0"	5'-5"	7'-1"	6'-2"	8'-6"	7'-7"
90	5'-11"	5'-3"	6'-11"	6'-0"	8'-4"	7'-5"
95	5'-10"	5'-2"	6'-9"	5'-10"	8'-3"	7'-2"
100	5'-9"	5'-0"	6'-7"	5'-9"	8'-1"	7'-0"
105	5'-8'	4'-11"	6'-5"	5'-7"	7'-11"	6'-10"
110	5'-6"	4'-9"	6'-3"	5'-5"	7'-8"	6'-8"
115	5'-5"	4'-8"	6'-2"	5'-4"	7'-6"	6'-6"
120	5'-3"	4'-7"	6'-0"	5'-3"	7'-5"	6'-5"
125	5'-2"	4'-6"	5'-11"	5'-1"	7'-3"	6'-3"
130	5'-1"	4'-5"	5'-9"	5'-0"	7'-1"	6'-2"
135	5'-0"	4'-4"	5'-8"	4'-11"	6'-11"	6'-0"
140	4'-11"	4'-3"	5'-7"	4'-10"	6'-10"	5'-11"
145	4'-10"	4'-2"	5'-6"	4'-9"	6'-9"	5'-10"
150	4'-9"	4'-1"	5'-5"	4'-8"	6'-7"	5'-9"
155	4'-8"	4'-0"	5'-4"	4'-7"	6'-6"	5'-7"
160	4'-7"	3'-11"	5'-3"	4'-6"	6'-5"	5'-6"

* STORM BAR SPACING SHALL BE SUCH THAT MAXIMUM SLAT SPAN SHALL NOT BE EXCEEDED.

MAX. SPAN FOR STORM BARS W/SPRING-LOADED SYSTEM

MAXIMUM DESIGN LOAD "W" (p.s.f.)	TYPE 1 STORM BAR 2" x 2" x .188"		TYPE 2 STORM BAR 2" x 3" x .125"		TYPE 3 STORM BAR 2" x 4" x .125"	
	STORM BAR SPACING *		STORM BAR SPACING *		STORM BAR SPACING *	
	≤ 3'-0"	3' TO 4'	≤ 3'-0"	3' TO 4'	≤ 3'-0"	3' TO 4'
40	4'-5"	3'-4"	8'-0"	6'-0"	10'-0"	7'-9"
45	3'-11"	3'-0"	7'-1"	5'-4"	9'-2"	6'-11"
50	3'-7"	2'-8"	6'-5"	4'-10"	8'-3"	6'-2"
55	3'-3"	2'-5"	5'-10"	4'-4"	7'-6"	5'-8"
60	3'-0"	2'-3"	5'-4"	4'-0"	6'-11"	5'-2"
65	2'-9"	2'-1"	4'-11"	3'-8"	6'-4"	4'-9"
70	2'-6"	1'-11"	4'-7"	3'-5"	5'-11"	4'-5"
75	2'-4"	1'-9"	4'-3"	3'-2"	5'-6"	4'-1"

APPROVED AS COMPLYING WITH THE SOUTH FLORIDA BUILDING CODE
DATE JUN 07 2001
BY
PRODUCT CONTROL DIVISION
BUILDING CODE COMPLIANCE OFFICE
ACCEPTANCE NO. 00-0822.02
MIAMI-DADE COUNTY

5/4/01

TILTECO INC.
TILLIT TESTING & ENGINEERING COMPANY
8595 N.W. 38th. St., Ste. 217 - VIRGINIA GARDENS, FL 33166
Phone : (305)871-1530 . Fax : (305)871-1531
EB-0006719
WALTER A. TILLIT Jr., P. E.
FLORIDA Lic. # 44167

40 mm SLAT ROLL-UP SHUTTER

ROLLINGSHIELD, INC.
8900 N.W. 119 STREET
HIALEAH, FLORIDA 33018

REV. No	DESCRIPTION	DATE	REV. No	DESCRIPTION	DATE
1	GENERAL	4/25/01	3		
2	-	-	4		

AS SHOWN
SCALE

1/14/00
DATE

00-11
DRAWING No

SHEET 13 OF 16

STORM BAR LOADING CHART

MAXIMUM DESIGN PRESSURE RATING "W" (p. s. f.) AND CORRESPONDING MAXIMUM SPAN "L" FOR A GIVEN TYPE OF STORM BAR AND STORM BAR SPACING.

(USE NEGATIVE PRESSURE VALUES AS PER ASCE 7-88)

MAX. SPAN FOR STORM BARS W/REGULAR CONCRETE ANCHORS

MAXIMUM DESIGN LOAD "W" (p.s.f.)	TYPE 4 STORM BAR 2" x 4" x .250"		TYPE 5 STORM BAR (2) 2" x 3" x .125"		TYPE 6 STORM BAR (2) 2" x 4" x .250"	
	STORM BAR SPACING *		STORM BAR SPACING *		STORM BAR SPACING *	
	≤ 3'-0"	3' TO 4'	≤ 3'-0"	3' TO 4'	≤ 3'-0"	3' TO 4'
40	11'-10"	11'-0"	10'-3"	9'-6"	14'-1"	13'-1"
45	11'-6"	10'-8"	9'-11"	9'-3"	13'-8"	12'-9"
50	11'-2"	10'-5"	9'-8"	9'-0"	13'-4"	12'-5"
55	10'-11"	10'-2"	9'-5"	8'-9"	13'-0"	12'-1"
60	10'-8"	10'-0"	9'-3"	8'-7"	12'-9"	11'-10"
65	10'-6"	9'-9"	9'-1"	8'-5"	12'-6"	11'-7"
70	10'-4"	9'-7"	8'-11"	8'-3"	12'-3"	11'-5"
75	10'-1"	9'-5"	8'-9"	8'-1"	12'-0"	11'-2"
80	9'-11"	9'-3"	8'-7"	8'-0"	11'-10"	11'-0"
85	9'-10"	9'-2"	8'-5"	7'-10"	11'-8"	10'-10"
90	9'-8"	9'-0"	8'-4"	7'-9"	11'-6"	10'-8"
95	9'-6"	8'-10"	8'-3"	7'-8"	11'-4"	10'-7"
100	9'-5"	8'-9"	8'-1"	7'-7"	11'-2"	10'-5"
105	9'-4"	8'-8"	8'-0"	7'-6"	11'-1"	10'-4"
110	9'-2"	8'-7"	7'-11"	7'-5"	10'-11"	10'-2"
115	9'-1"	8'-6"	7'-10"	7'-4"	10'-10"	10'-1"
120	9'-0"	8'-4"	7'-9"	7'-3"	10'-8"	9'-11"
125	8'-11"	8'-3"	7'-8"	7'-2"	10'-7"	9'-10"
130	8'-10"	8'-2"	7'-7"	7'-1"	10'-6"	9'-9"
135	8'-9"	8'-0"	7'-6"	6'-11"	10'-5"	9'-8"
140	8'-8"	7'-10"	7'-6"	6'-10"	10'-4"	9'-7"
145	8'-7"	7'-8"	7'-5"	6'-8"	10'-2"	9'-6"
150	8'-6"	7'-7"	7'-4"	6'-7"	10'-1"	9'-5"
155	8'-5"	7'-5"	7'-3"	6'-6"	10'-0"	9'-4"
160	8'-4"	7'-4"	7'-3"	6'-5"	9'-11"	9'-3"

* STORM BAR SPACING SHALL BE SUCH THAT MAXIMUM SLAT SPAN SHALL NOT BE EXCEEDED.

MAX. SPAN FOR STORM BARS W/SPRING-LOADED SYSTEM

MAXIMUM DESIGN LOAD "W" (p.s.f.)	TYPE 4 STORM BAR 2" x 4" x .250"		TYPE 5 STORM BAR (2) 2" x 3" x .125"		TYPE 6 STORM BAR (2) 2" x 4" x .250"	
	STORM BAR SPACING *		STORM BAR SPACING *		STORM BAR SPACING *	
	≤ 3'-0"	3' TO 4'	≤ 3'-0"	3' TO 4'	≤ 3'-0"	3' TO 4'
40	10'-4"	7'-9"	10'-3"	9'-6"	14'-1"	12'-1"
45	9'-2"	6'-11"	9'-11"	8'-11"	13'-8"	10'-8"
50	8'-3"	6'-2"	9'-8"	8'-0"	12'-10"	9'-8"
55	7'-6"	5'-8"	9'-5"	7'-3"	11'-8"	8'-9"
60	6'-11"	5'-2"	8'-11"	6'-8"	10'-8"	8'-0"
65	6'-4"	4'-9"	8'-2"	6'-2"	9'-11"	7'-5"
70	5'-11"	4'-5"	7'-7"	5'-9"	9'-2"	6'-11"
75	5'-6"	4'-1"	7'-1"	5'-4"	8'-7"	6'-5"

APPROVED AS COMPLYING WITH THE SOUTH FLORIDA BUILDING CODE
DATE JUN 07 2001
BY
PRODUCT CONTROL DIVISION
BUILDING CODE COMPLIANCE OFFICE
ACCEPTANCE NO. 00-0822.02

MIAMI-DADE COUNTY

5/2/01

TILTECO INC.
TILLIT TESTING & ENGINEERING COMPANY
6595 N.W. 36th. St., Ste. 217 - VIRGINIA GARDENS, FL 33166
Phone : (305)871-1530 . Fax : (305)871-1531
EB-0006719
WALTER A. TILLIT Jr., P. E.
FLORIDA Lic. # 44167

40 mm SLAT ROLL-UP SHUTTER

AS SHOWN SCALE

ROLLINGSHIELD, INC.
8900 N.W. 119 STREET
HIALEAH, FLORIDA 33018

1/14/00 DATE

00-11 DRAWING No

REV. No	DESCRIPTION	DATE	REV. No	DESCRIPTION	DATE
1	GENERAL	4/25/01	3		
2	-	-	4		

SHEET 14 OF 16

HEADER LOADING CHART

MAXIMUM NEGATIVE DESIGN PRESSURE RATING "W" (p. s. f.) AND CORRESPONDING MAXIMUM SPAN "L" FOR A GIVEN TYPE OF HEADER.

(USE NEGATIVE PRESSURE VALUES AS PER ASCE 7-88)

MAXIMUM DESIGN LOAD "W" (p.s.f.)	TYPE 1 HEADER 2" x 3" X .125"		TYPE 2 HEADER 2" x 4" X .125"		TYPE 3 HEADER 2" x 4" X .250"				
	STORM BAR HEIGHT		STORM BAR HEIGHT		STORM BAR HEIGHT				
	≤ 5'-0"	5' TO 7'	≤ 5'-0"	5' TO 8'	≤ 6'-0"	6' TO 8'	8' TO 10'	10' TO 12'	12' TO 14'
40.0	11'-4"	9'-8"	13'-6"	11'-2"	14'-11"	13'-10"	13'-1"	12'-2"	11'-3"
45.0	10'-9"	9'-1"	13'-1"	10'-6"	14'-5"	13'-5"	12'-6"	11'-5"	10'-7"
50.0	10'-3"	8'-8"	12'-7"	10'-0"	14'-1"	13'-1"	11'-11"	10'-10"	10'-1"
55.0	9'-9"	8'-3"	12'-0"	9'-6"	13'-9"	12'-8"	11'-4"	10'-4"	9'-7"
60.0	9'-4"	7'-11"	11'-6"	9'-1"	13'-5"	12'-2"	10'-10"	9'-11"	9'-2"
65.0	8'-11"	7'-7"	11'-1"	8'-9"	13'-2"	11'-8"	10'-5"	9'-6"	8'-10"
70.0	8'-8"	7'-4"	10'-8"	8'-5"	12'-11"	11'-3"	10'-1"	9'-2"	8'-6"
75.0	8'-4"	7'-1"	10'-3"	8'-2"	12'-6"	10'-10"	9'-9"	8'-10"	8'-3"
80.0	8'-1"	6'-10"	10'-0"	7'-10"	12'-2"	10'-6"	9'-5"	8'-7"	7'-11"
85.0	7'-10"	6'-7"	9'-8"	7'-8"	11'-9"	10'-2"	9'-1"	8'-4"	7'-9"
90.0	7'-7"	6'-5"	9'-5"	7'-5"	11'-5"	9'-11"	8'-10"	8'-1"	7'-6"
95.0	7'-5"	6'-3"	9'-2"	7'-3"	11'-2"	9'-8"	8'-8"	7'-11"	7'-4"
100.0	7'-3"	6'-1"	8'-11"	7'-1"	10'-10"	9'-5"	8'-5"	7'-8"	7'-1"
105.0	7'-1"	6'-0"	8'-8"	6'-10"	10'-7"	9'-2"	8'-3"	7'-6"	6'-11"
110.0	6'-11"	5'-10"	8'-6"	6'-9"	10'-4"	9'-0"	8'-0"	7'-4"	6'-9"
115.0	6'-9"	5'-8"	8'-4"	6'-7"	10'-2"	8'-9"	7'-10"	7'-2"	6'-8"
120.0	6'-7"	5'-7"	8'-2"	6'-5"	9'-11"	8'-7"	7'-8"	7'-0"	6'-6"
125.0	6'-6"	5'-5"	8'-0"	6'-4"	9'-9"	8'-5"	7'-6"	6'-10"	6'-4"
130.0	6'-4"	5'-4"	7'-10"	6'-2"	9'-6"	8'-3"	7'-5"	6'-9"	6'-3"
135.0	6'-3"	5'-3"	7'-8"	6'-1"	9'-4"	8'-1"	7'-3"	6'-7"	6'-1"
140.0	6'-1"	5'-2"	7'-6"	5'-11"	9'-2"	7'-11"	7'-1"	6'-6"	6'-0"
145.0	6'-0"	5'-1"	7'-5"	5'-10"	9'-0"	7'-10"	7'-0"	6'-5"	5'-11"
150.0	5'-11"	5'-0"	7'-3"	5'-9"	8'-10"	7'-8"	6'-10"	6'-3"	5'-10"
155.0	5'-10"	4'-11"	7'-2"	5'-8"	8'-9"	7'-7"	6'-9"	6'-2"	5'-9"
160.0	5'-9"	4'-10"	7'-1"	5'-7"	8'-7"	7'-5"	6'-8"	6'-1"	5'-7"

APPROVED AS COMPLYING WITH THE SOUTH FLORIDA BUILDING CODE
DATE JUN 07 2001
BY
PRODUCT CONTROL DIVISION
BUILDING CODE COMPLIANCE OFFICE
ACCEPTANCE NO. 00-0822.02
MIAMI-DADE COUNTY

5/4/01

TILTECO INC.
TILLIT TESTING & ENGINEERING COMPANY
8595 N.W. 36th. St., Ste. 217 – VIRGINIA GARDENS, FL 33166
Phone : (305)871-1530 . Fax : (305)871-1531
EB-0006719
WALTER A. TILLIT Jr., P. E.
FLORIDA Lic. # 44167

40 mm SLAT ROLL-UP SHUTTER

ROLLINGSHIELD, INC.
8900 N.W. 119 STREET
HIALEAH, FLORIDA 33018

REV. No	DESCRIPTION	DATE	REV. No	DESCRIPTION	DATE
1	GENERAL	4/25/01	3		
2	–	–	4		

AS SHOWN
SCALE
1/14/00
DATE
00-11
DRAWING No
SHEET 15 OF 16

MULLION LOADING CHART

MAXIMUM DESIGN PRESSURE RATING "W" (p. s. f.) AND CORRESPONDING MAXIMUM SPAN "L"(Ft) FOR A GIVEN TYPE OF MULLION AND MULLION SPACING (Ft.).

(USE NEGATIVE PRESSURE VALUES AS PER ASCE 7-88)

MAXIMUM DESIGN LOAD "W" (p.s.f.)	TYPE 1 MULLION 3" x 4" x .125"				TYPE 2 MULLION 4" x 4" x .250"				TYPE 3 MULLION 4" x 6" x .250"					
	MULLION SPACING				MULLION SPACING				MULLION SPACING					
	≤ 4'-0"	4' TO 5'	5' TO 6'	6' TO 8'	≤ 4'-0"	4' TO 5'	5' TO 6'	6' TO 8'	≤ 4'-0"	4' TO 5'	5' TO 6'	6' TO 8'	8' TO 10'	10' TO 12
40.0	9'-8"	8'-4"	7'-10"	8'-2"	11'-9"	10'-11"	10'-3"	10'-8"	16'-4"	15'-2"	14'-3"	14'-10"	13'-10"	13'-0"
45.0	8'-8"	8'-0"	7'-7"	7'-10"	11'-3"	10'-6"	9'-10"	10'-3"	15'-8"	14'-7"	13'-9"	14'-4"	13'-3"	12'-6"
50.0	8'-4"	7'-9"	7'-3"	7'-7"	10'-11"	10'-1"	9'-6"	9'-11"	15'-2"	14'-0"	13'-3"	13'-10"	12'-10"	12'-1"
55.0	8'-1"	7'-6"	7'-1"	7'-4"	10'-7"	9'-10"	9'-3"	9'-7"	14'-8"	13'-8"	12'-10"	13'-5"	12'-5"	11'-8"
60.0	7'-10"	7'-3"	6'-10"	7'-2"	10'-3"	9'-6"	8'-11"	9'-4"	14'-3"	13'-3"	12'-5"	13'-0"	12'-1"	11'-4"
65.0	7'-8"	7'-1"	6'-8"	7'-0"	10'-0"	9'-3"	8'-9"	9'-1"	13'-11"	12'-11"	12'-2"	12'-8"	11'-10"	11'-1"
70.0	7'-5"	6'-11"	6'-6"	6'-10"	9'-9"	9'-0"	8'-6"	8'-10"	13'-7"	12'-7"	11'-10"	12'-4"	11'-5"	10'-9"
75.0	7'-3"	6'-9"	6'-4"	6'-8"	9'-6"	8'-10"	8'-4"	8'-8"	13'-3"	12'-3"	11'-7"	12'-1"	11'-2"	10'-6"
80.0	7'-2"	6'-7"	6'-3"	6'-6"	9'-4"	8'-8"	8'-2"	8'-6"	12'-11"	12'-0"	11'-4"	11'-10"	11'-0"	10'-4"
85.0	7'-0"	6'-6"	6'-1"	6'-4"	9'-2"	8'-6"	8'-0"	8'-4"	12'-8"	11'-9"	11'-1"	11'-7"	10'-9"	10'-1"
90.0	6'-10"	6'-4"	6'-0"	6'-3"	8'-11"	8'-4"	7'-10"	8'-2"	12'-5"	11'-7"	10'-11"	11'-4"	10'-6"	9'-11"
95.0	6'-9"	6'-3"	5'-11"	6'-2"	8'-10"	8'-2"	7'-8"	8'-0"	12'-3"	11'-4"	10'-8"	11'-2"	10'-4"	9'-9"
100.0	6'-7"	6'-2"	5'-9"	6'-0"	8'-8"	8'-0"	7'-7"	7'-11"	12'-0"	11'-2"	10'-6"	11'-0"	10'-2"	9'-7"
105.0	6'-6"	6'-1"	5'-8"	5'-11"	8'-6"	7'-11"	7'-5"	7'-9"	11'-10"	11'-0"	10'-4"	10'-9"	–	–
110.0	6'-5"	5'-11"	5'-7"	5'-10"	8'-5"	7'-9"	7'-4"	7'-8"	11'-8"	10'-10"	10'-2"	10'-7"	–	–
115.0	6'-4"	5'-10"	5'-6"	5'-9"	8'-3"	7'-8"	7'-3"	7'-6"	11'-6"	10'-8"	10'-0"	10'-6"	–	–
120.0	6'-3"	5'-9"	5'-5"	5'-8"	8'-2"	7'-7"	7'-1"	7'-5"	11'-4"	10'-6"	9'-11"	10'-4"	–	–
125.0	6'-2"	5'-8"	5'-4"	5'-7"	8'-0"	7'-5"	7'-0"	7'-4"	11'-2"	10'-4"	9'-9"	10'-2"	–	–
130.0	6'-1"	5'-8"	5'-4"	5'-6"	7'-11"	7'-4"	6'-11"	7'-3"	11'-0"	10'-3"	9'-8"	10'-0"	–	–
135.0	6'-0"	5'-7"	5'-3"	5'-5"	7'-10"	7'-3"	6'-10"	7'-2"	10'-11"	10'-1"	9'-6"	9'-11"	–	–
140.0	5'-11"	5'-6"	5'-2"	5'-5"	7'-9"	7'-2"	6'-9"	7'-1"	10'-9"	10'-0"	9'-5"	9'-10"	–	–
145.0	5'-10"	5'-5"	5'-1"	5'-4"	7'-8"	7'-1"	6'-8"	7'-0"	10'-8"	9'-10"	9'-3"	9'-8"	–	–
150.0	5'-9"	5'-4"	5'-1"	5'-3"	7'-7"	7'-0"	6'-7"	6'-11"	10'-6"	9'-9"	9'-2"	9'-7"	–	–
155.0	5'-9"	5'-4"	5'-0"	5'-3"	7'-6"	6'-11"	6'-6"	6'-10"	10'-5"	9'-8"	9'-1"	9'-6"	–	–
160.0	5'-8"	5'-3"	4'-11"	5'-2"	7'-5"	6'-10"	6'-5"	6'-9"	10'-3"	9'-7"	9'-0"	9'-4"	–	–

NOTES : REFER TO ELEVATIONS ON SHEET 1 OF 16

1-. FOR MULLIONS INSTALLED W/O STORM BARS

A) MULLION SPACING SHALL BE SUCH THAT MAXIMUM SLAT SPAN SHALL NOT BE EXCEEDED

2-. FOR MULLIONS INSTALLED W/ STORM BARS & HEADERS

A) MULLION SPACING SHALL BE SUCH THAT MAXIMUM HEADER SPAN SHALL NOT BE EXCEEDED

B) STORM BAR SPACING SHALL BE SUCH THAT MAXIMUM SLAT SPAN SHALL NOT BE EXCEEDED

APPROVED AS COMPLYING WITH THE SOUTH FLORIDA BUILDING CODE
DATE JUN 07 2001
BY
PRODUCT CONTROL DIVISION
BUILDING CODE COMPLIANCE OFFICE
ACCEPTANCE NO. 00-0822.02
MIAMI-DADE COUNTY

5/2/01

TILTECO INC.
TILLIT TESTING & ENGINEERING COMPANY
6595 N.W. 36th. St., Ste. 217 - VIRGINIA GARDENS, FL 33166
Phone : (305)871-1530 . Fax : (305)871-1531
EB-0006719
WALTER A. TILLIT Jr., P. E.
FLORIDA Lic. # 44167

40 mm SLAT ROLL-UP SHUTTER

ROLLINGSHIELD, INC.
8900 N.W. 119 STREET
HIALEAH, FLORIDA 33018

REV. No	DESCRIPTION	DATE	REV. No	DESCRIPTION	DATE
1	GENERAL	4/25/01	3		
2	–	–	4		

AS SHOWN
SCALE

1/14/00
DATE

00-11
DRAWING No