MIAMI-DADE COUNTY, FLORIDA
METRO-DADE FLAGLER BUILDING

BUILDING CODE COMPLIANCE OFFICE
METRO-DADE FLAGLER BUILDING
140 WEST FLAGLER STREET, SUITE 1603
MIAMI, FLORIDA 33130-1563
(305) 375-2901 FAX (305) 375-2908

CONTRACTOR LICENSING SECTION
(305) 375-2527 FAX (305) 375-2558

CONTRACTOR ENFORCEMENT DIVISION
(305) 375-2966 FAX (305) 375-2908

PRODUCT CONTROL DIVISION
(305) 375-2902 FAX (305) 372-6339

PRODUCT CONTROL NOTICE OF ACCEPTANCE

Rib Roof Inc.
570 Morrison Road Post Office Box 40
Roseville ,TN 38066

Your application for Notice of Acceptance (NOA) of:
"Rib Roof" Structural Standing Seam Roof Panel
under Chapter 8 of the Code of Miami-Dade County governing the use of Alternate Materials and Types of Construction, and completely described herein, has been recommended for acceptance by the Miami-Dade County Building Code Compliance Office (BCCO) under the conditions specified herein.

This NOA shall not be valid after the expiration date stated below. BCCO reserves the right to secure this product or material at any time from a jobsite or manufacturer's plant for quality control testing. If this product or material fails to perform in the approved manner, BCCO may revoke, modify, or suspend the use of such product or material immediately. BCCO reserves the right to revoke this approval, if it is determined by BCCO that this product or material fails to meet the requirements of the South Florida Building Code.

The expense of such testing will be incurred by the manufacturer.

ACCEPTANCE NO.: 00-0830.05
EXPIRES: 12/26/2003

Raul Rodriguez
Chief Product Control Division

THIS IS THE COVERSHEET, SEE ADDITIONAL PAGES FOR SPECIFIC AND GENERAL CONDITIONS
BUILDING CODE & PRODUCT REVIEW COMMITTEE

This application for Product Approval has been reviewed by the BCCO and approved by the Building Code and Product Review Committee to be used in Miami-Dade County, Florida under the conditions set forth above.

Francisco J. Quintana, R.A.
Director
Miami-Dade County
Building Code Compliance Office

APPROVED: 11/02/2000

Rib Roof Metal Systems, Inc.

ACCEPTANCE No. : 00-0830.05

APPROVED : NOV 0 2 2000

EXPIRES : 12/26/2003

NOTICE OF ACCEPTANCE: SPECIFIC CONDITIONS

System Description

Rib Roof, Inc. is a manufacturer of structural metal roofing systems. Rib Roof produces one distinct, structural metal roofing profile for use in the South Florida jurisdiction; the "Rib Roof" profile. The "Rib Roof" panel profile is fabricated from formed, galvanized, coated, pre-painted steel and is designed for installation over optional glass fiber insulation and steel purlins. Standard flashing and trim pieces are available.

Rib Roof, Inc. roofing systems noted in this approval have been tested in compliance with the South Florida Building Code requirements for structural metal roofing applications. The minimum roof slope for Rib Roof shall be 1/4":12". See "Profile Drawings" in this approval for the "Rib Roof" panel profile.

Contact: Thomas E. Patrick
Rib Roof, Inc.
570 Morrison Road
Rossville, TN 38066
(901) 853-9062

System Trade Names:

Rib Roof, Inc.

The "Rib Roof" Profile

Helmy A. Makar, P.E. - Product Control Examiner
Product Control Division

Rib Roof Metal Systems, Inc.

ACCEPTANCE No. : **00-0830.05**

APPROVED : NOV 0 2 2000

EXPIRES : **12/26/2003**

NOTICE OF ACCEPTANCE: SPECIFIC CONDITIONS

Trade Named of Products Manufactured or Labeled By Applicant

Product	Dimensions	Test Specifications	Product Description
Rib Roof Panels	1 = various w = 18" min. 24 gage (panels are cut to appropriate length)	PA 110 (Section 20)	Corrosion resistant, galvanized, formed, standing seam, coated, pre-painted, metal panels.
Rib Roof / Clip	1½" high x 2½" wide x 8" long x 18 ga.	PA 114 Appendix E	Corrosion resistant, one-piece, individual clips for attachment of Rib Roof metal panels.
Trim Pieces	1 = varies w = varies min. 24 ga.	PA 110 (Section 20)	Standard flashing and trim pieces.

Helmy A. Makar, P.E. - Product Control Examiner
Product Control Division

Rib Roof Metal Systems, Inc.

ACCEPTANCE No. : **00-0830.05**

APPROVED : NOV 0 2 2000

EXPIRES : **12/26/2003**

NOTICE OF ACCEPTANCE: SPECIFIC CONDITIONS

TRADE NAMES OF PRODUCTS MANUFACTURED BY OTHERS

Product	Dimensions	Test Specifications	Product Description	Manufacturer
Fasteners (Clip Attachment to Steel Purlins)	min. #12-14 min. 1½" long	PA 114 Appendix E	Corrosion resistant, self- drilling, self-tapering, wafer-head with a square or phillips head drive.	generic
Insulation (Optional)	Max. 4" thick	PA 110 Section 11	Compressible, blanket type, fiberglass insulation	generic

Helmy A. Makar, P.E. - Product Control Examiner
Product Control Division

Rib Roof Metal Systems, Inc.

ACCEPTANCE No. : 00-0830.05

APPROVED : NOV 0 2 2000

EXPIRES : 12/26/2003

NOTICE OF ACCEPTANCE: SPECIFIC CONDITIONS

TEST REPORTS

Test Agency	Test Identifier	Test Name/Report	Date
Underwriters Laboratories, Inc.	File R10034-9 Project 91NK17128	Uplift Pressure Testing UL 580	Jan. 1992
The Center for Applied Engineering, Inc.	Project No. 307026 Test #MDC-80	Wind Driven Rain PA 100	Nov. 1994
Underwriters Laboratories, Inc.	Letter Dated 11/29/94 Re: R10034/94NK40585	Fire Resistance ASTM E 108 Class 'A'	Nov. 1994
Miami Testing Laboratory, Inc.	File No. 94-1242 Report No. 2	Impact Testing PA 201 (as amended in PA 125)	Dec. 1994
Lilly Industries, Inc.	Internal Testing	Physical Properties ASTM G 23 & ASTM B 117	Jan. 1994

Helmy A. Makar, P.E. - Product Control Examiner
Product Control Division

Rib Roof Metal Systems, Inc.

ACCEPTANCE No. : 00-0830.05

APPROVED : NOV 0 2 2000

EXPIRES : 12/26/2003

NOTICE OF ACCEPTANCE: SPECIFIC CONDITIONS

SYSTEMS

SYSTEM A-1: Rib Roof with Rib Roof Clips.
Deck Type: Non-insulated or Insulated.
Deck Description: N/A
Slope Range: 1/4": 12" or greater.
Maximum Uplift Pressure: The maximum allowable uplift pressure for System A-1 shall be -42 psf. (See System Limitation #2).
UL Construction No. 204

Construction No. 204

Uplift-Class 90 or 60 (See Item No. 5) **Fire Not Investigated**

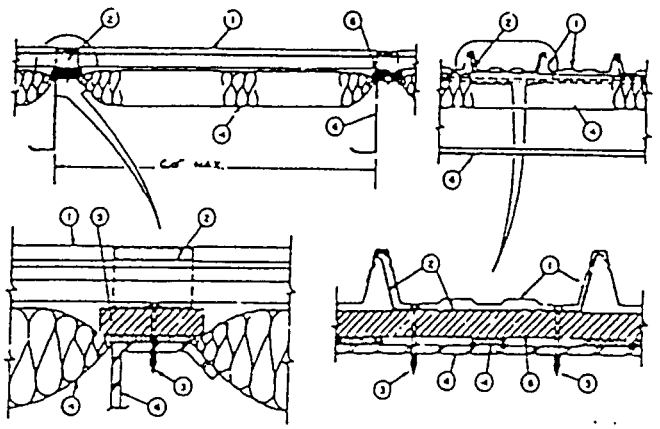

1. Metal Roof Deck Panels*—No. 24 MSG min gauge coated steel. Panels continuous over two or more spans end laps to occur over purlins with panels over lapped 12 in. An end lap plate (Item No. 8) to be used over end lap; located between ribs in both flat areas, 1/2 in. from exposedd edge. A bead of sealant may be used at side joints and end laps.
   Rib-Roof Industries, Inc. "Rib-Roof"
   HCI Steel Products "Weather-Span"
2. Roof Deck Fasteners*—(Panel clips)—One piece assembly, 2 1/2 in. wide 8 in. long at base. 1-1/2 in. high. Fabricated from No. 18 MSG min thickness coated steel.
   Rib-Roof Industries, Inc. "Rib-Roof/Clip"
   HCI Steel Products "Weather-Span"
3. Fasteners—(Screws)—For panel clip-to-purlin attachment, to be No. 12-14 self-drilling, self-tapping, wafer-head with a square or phillips head drive. Length to be 1-1/2 in. long when thermal spacers are not used and 2 in. when the thermal spacers are used. Fasteners to be inserted into outer most guide holes.
4. Insulation—(Optional)—Any compressible blanket type, 4 in. max thickness before compression.
5. Thermal Block—(Optional)—Not used in Class 90 assemblies—Used over purlins, 1 in. thick, 3 in. wide with a min density of 1.6 lb per cubic ft.
6. Purlins—No 16 MSG min thickness (50,000 psi min yield strength). Purlin spacing 5 ft. 0 in. OC.
7. Lateral Bracing—Not shown—As required.
8. End Lap Plate—(Not shown)—Located over panels at end laps, 3 in. wide, 8 in. long fabricated from No. 18 MSG coated steel. (min yield strength 33,000 psi.)

Refer to General Information, Roof Deck Constructions (Building Materials Directory) for items not evaluated.

*Bearing the UL Classification Marking

Helmy A. Makar, P.E. - Product Control Examiner
Product Control Division

NOTICE OF ACCEPTANCE: SPECIFIC CONDITIONS

Systems-Continued

SYSTEM A-1 (Continued)

Comments:

1. Flashings, penetrations, valley construction and other details shall be constructed in compliance with the minimum requirements provided in Dade County Application Standard PA 133.

2. "Rib Roof Panels" and "Rib Roof Clips" shall bear the UL Classification Marking.

3. Only the Class 90 attachment configuration noted above may be utilized; therefore, Item No. 5 (Thermal Block) shall not be installed.

4. Panel deflection shall be in compliance with the provisions set forth in Chapter 23 of the South Florida Building Code.

Helmy A. Makar, P.E. - Product Control Examiner
Product Control Division

Rib Roof Metal Systems, Inc.

ACCEPTANCE No. : 00-0830.05

APPROVED : NOV 0 2 2000

EXPIRES : 12/26/2003

NOTICE OF ACCEPTANCE: SPECIFIC CONDITIONS

SYSTEM LIMITATIONS

1. The standard minimum roof pitch for Rib Roof, Inc. structural metal roofing applications is 1/4" rise in 12" run (1/4": 12").

2. System installation shall be in compliance with the system specifications outlined in this Product Control Approval. The maximum uplift pressure noted for each system shall meet or exceed the design pressures for the field, perimeter and corner areas determined in compliance with Chapter 23 of the South Florida Building Code. Increased design pressures at perimeter and corner areas may be met through rational analysis by increasing number of attachment points in these areas. All rational analysis computations shall be conducted, signed and sealed by a Florida registered Professional Engineer.

3. All panels shall bear the imprint or identifiable marking of the manufacturer's name or logo for identification in the field. All Underwriters Laboratories Classified panels and clips shall bear the UL Classification Marking.

4. Applications for roofing permits shall include a completed Section II of the Uniform Building Permit, a copy of Rib Roof's current specifications and details and a copy of this Product Control Approval. Reference shall be made to appropriate data for the required fire rating. If increased design pressures at perimeter and corner areas are met through rational analysis, a copy of the signed and sealed computations shall be provided with the building permit application for design review.

5. The applicant shall retain the services of a Dade County certified testing laboratory to maintain quality control in compliance with the South Florida Building Code and related protocols with specific reference to Section 20 of Dade County Protocol PA 110.

6. Any Amendments to these provisions shall be in compliance with Sections 203 and 204 of the South Florida Building Code.

Helmy A. Makar, P.E. - Product Control Examiner
Product Control Division

Rib Roof Metal Systems, Inc.

ACCEPTANCE No. : 00-0830.05

APPROVED : NOV 0 2 2000

EXPIRES : 12/26/2003

NOTICE OF ACCEPTANCE: SPECIFIC CONDITIONS

PROFILE DRAWINGS

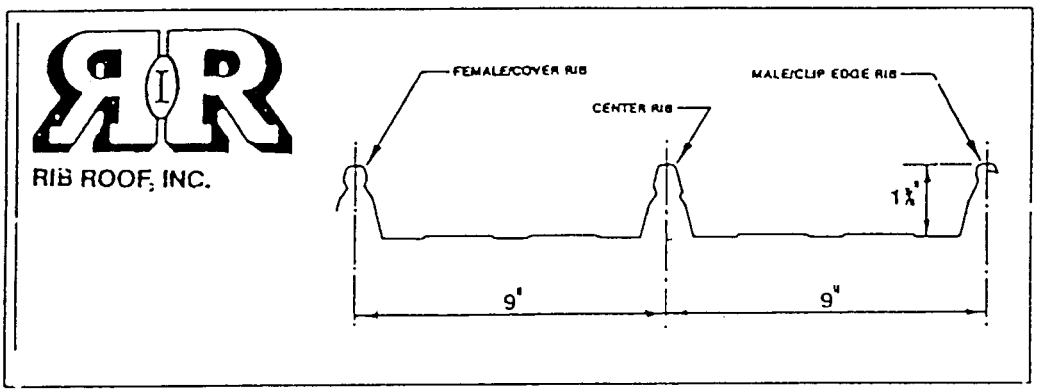

RIB ROOF PANEL

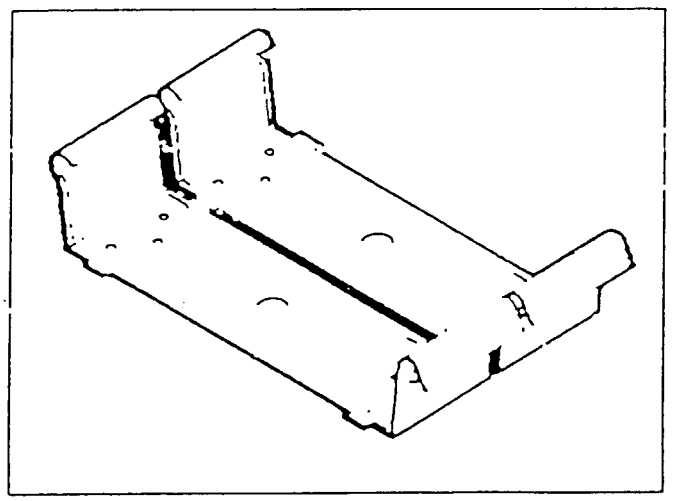

RIB ROOF CLIP

Helmy A. Makar, P.E. - Product Control Examiner
Product Control Division

Rib Roof Metal Systems, Inc.

ACCEPTANCE No. : 00-0830.05

APPROVED : NOV 0 2 2000

EXPIRES : 12/26/2003

NOTICE OF ACCEPTANCE: STANDARD CONDITIONS

1 Renewal of this Acceptance (approval) shall be considered after a renewal application has been filed and the original submitted documents, including test-supporting data, engineering documents, are no older than eight (8) years.

2. Any and all approved products shall be permanently labeled with the manufacturer's name, city, state, and the following statement: "Miami-Dade County Product Control Approved", or as specifically stated in the specific conditions of this Acceptance.

3. Renewals of Acceptance will not be considered if:
   a. There has been a change in the South Florida Building Code affecting the evaluation of this product and the product is not in compliance with the code changes.
   b. The product is no longer the same product (identical) as the one originally approved.
   c. If the Acceptance holder has not complied with all the requirements of this acceptance, including the correct installation of the product.
   d. The engineer, who originally prepared, signed and sealed the required documentation initially submitted, is no longer practicing the engineering profession.

4. Any revision or change in the materials, use, and/or manufacture of the product or process shall automatically be cause for termination of this Acceptance, unless prior written approval has been requested (through the filing of a revision application with appropriate fee) and granted by this office.

5. Any of the following shall also be grounds for removal of this Acceptance:
   a. Unsatisfactory performance of this product or process.
   b. Misuse of this Acceptance as an endorsement of any product, for sales, advertising or any other purposes.

6. The Notice of Acceptance number preceded by the words Miami-Dade County, Florida, and followed by the expiration date may be displayed in advertising literature. If any portion of the Notice of Acceptance is displayed, then it shall be done in its entirety.

7. A copy of this Acceptance as well as approved drawings and other documents, where it applies, shall be provided to the user by the manufacturer or its distributors and shall be available for inspection at the job site at all times. The engineer needs not reseal the copies.

8. Failure to comply with any section of this Acceptance shall be cause for termination and removal of Acceptance.

9. This Notice of Acceptance consists of pages 1, 2, 3, 4, 5, 6, 7, 8, 9, and this last page 10.

END OF THIS ACCEPTANCE

Helmy A. Makar, P.E. - Product Control Examiner
Product Control Division