MIAMI-DADE

MIAMI-DADE COUNTY, FLORIDA
METRO-DADE FLAGLER BUILDING

BUILDING CODE COMPLIANCE OFFICE
METRO-DADE FLAGLER BUILDING
140 WEST FLAGLER STREET, SUITE 1603
MIAMI, FLORIDA 33130-1563
(305) 375-2901 FAX (305) 375-2908

CONTRACTOR LICENSING SECTION
(305) 375-2527 FAX (305) 375-2558

CONTRACTOR ENFORCEMENT DIVISION
(305) 375-2966 FAX (305) 375-2908

PRODUCT CONTROL DIVISION
(305) 375-2902 FAX (305) 372-6339

PRODUCT CONTROL NOTICE OF ACCEPTANCE

Eagle Window & Door, Inc.
375 East Ninth Street P.O. Box 1072
Dubuque ,IA 52004-1072

Your application for Notice of Acceptance (NOA) of:
"Auxiliary Direct Set" Aluminum Clad Wood Fixed Window
under Chapter 8 of the Code of Miami-Dade County governing the use of Alternate Materials and Types of Construction, and completely described herein, has been recommended for acceptance by the Miami-Dade County Building Code Compliance Office (BCCO) under the conditions specified herein.

This NOA shall not be valid after the expiration date stated below. BCCO reserves the right to secure this product or material at any time from a jobsite or manufacturer's plant for quality control testing. If this product or material fails to perform in the approved manner, BCCO may revoke, modify, or suspend the use of such product or material immediately. BCCO reserves the right to revoke this approval, if it is determined by BCCO that this product or material fails to meet the requirements of the South Florida Building Code.

The expense of such testing will be incurred by the manufacturer.

ACCEPTANCE NO.: 00-0908.04
EXPIRES: 02/27/2003

Raul Rodriguez
Chief Product Control Division

THIS IS THE COVERSHEET, SEE ADDITIONAL PAGES FOR SPECIFIC AND GENERAL CONDITIONS
BUILDING CODE & PRODUCT REVIEW COMMITTEE

This application for Product Approval has been reviewed by the BCCO and approved by the Building Code and Product Review Committee to be used in Miami-Dade County, Florida under the conditions set forth above.

Francisco J. Quintana, R.A.
Director
Miami-Dade County
Building Code Compliance Office

APPROVED: 10/19/2000

Eagle Window & Door, Inc.

ACCEPTANCE No. : **00-0908.04**

APPROVED : OCT 1 9 2000

EXPIRES : **February 27, 2003**

NOTICE OF ACCEPTANCE: SPECIFIC CONDITIONS

1. SCOPE

1.1 This renews the Notice of Acceptance No. 96-0409.06 which was issued on February 27, 1997. It approves an aluminum clad wood fixed window, as described in Section 2 of this Notice of Acceptance, designed to comply with the South Florida Building Code, 1994 Edition for Miami-Dade County, for the locations where the pressure requirements, as determined by SFBC Chapter 23, do not exceed the Design Pressure Rating values indicated in the approved drawings.

2. PRODUCT DESCRIPTION

2.1 The **"Auxiliary Direct Set" Aluminum Clad Wood Fixed Window** and its components shall be constructed in strict compliance with the following documents: Drawing No.**D001**, titled "CLAD AUXILIARY UNIT," prepared by Eagle Window and Door, Inc., dated 1/15/97, Sheets 1 through 4 of 4, bearing the Miami-Dade County Product Control Approval and Renewal stamps with the Notice of Acceptance number and approval date by the Miami-Dade County Product Control Division. These documents shall hereinafter be referred to as the approved drawings.

3. LIMITATIONS

3.1 This approval applies to single unit applications only, as shown in approved drawings.

4. INSTALLATION

4.1 The aluminum clad wood fixed window and its components shall be installed in strict compliance with the approved drawings.

4.2 Hurricane protection system (shutters): the installation of this unit **will require** a hurricane protection system.

5. LABELING

5.1 Each unit shall bear a permanent label with the manufacturer's name or logo, city, state and following statement: "Miami-Dade County Product Control Approved".

6. BUILDING PERMIT REQUIREMENTS

6.1 Application for building permit shall be accompanied by copies of the following:

6.1.1 This Notice of Acceptance.

6.1.2 Duplicate copies of the approved drawings, as identified in Section 2 of this Notice of Acceptance, clearly marked to show the components selected for the proposed installation.

6.1.3 Any other documents required by the Building Official or the South Florida Building Code (SFBC) in order to properly evaluate the installation of this system.

Raul Rodriguez, Chief
Product Control Division

Eagle Window & Door, Inc.

ACCEPTANCE No. : 00-0908.04

APPROVED : OCT 1 9 2000

EXPIRES : February 27, 2003

NOTICE OF ACCEPTANCE: STANDARD CONDITIONS

1. Renewal of this Acceptance (approval) shall be considered after a renewal application has been filed and the original submitted documentation, including test supporting data, engineering documents, are no older than eight (8) years.

2. Any and all approved products shall be permanently labeled with the manufacturer's name, city, state, and the following statement: "Miami-Dade County Product Control Approved", or as specifically stated in the specific conditions of this Acceptance.

3. Renewals of Acceptance will not be considered if:
   a. There has been a change in the South Florida Building Code affecting the evaluation of this product and the product is not in compliance with the code changes.
   b. The product is no longer the same product (identical) as the one originally approved.
   c. If the Acceptance holder has not complied with all the requirements of this acceptance, including the correct installation of the product.
   d. The engineer who originally prepared, signed and sealed the required documentation initially submitted, is no longer practicing the engineering profession.

4. Any revision or change in the materials, use, and/or manufacture of the product or process shall automatically be cause for termination of this Acceptance, unless prior written approval has been requested (through the filing of a revision application with appropriate fee) and granted by this office.

5. Any of the following shall also be grounds for removal of this Acceptance:
   a. Unsatisfactory performance of this product or process.
   b. Misuse of this Acceptance as an endorsement of any product, for sales, advertising or any other purposes.

6. The Notice of Acceptance number preceded by the words Miami-Dade County, Florida, and followed by the expiration date may be displayed in advertising literature. If any portion of the Notice of Acceptance is displayed, then it shall be done in its entirety.

7. A copy of this Acceptance as well as approved drawings and other documents, where it applies, shall be provided to the user by the manufacturer or its distributors and shall be available for inspection at the job site at all time. The engineer needs not reseal the copies.

8. Failure to comply with any section of this Acceptance shall be cause for termination and removal of Acceptance.

9. This Notice of Acceptance consists of pages 1, 2 and this last page 3.

END OF THIS ACCEPTANCE

Raul Rodriguez, Chief
Product Control Division

BILL OF MATERIALS			
NO.	DESCRIPTION	MATERIAL	DIMENSION
1	DADE CO. PRODUCT CONTROL LABEL	METALLIC	.625" x 3.5"
2	FRAME - HEAD, SILL & SIDES	WOOD	3" x 9/16"
3	FRAME - HEAD, SILL & SIDES	ALUMINUM	1.938" x 1.500"
4	CORNER KEY	NYLON	1.247"x.672"x.488"
5	GLAZING STOP - INSULATED GLASS	WOOD	1.818" x .625"
6	GLAZING STOP - MONOLITHIC GLASS	WOOD	2.568" x .625"
7	INSULATED GLASS UNIT	SEVERAL	1" THICKNESS
8	MONOLITHIC GLASS	GLASS	.250" THICKNESS
9	NAILING FLANGE	VINYL	1.665"x.309"x.045"
10	INSTALLATION CLIP	STEEL	7" x 2" x .025"
11	ROOFING NAIL	STEEL	2"
12	PHILLIPS PAN HEAD SCREW	STEEL	#8 x 3/4"
13	PHILLIPS FLAT HEAD SCREW	STEEL	#10 x 2 1/2"

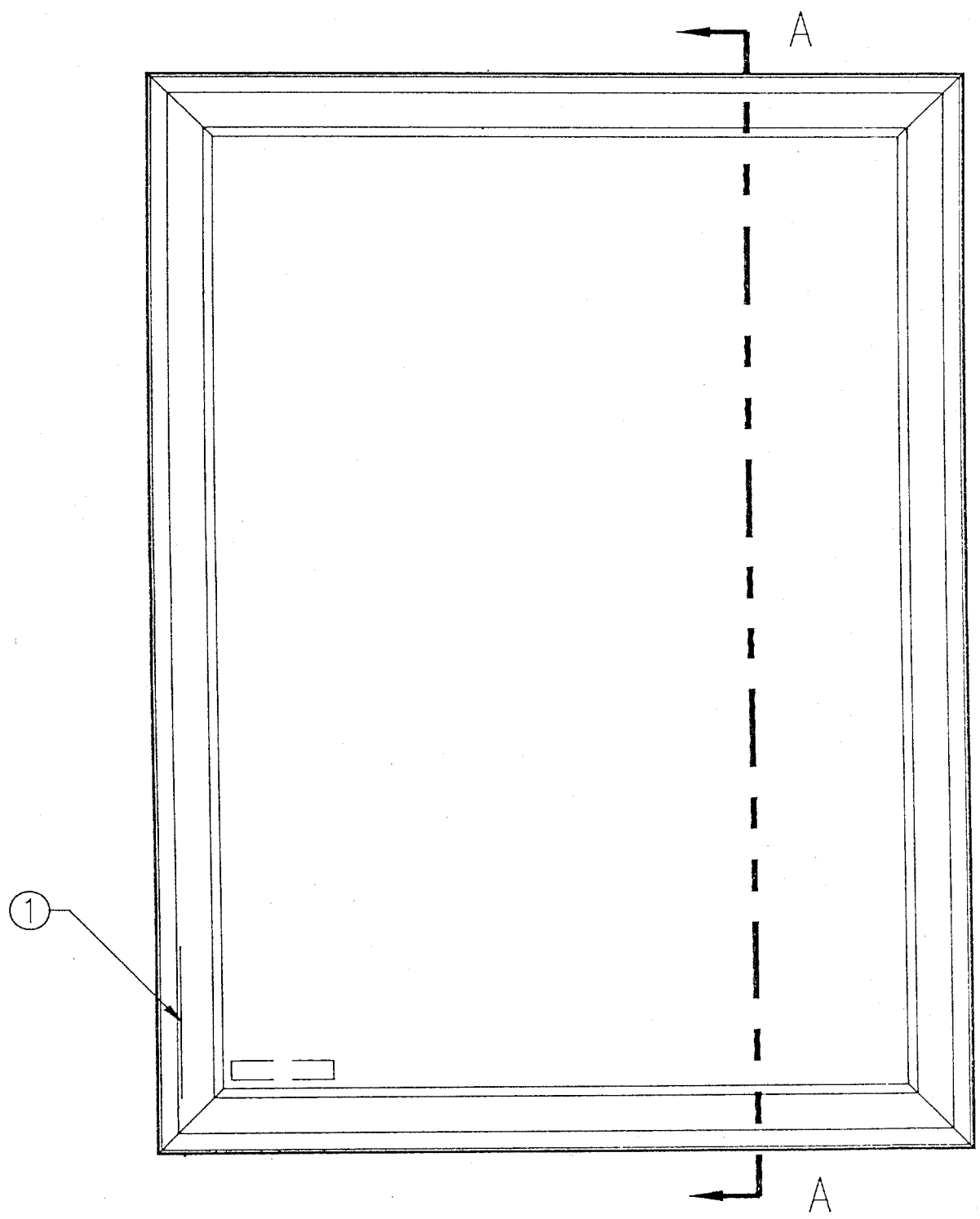

Design Pressure

+ 65.0 PSF

- 65.0 PSF

APPROVED AS COMPLYING WITH THE SOUTH FLORIDA BUILDING CODE
DATE FEBRUARY 27, 1997
BY [signature]
PRODUCT CONTROL DIVISION
BUILDING CODE COMPLIANCE OFFICE
ACCEPTANCE NO. 96-0409.06

PRODUCT RENEWED
ACCEPTANCE No. 00-0908.04
EXPIRATION DATE FEB. 27, 2003
By [signature]
PRODUCT CONTROL DIVISION
BUILDING CODE COMPLIANCE OFFICE

EAGLE WINDOW AND DOOR
375 E 9TH STREET
DUBUQUE IA, 52004-1072

TITLE: CLAD AUXILIARY UNIT

DRAWING NO: D001 | PAGE: 1 OF 4
DATE: 1-15-97 | DFT: TSB

NO	REVISION DESCRIPTION	DFT	DOC	DATE

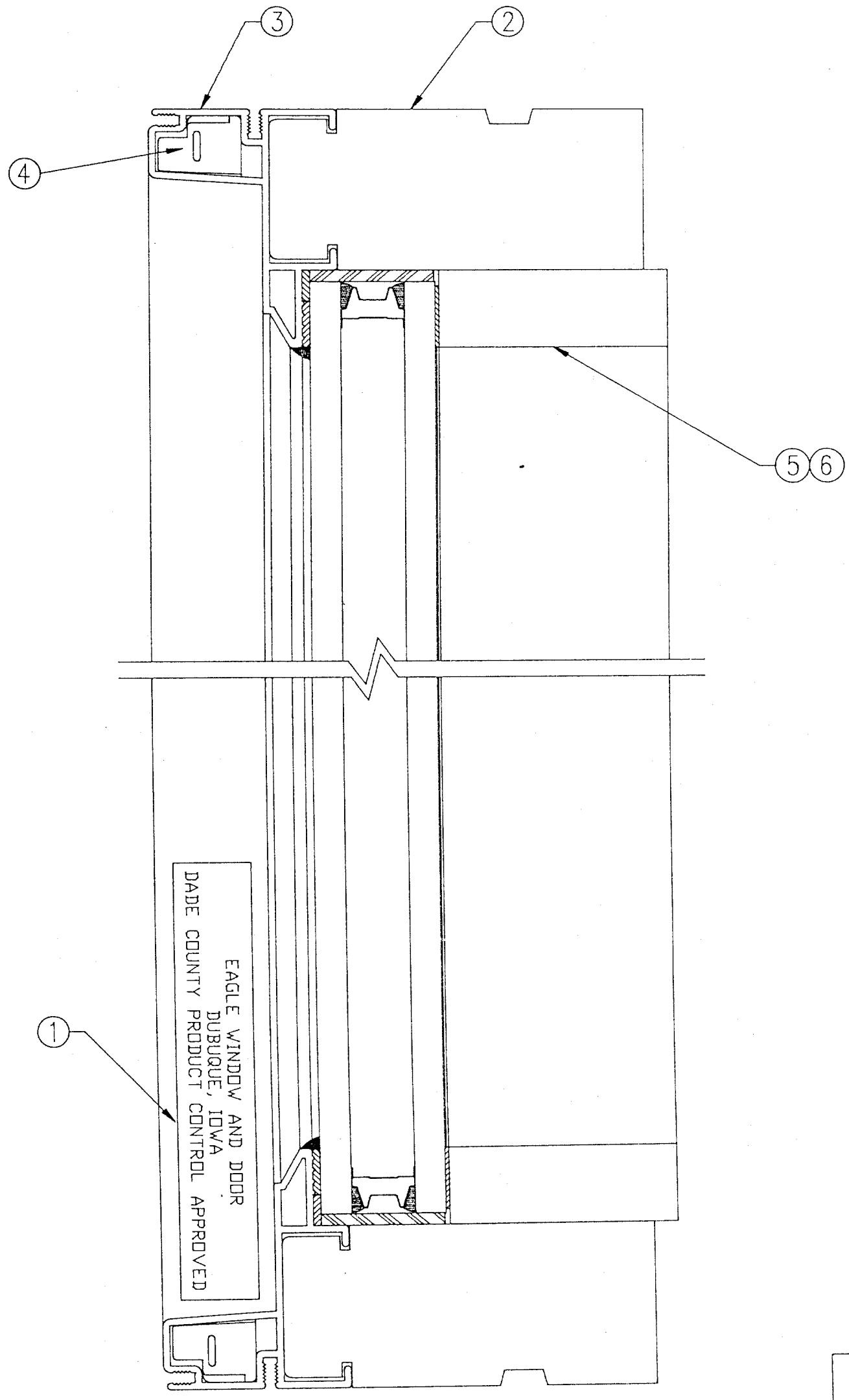

A-A

VERTICAL CROSS SECTION
SHOWN WITH INSULATED GLASS OPTION.

APPROVED AS COMPLYING WITH THE
SOUTH FLORIDA BUILDING CODE
DATE FEBRUARY 27 19 97
BY Manuel Perez
PRODUCT CONTROL DIVISION
BUILDING CODE COMPLIANCE OFFICE
ACCEPTANCE NO. 96-0409.06

PRODUCT RENEWED
ACCEPTANCE No. 00-0908.04
EXPIRATION DATE Feb. 27, 2003
By
PRODUCT CONTROL DIVISION
BUILDING CODE COMPLIANCE OFFICE

EAGLE WINDOW AND DOOR
375 E 9TH STREET
DUBUQUE IA, 52004-1072

TITLE: CLAD AUXILIARY UNIT

DRAWING NO: D001 | PAGE: 2 OF 4
DATE: 1-15-97 | DFT: TSB

NO	REVISION DESCRIPTION	DFT	DOC	DATE

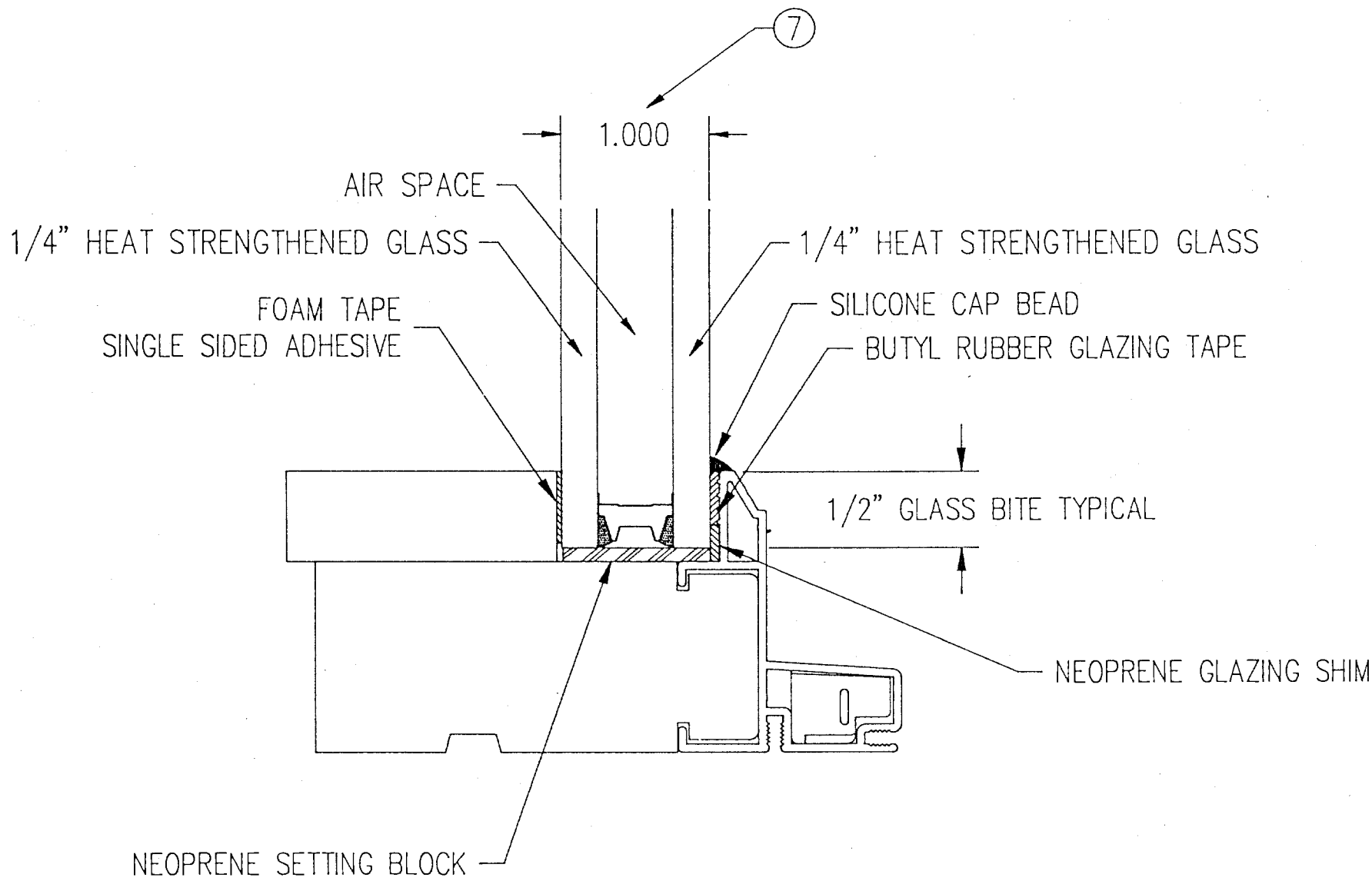

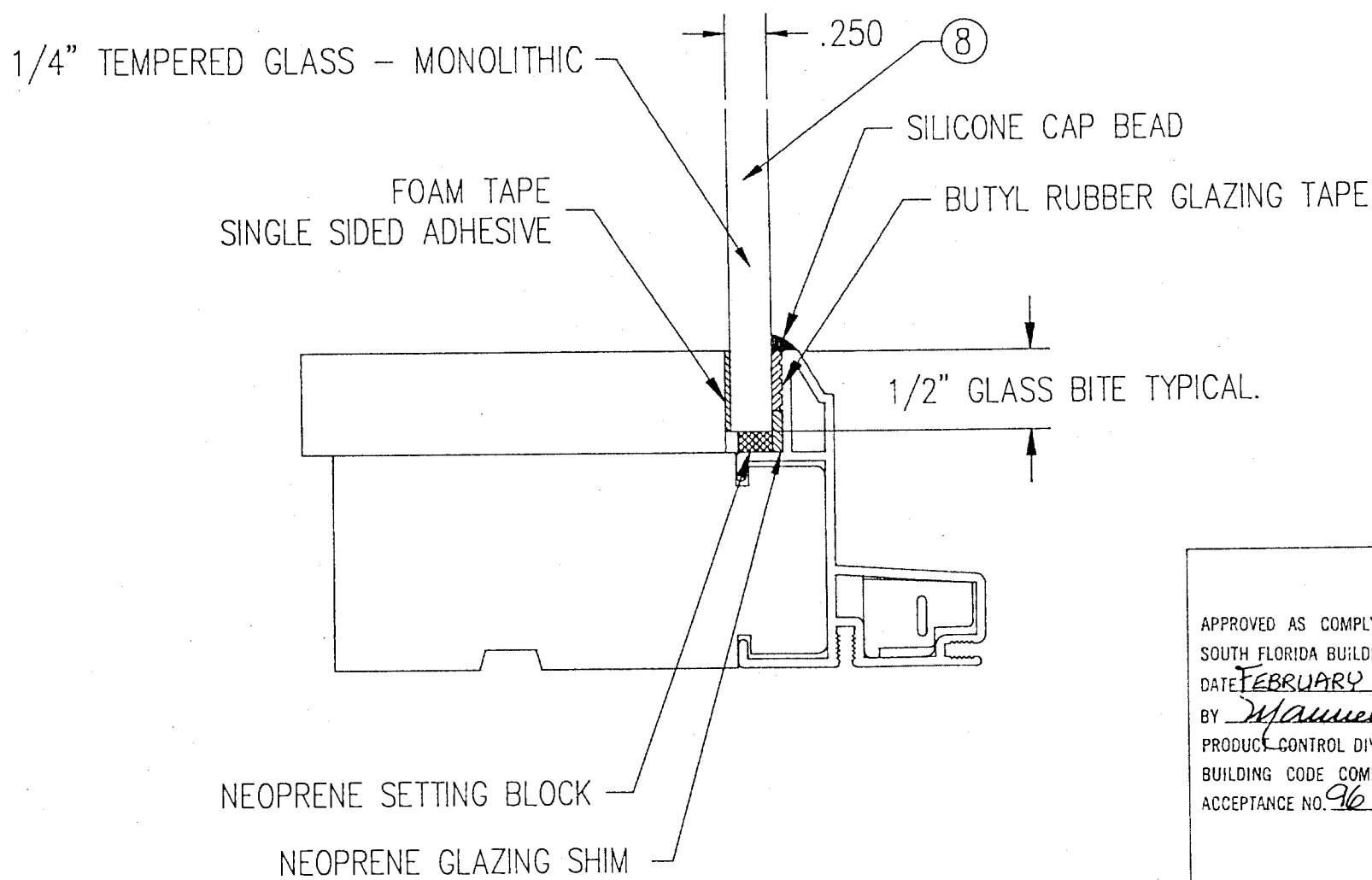

APPROVED AS COMPLYING WITH THE SOUTH FLORIDA BUILDING CODE
DATE FEBRUARY 27, 1997
BY Manuel Perez
PRODUCT CONTROL DIVISION
BUILDING CODE COMPLIANCE OFFICE
ACCEPTANCE NO. 96-0409.06

PRODUCT RENEWED
ACCEPTANCE No. 00-0908.04
EXPIRATION DATE FEB. 27, 2003
By
PRODUCT CONTROL DIVISION
BUILDING CODE COMPLIANCE OFFICE

EAGLE WINDOW AND DOOR
375 E 9TH STREET
DUBUQUE IA, 52004-1072

TITLE: CLAD AUXILIARY UNIT

DRAWING NO: D001 | PAGE: 3 OF 4
DATE: 1-15-97 | DFT: TSB

NO	REVISION DESCRIPTION	DFT	DOC	DATE

METHOD 1: NAILING FLANGE

Head Jamb – 2" roofing nails through each hole in nailing flange into framing (3 1/2" spacing).
Side Jambs – 2" roofing nails through each hole in nailing flange into framing (3 1/2" spacing).
Sill – 2" roofing nails through each hole in nailing flange into framing (3 1/2" spacing).

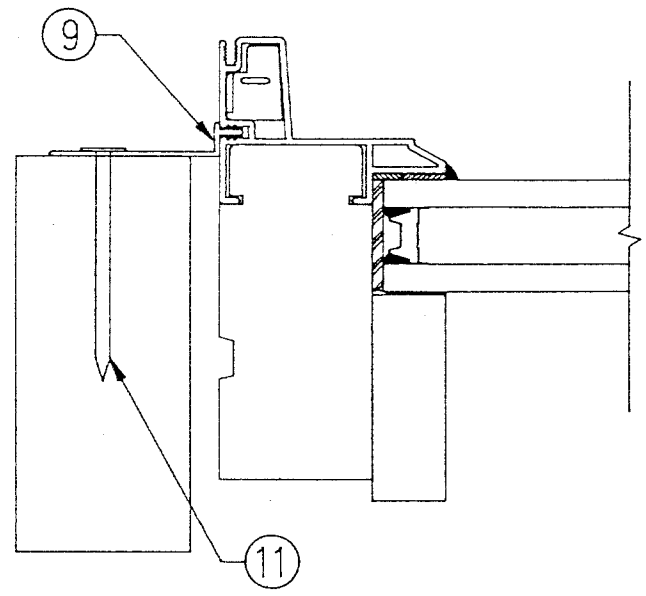

METHOD 2: INSTALLATION CLIPS

Each clip is fastened to the unit with (4) #8 x 3/4" Phillips pan head screws through the clip into the jamb, and (2) #8 x 3/4" Phillips pan head screws through the clip into the framing.

Head Jamb – .025" x 2" wide galvanized steel straps are located 4" from each corner, and spaced approximately 20" on center.
Side Jambs – .025" x 2" wide galvanized steel straps are located 4" from each corner, and spaced approximately 20" on center.
Sill – .025" x 2" wide galvanized steel straps are located 4" from
each corner, and spaced approximately 20" on center.

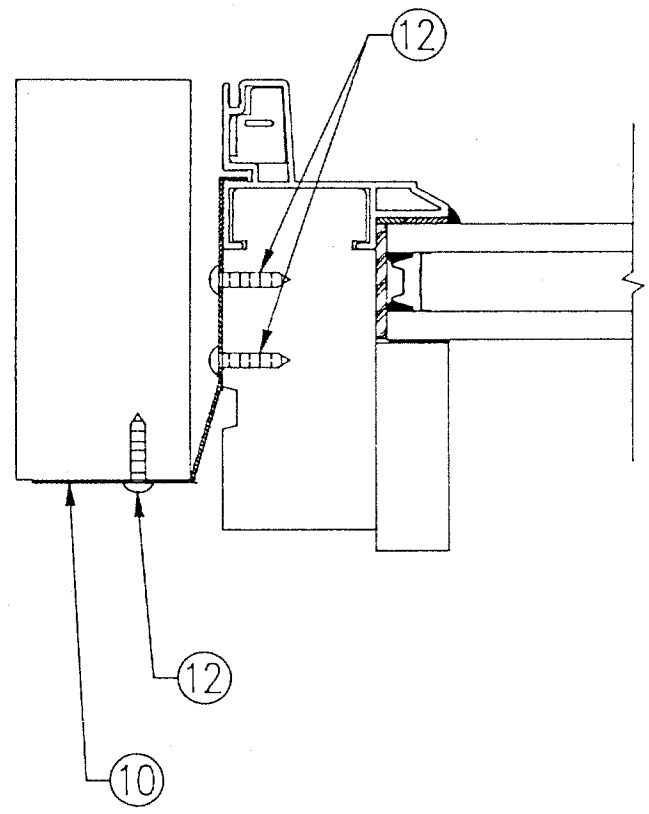

METHOD 3. FASTEN THROUGH JAMBS INTO FRAMING

Head Jamb – #10 X 2 1/2" PFH wood screws through jambs into framing, located 6" from corner of unit, spaced 7.5" on center.
Side Jambs – #10 X 2 1/2" PFH wood screws through jambs into framing, located 6" from corner of unit, spaced 7.5" on center.
Sill – #10 X 2 1/2" PFH wood screws through jambs into framing, located 6" from corner of unit, spaced 7.5" on center.

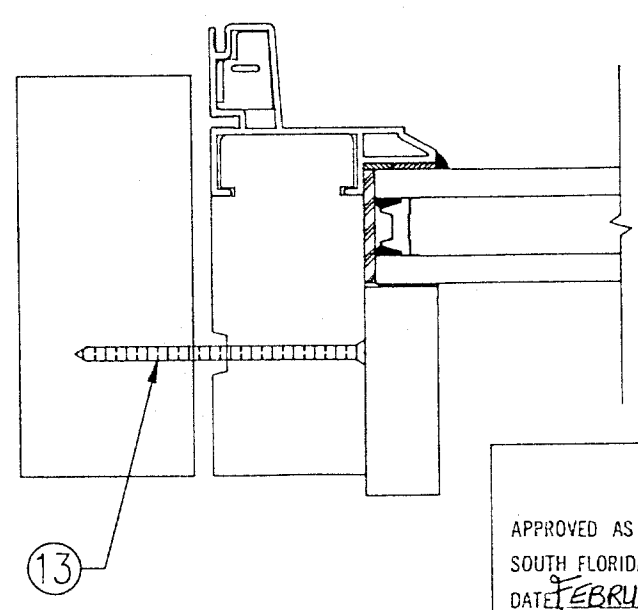

APPROVED AS COMPLYING WITH THE SOUTH FLORIDA BUILDING CODE
DATE FEBRUARY 27 1997
BY Manuel Sanz
PRODUCT CONTROL DIVISION
BUILDING CODE COMPLIANCE OFFICE
ACCEPTANCE NO. 96-0409.06

PRODUCT RENEWED
ACCEPTANCE No. 00-0908.04
EXPIRATION DATE Feb. 27, 2003
By
PRODUCT CONTROL DIVISION
BUILDING CODE COMPLIANCE OFFICE

EAGLE WINDOW AND DOOR
375 E 9TH STREET
DUBUQUE IA, 52004-1072

TITLE: CLAD AUXILIARY UNIT

NO	REVISION DESCRIPTION	DFT	DOC	DATE

DRAWING NO: D001 | PAGE: 4 OF 4
DATE: 1-15-97 | DFT: TSB