MIAMI-DADE

**MIAMI-DADE** COUNTY, FLORIDA
METRO-DADE FLAGLER BUILDING

**BUILDING CODE COMPLIANCE OFFICE**
METRO-DADE FLAGLER BUILDING
140 WEST FLAGLER STREET, SUITE 1603
MIAMI, FLORIDA 33130-1563
(305) 375-2901 FAX (305) 375-2908

**CONTRACTOR LICENSING SECTION**
(305) 375-2527 FAX (305) 375-2558

**CONTRACTOR ENFORCEMENT DIVISION**
(305) 375-2966 FAX (305) 375-2908

**PRODUCT CONTROL DIVISION**
(305) 375-2902 FAX (305) 372-6339

# PRODUCT CONTROL NOTICE OF ACCEPTANCE

**Jamerco, Inc.**
**18088 Cortney Court**
**City Of Industr ,CA 91748**

Your application for Notice of Acceptance (NOA) of:
**Jamerco Powder Actuated Fasteners**
under Chapter 8 of the Code of Miami-Dade County governing the use of Alternate Materials and Types of Construction, and completely described herein, has been recommended for acceptance by the Miami-Dade County Building Code Compliance Office (BCCO) under the conditions specified herein.

This NOA shall not be valid after the expiration date stated below. BCCO reserves the right to secure this product or material at any time from a jobsite or manufacturer's plant for quality control testing. If this product or material fails to perform in the approved manner, BCCO may revoke, modify, or suspend the use of such product or material immediately. BCCO reserves the right to revoke this approval, if it is determined by BCCO that this product or material fails to meet the requirements of the South Florida Building Code.

The expense of such testing will be incurred by the manufacturer.

**ACCEPTANCE NO.: 00-0912.01**
**EXPIRES: 10/16/2005**

Raul Rodriguez
Chief Product Control Division

**THIS IS THE COVERSHEET, SEE ADDITIONAL PAGES FOR SPECIFIC AND GENERAL CONDITIONS**
**BUILDING CODE & PRODUCT REVIEW COMMITTEE**

This application for Product Approval has been reviewed by the BCCO and approved by the Building Code and Product Review Committee to be used in Miami-Dade County, Florida under the conditions set forth above.

Francisco J. Quintana, R.A.
Director
Miami-Dade County
Building Code Compliance Office

**APPROVED: 12/21/2000**

**Jamerco, Inc.**

**ACCEPTANCE NO: 00-0912.01**

**APPROVED: DEC 2 1 2000**

**EXPIRES : 10/16/2005**

## NOTICE OF ACCEPTANCE: SPECIFIC CONDITIONS

**1. SCOPE**

**1.1** This renews the Notice of Acceptance No. 97-0224.01 that was issued on 10/16/97. It approves a power driven fasteners as described in Section 2 of this Notice of Acceptance, designed to comply with the South Florida Building Code (SFBC), 1994 Edition for Miami-Dade County. For the locations where the actual loads as determined by SFBC Chapter 23, do not exceed the allowable load indicated in the approved drawings.

**2. PRODUCT DESCRIPTION**

**2.1** **The Jamerco** power actuated fastener shall be fabricated and used in strict compliance with the following documents: Drawing No JM001, titled "Jamerco Low-Velocity Power – Actuated Fasteners", prepared by Jamerco, Inc. dated 10/30/00 sheet 1 of 1. The drawings bear the Miami-Dade County Product Control Approval stamp with the Notice of Acceptance number and approval date by the Miami-Dade Product Control Division. These documents shall hereinafter be referred to as the approved drawings.

**3. LIMITATIONS**

**3.1** Allowable loads are for 2000 & 4000 psi compressive strength Concrete.

**4. INSTALLATION**

**4.1** The concrete anchor shall be installed in strict compliance with the installation instructions published by Jamerco, Inc.

**5. LABELING**

**5.1** Each concrete anchors shall have a mark identifying the manufacturer and each box of anchors shall have a permanent label with the manufacturer's name or logo, city, state and the following statement: "Miami-Dade County Product Control Approved".

**6. BUILDING PERMIT**

**6.1** Application for Building Permit shall be accompanied by copies of the following:

**6.1.1** This Notice of Acceptance

**6.1.2** Duplicate copies of the approved drawings as identified in Section 2 of this Notice of Acceptance, clearly marked to show the hangers and angles selected for the proposed installation.

**6.1.3** Any other document required by the Building Official or the SFBC in order to properly evaluate the installation of these products.

Candido Font, PE, Sr. Product Control Examiner
Product Control Division

**Jamerco, Inc.**

**ACCEPTANCE NO.: 00-0912.01**

**APPROVED:** DEC 2 1 2000

**EXPIRES: 10/16/2005**

## NOTICE OF ACCEPTANCE STANDARD CONDITIONS

1. Renewal of this Acceptance (approval) shall be considered after a renewal application has been filed and the original submitted documentation, including test supporting data, engineering documents, are no older than eight (8) years.

2. Any and all approved products shall be permanently labeled with the manufacturer's name, city, state, and the following statement: "Miami-Dade County Product Control Approved", or as specifically stated in the specific conditions of this Acceptance.

3. Renewals of Acceptance will not be considered if:
   a) There has been a change in the South Florida Building Code affecting the evaluation of this product and the product is not in compliance with the code changes;
   b) The product is no longer the same product (identical) as the one originally approved;
   c) If the Acceptance holder has not complied with all the requirements of this acceptance, including the correct installation of the product;
   d) The engineer who originally prepared, signed and sealed the required documentation initially submitted is no longer practicing the engineering profession.

4. Any revision or change in the materials, use, and/or manufacture of the product or process shall automatically be cause for termination of this Acceptance, unless prior written approval has been requested (through the filing of a revision application with appropriate fee) and granted by this office.

5. Any of the following shall also be grounds for removal of this Acceptance:
   a) Unsatisfactory performance of this product or process.
   b) Misuse of this Acceptance as an endorsement of any product, for sales, advertising or any other purpose.

6. The Notice of Acceptance number preceded by the words Miami-Dade County, Florida, and followed by the expiration date may be displayed in advertising literature. If any portion of the Notice of Acceptance is displayed, then it shall be done in its entirety.
7. A copy of this Acceptance as well as approved drawings and other documents, where it applies, shall be provided to the user by the manufacturer or its distributors and shall be available for inspection at the job site at all time. The engineer need not reseal the copies.

8. Failure to comply with any section of this Acceptance shall be cause for termination and removal of Acceptance.

9. This Notice of Acceptance consists of pages 1, 2 and this last page 3.

Candido Font, PE, Sr. Product Control Examiner
Product Control Division

**END OF THIS ACCEPTANCE**

## JP-AC SERIES

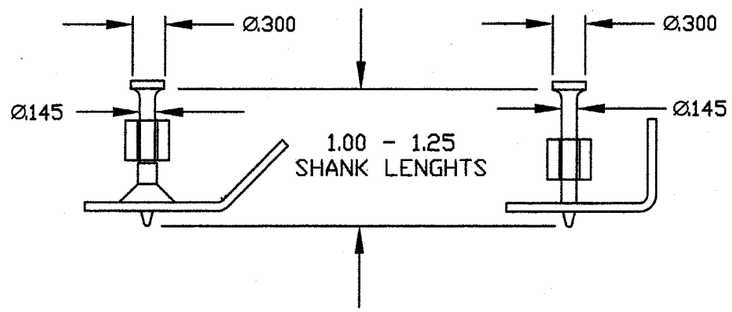


## JPW SERIES

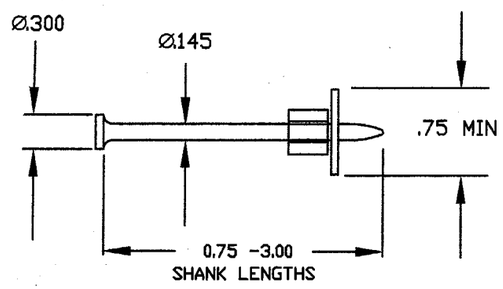


## JP SERIES

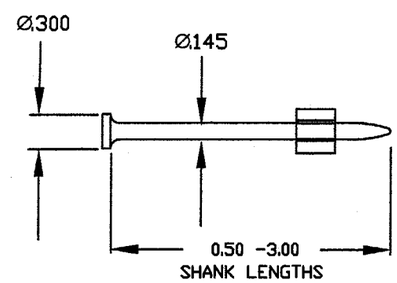


## ALLOWABLE LOADS (LBS)

| MODEL SERIES | SHANK DIAMETER | WASHER DIAMETER | EMBEDMENT INCHES | CONCRETE STRENGTH 2000 PSI TENSION | CONCRETE STRENGTH 2000 PSI SHEAR |
|---|---|---|---|---|---|
| JPW-300 | 0.150" (9/64") | Ø1.00" | 1 1/2" | 149 | 162 |
| | | Ø.75" | 1" | 149 | 131 |

## ALLOWABLE LOADS (LBS)

| MODEL SERIES | SHANK DIAMETER | EMBEDMENT INCHES | CONCRETE STRENGTH 2000 PSI TENSION | CONCRETE STRENGTH 2000 PSI SHEAR |
|---|---|---|---|---|
| JS | 0.205" (13/64") | 1 1/4" | 179 | 269 |
| | | 1" | 267 | 269 |

## REVISIONS

| REV | DESCRIPTION | CHECKED | APPROVED |
|---|---|---|---|
| | | | |

## ALLOWABLE LOADS (LBS)

| MODEL SERIES | FASTENER LENGTH | EMBEDMENT INCHES | CONCRETE STRENGTH 2000 PSI TENSION | CONCRETE STRENGTH 2000 PSI SHEAR | CONCRETE STRENGTH 4000 PSI TENSION | CONCRETE STRENGTH 4000 PSI SHEAR |
|---|---|---|---|---|---|---|
| JP & JPW | 0.75" to 2.50" | 3/4" | ---- | 80 | ---- | 80 |
| | | 7/8" | 93 | 80 | 101 | 80 |
| | | 1" | 106 | 162 | 101 | 235 |
| | | 1-1/8" | 106 | 162 | 102 | 235 |
| | | 1-1/4" | 149 | 162 | 253 | 235 |

1) MINIMUM EDGE DISTANCE 3 INCHES.
2) MINIMUM CENTER TO CENTER DISTANCE 4 INCHES, EXCEPT FOR JS SERIES THAT IS 5 INCHES.
3) ALLOWABLE LOADS ARE BASED ON ULTIMATE LOADS DIVIDED BY 8. AND APPROVED FOR STATIC LOAD ONLY.
4) EMBEDMENT IS THE DEPTH OF PENETRATION OF THE FASTENER WITHIN THE SUBSTRATE.
5) ONLY FASTENERS WHICH CAN ATTAIN THE EMBEDMENTS LISTED ABOVE ARE APPLICABLE TO THE ABOVE LOADS
6) FASTENING MEMBERS (WOOD OR STEEL) SHALL BE INVESTIGATED IN ACCORDANCE WITH THE ACCEPTED DESIGN CRITERIA.

## JS SERIES

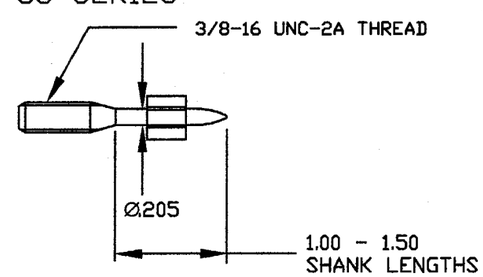


HARRY WIEWEL CERTIFICATE No. 51263 STATE OF FLORIDA PROFESSIONAL ENGINEER

APPROVED AS COMPLYING WITH THE SOUTH FLORIDA BUILDING CODE
DATE December 21, 2000
BY
PRODUCT CONTROL DIVISION
BUILDING CODE COMPLIANCE OFFICE
ACCEPTANCE NO. 00-0912.01

| | |
|---|---|
| REV A | REV DATE 30-OCT-2000 |
| DRAWN | K. POTTER |
| DATE | 30-OCT-2000 |
| CHECKED | H. WIEWEL |
| DATE | 31-OCT-2000 |
| ENGINEER | H. WIEWEL, P.E. |
| DISCIPLINE | CIVIL ENGINEER |
| FLORIDA REGISTRATION NO. | 51263 |

JAMERCO, INC.
18088 CORTNEY COURT
CITY OF INDUSTRY, CA 91748

TITLE
JAMERCO LOW-VELOCITY POWDER-ACTUATED FASTENERS

SIZE B | DWG NO JM001
SCALE NONE | SHEET 1