MIAMI-DADE COUNTY, FLORIDA
METRO-DADE FLAGLER BUILDING

BUILDING CODE COMPLIANCE OFFICE
METRO-DADE FLAGLER BUILDING
140 WEST FLAGLER STREET, SUITE 1603
MIAMI, FLORIDA 33130-1563
(305) 375-2901 FAX (305) 375-2908

CONTRACTOR LICENSING SECTION
(305) 375-2527 FAX (305) 375-2558

CONTRACTOR ENFORCEMENT DIVISION
(305) 375-2966 FAX (305) 375-2908

PRODUCT CONTROL DIVISION
(305) 375-2902 FAX (305) 372-6339

PRODUCT CONTROL NOTICE OF ACCEPTANCE

Climatrol Quality Aluminum Products, Inc.
890 W. 84 St.
Hialeah ,FL 33014

Your application for Notice of Acceptance (NOA) of:
Aluminum Framed Screen Enclosures
under Chapter 8 of the Code of Miami-Dade County governing the use of Alternate Materials and Types of Construction, and completely described herein, has been recommended for acceptance by the Miami-Dade County Building Code Compliance Office (BCCO) under the conditions specified herein.

This NOA shall not be valid after the expiration date stated below. BCCO reserves the right to secure this product or material at any time from a jobsite or manufacturer's plant for quality control testing. If this product or material fails to perform in the approved manner, BCCO may revoke, modify, or suspend the use of such product or material immediately. BCCO reserves the right to revoke this approval, if it is determined by BCCO that this product or material fails to meet the requirements of the South Florida Building Code.

The expense of such testing will be incurred by the manufacturer.

ACCEPTANCE NO.: 00-0913.04
EXPIRES: 12/11/2005

Raul Rodriguez
Chief Product Control Division

THIS IS THE COVERSHEET, SEE ADDITIONAL PAGES FOR SPECIFIC AND GENERAL CONDITIONS
BUILDING CODE & PRODUCT REVIEW COMMITTEE

This application for Product Approval has been reviewed by the BCCO and approved by the Building Code and Product Review Committee to be used in Miami-Dade County, Florida under the conditions set forth above.

Francisco J. Quintana, R.A.
Director
Miami-Dade County
Building Code Compliance Office

APPROVED: 11/16/2000

Climatrol Quality Aluminum Products, Inc.

ACCEPTANCE No. : 00-0913.04

APPROVED : 11/16/2000

EXPIRES : 12/11/2005

NOTICE OF ACCEPTANCE: SPECIFIC CONDITIONS

1. SCOPE

This renews the Notice of Acceptance No. 97-0731.16, which was issued on December 11, 1997. It approves an Aluminum Framed Screen Enclosure, as described in Section 2 of this Notice of Acceptance, designed to comply with the South Florida Building Code, 1994 Edition for Miami-Dade County, for the locations where the pressure requirements, as determined by SFBC Chapter 23, do not exceed the Design Pressure Rating values indicated in the approved drawings.

2. PRODUCT DESCRIPTION

This Aluminum Framed Screen Enclosure and its components shall be constructed in strict compliance with the following documents: Drawing No. 1071 titled "Climatrol South", prepared by Ramms Engineering, Inc., dated July 2, 1994, last revised on June 12, 1995, sheets 1 and 2 of 3 and dated June 6, 1995, sheet 3 of 3, all bearing the Miami-Dade County Product Control Approval and Renewal stamps with the Notice of Acceptance numbers and approval dates by the Miami-Dade County Product Control Division. These documents shall hereinafter be referred to as the approved drawings.

3. LIMITATIONS

All permanent set components, included but not limited to embedded anchor bolts, must be protected against corrosion, contamination and damage at all times.

4. INSTALLATION

This Aluminum Framed Screen Enclosure and its components shall be installed in strict compliance with the approved drawings.

5. LABELING

A permanent label with the manufacturer's name or logo, city, state and the following statement: "Miami-Dade County Product Control Approved," shall be attached to the bottom of each chair rail.

6. BUILDING PERMIT REQUIREMENTS

6.1 Application for building permit shall be accompanied by copies of the following:

- **6.1.1** This Notice of Acceptance.
- **6.1.2** Duplicate copies of the approved drawings, as identified in Section 2 of this Notice of Acceptance, clearly marked to show the components selected for the proposed installation.
- **6.1.3** Any other documents required by the Building Official or the South Florida Building Code (SFBC) in order to properly evaluate the installation of this system.

Helmy A. Makar

Helmy A. Makar, P.E.- Product Control Examiner
Product Control Division

Climatrol Quality Aluminum Products, Inc.

ACCEPTANCE No. : 00-0913.04

APPROVED : 11/16/2000

EXPIRES : 12/11/2005

NOTICE OF ACCEPTANCE: STANDARD CONDITIONS

1 Renewal of this Acceptance (approval) shall be considered after a renewal application has been filed and the original submitted documents, including test-supporting data, engineering documents, are no older than eight (8) years.

2. Any and all approved products shall be permanently labeled with the manufacturer's name, city, state, and the following statement: "Miami-Dade County Product Control Approved", or as specifically stated in the specific conditions of this Acceptance.

3. Renewals of Acceptance will not be considered if:
   a. There has been a change in the South Florida Building Code affecting the evaluation of this product and the product is not in compliance with the code changes.
   b. The product is no longer the same product (identical) as the one originally approved.
   c. If the Acceptance holder has not complied with all the requirements of this acceptance, including the correct installation of the product.
   d. The engineer, who originally prepared, signed and sealed the required documentation initially submitted, is no longer practicing the engineering profession.

4. Any revision or change in the materials, use, and/or manufacture of the product or process shall automatically be cause for termination of this Acceptance, unless prior written approval has been requested (through the filing of a revision application with appropriate fee) and granted by this office.

5. Any of the following shall also be grounds for removal of this Acceptance:
   a. Unsatisfactory performance of this product or process.
   b. Misuse of this Acceptance as an endorsement of any product, for sales, advertising or any other purposes.

6. The Notice of Acceptance number preceded by the words Miami-Dade County, Florida, and followed by the expiration date may be displayed in advertising literature. If any portion of the Notice of Acceptance is displayed, then it shall be done in its entirety.

7. A copy of this Acceptance as well as approved drawings and other documents, where it applies, shall be provided to the user by the manufacturer or its distributors and shall be available for inspection at the job site at all time. The engineer needs not reseal the copies.

8. Failure to comply with any section of this Acceptance shall be cause for termination and removal of Acceptance.

9. This Notice of Acceptance consists of pages 1, 2 and this last page 3.

END OF THIS ACCEPTANCE

Helmy A. Makar

Helmy A. Makar, P.E.- Product Control Examiner
Product Control Division

PRODUCT RENEWED

NON- COASTAL ZONE (ASCE 7-88)

ACCEPTANCE No. 00-0913.04
EXPIRATION DATE 12/11/2005
By Helmut A. Mahler
PRODUCT CONTROL DIVISION
BUILDING CODE COMPLIANCE OFFICE

BEAM AND COLUMN SCHEDULE

MARK	SIZE	T1	T2	TYPE	MAX. BEAM SPANS AT GIVEN SPACINGS 5'-0"	5'-6"	6'-0"	6'-6"	7'-0"	7'-6"	8'-0"
Box Bm.	2 x 2	.055	.055	HOLLOW	6'-11"	6'-9"	6'-7"	6'-4"	6'-3"	6'-1"	5'-11"
Box Bm.	2 X 3	.055	.055	SNAP	9'-7"	9'-3"	9'-0"	8'-9"	8'-7"	8'-4"	8'-2"
Box Bm.	2 X 4	.062	.062	SNAP	12'-6"	12'-2"	11'-9"	11'-5"	11'-2"	10'-11"	10'-8"
Box Bm.	2 X 4	.120	.055	LAP	14'-3"	13'-9"	13'-4"	13'-0"	12'-8"	12'-5"	12'-2"
Box Bm.	2 X 5	.062	.062	SNAP	15'- 1"	14'-7"	14'-2"	13'-9"	13'-5"	13'-2"	12'-10"
Box Bm.	2 X 6	.130	.055	LAP	19'-10"	19'-3"	18'-8"	18'-2"	17'-9"	17'-4"	16'-9"
Box Bm.	2 X 6	.120	.062	SNAP	19'-11"	19'-4"	18'-9"	18'-3"	17'-10"	17'-5"	17'-1"
Box Bm.	2 X 7	.130	.068	SNAP	22'-11"	22'-3"	21'-7"	21'-0"	20'-6"	20'-1"	19'-7"
Box Bm.	2 X 7	.130	.055	LAP	21'-7"	20'-7"	19'-9"	18'-11"	18'-3"	17'-8"	17'-1"
Box Bm.	2 X 7	.280	.070	LAP	27'-1"	26'-3"	25'-5"	24'-9"	24'-2"	23'-7"	23'-2"
Box Bm.	2 X 8	.224	.072	LAP	28'-8"	27'-9"	26'-11"	26'-3"	25'-7"	25'-0"	24'-6"
Box Bm.	2 X 8	.224	.082	LAP	29'-0"	28'-2"	27'-3"	26'-7"	25'-11"	25'-4"	24'-10"
Box Bm.	2 X 9	.224	.072	LAP	31'-5	30'-5"	29'-3"	28'-1"	27'-1"	26'-2"	25'-4"
Box Bm.	2 X 9	.320	.082	LAP	34'-3"	33'-3"	32'-3"	31'-5"	30'-8"	30'-0"	29'-4"
Box Bm.	2 x 10	.360	.092	LAP	38'-7"	37'-4"	36'-4"	35'-4"	34'-6"	33'-8"	33'-0"

PURLIN TABLE : HEAVY LINE INDICATES MAXIMUM SPAN FOR 4" GUTTER "Z" BRACKET. NO LIMIT TO 5" GUTTER BRACKET.

2 X 2	.055	.055	HOLLOW	MAXIMUM SPAN = 7'- 0" AS PURLIN AND CHAIRRAIL*
2 X 3	.055	.055	HOLLOW	MAXIMUM SPAN = 8'- 0" AS PURLIN AND CHAIRRAIL

NOTE: MAXIMUM SPACING OF PURLINS = 84". MAXIMUM AREA IN ANY PANEL = 56 SQ. FT.
MAXIMUM SPACING OF 2X2 CHAIRRAILS = 60" AVG.
MAXIMUM SPACING OF 3X2 CHAIRRAILS = 72" AVG. SPANS SHOWN ABOVE ARE CLEAR SPANS. 4" MAY BE ADDED TO EACH SPAN SHOWN.

MARK	SIZE	T1	T2	TYPE	MAX. COLUMN HEIGHTS AT GIVEN SPACINGS 5'-0"	5'-6"	6'-0"	6'-6"	7'-0"	7'-6"	8'-0"
Box Col.	2 X 3	.055	.055	SNAP	6'-8"	6'-6"	6'-2"	5'-11"	5'-9"	5'-7"	5'-4"
Box Col.	2 X 4	.062	.062	SNAP	9'-2"	8'-8"	8'-4"	8'-0"	7'-9"	7'-5"	7'-3"
Box Col.	2 X 4	.120	.055	LAP	11'-1"	10'-7"	10'-1"	9'-8"	9'-4"	9'-0"	8'-9"
Box Col.	2 x 5	.062	.062	LAP	13'-4"	12'-9"	12'-2"	11'-9"	11'-4"	10'-11"	10'-7"
Box Col.	2 X 6	.130	.055	LAP	15'-10"	15'-1"	14'-5"	13'-10"	13'-4"	12'-11"	12'-6"
Box Col.	2 X 7	.130	.055	SNAP	16'-6"	15'-9"	15'-1"	14'-5"	13'-11"	13'-6"	13'-0"
Box Col.	2 X 7	.280	.070	LAP	22'-0"	21'-4"	20'-9"	20'-1"	19'-4"	18'-8"	18'-1"
Box Col.	2 X 8	.224	.082	LAP	23'-10"	23'-1"	22'-1"	21'-3"	20'-5"	19'-9"	19'-2"

*** NOTE: MAX SPACING OF CHAIRRAILS IS 78" SPANS SHOWN ABOVE ARE CLEAR SPANS. 4" MAY BE ADDED TO EACH SPAN SHOWN.
2X3 AND 2X4 NON-LOAD BEARING BOX COLUMNS MAY BE INCREASED AN ADDITIONAL 10 % TO THE HEIGHTS SHOWN ABOVE.
ALL OTHER COLUMNS TO REMAIN THE SAME.

TYP. CROSS SECTIONS

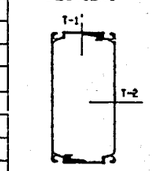

SNAP BEAM

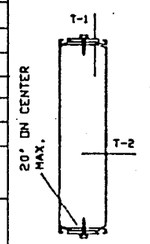

LAP-BEAM

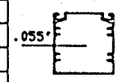

2 X 2 PURLIN

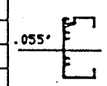

1 X 2 PATIO

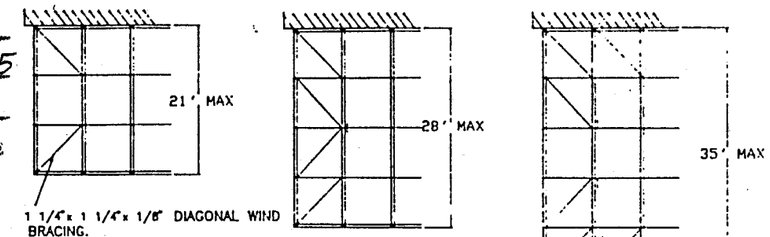

1 1/4"x 1 1/4"x 1/8" DIAGONAL WIND BRACING.

ROOF BRACING LAYOUT

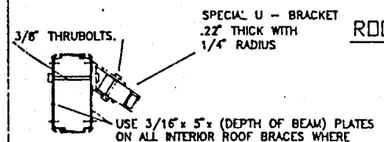

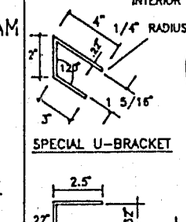

SPECIAL U-BRACKET

90° U-BRACKET MAY BE USED IF PROPERLY POSITIONED.

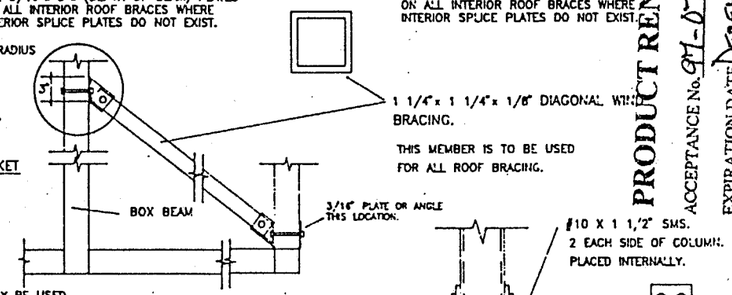

CORNER ROOF BRACE DETAIL

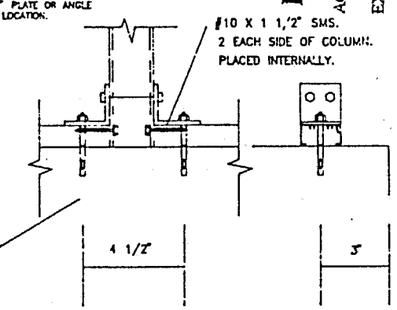

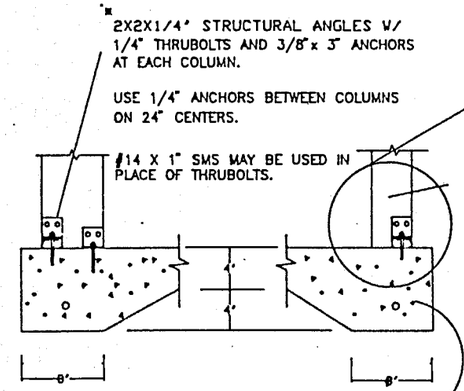

DETAIL OF ANCHORING TO FOOTING

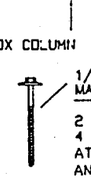

1/4"X 3" TAPCONS MAY BE USED AS FOLLOWS:

2 TAPCONS FOR UP TO 12'-0" SPAN
4 TAPCONS FOR UP TO 24'-0" SPAN.
AT EACH COLUMN.
AND 20" ON CENTER BETWEEN COLUMNS.

USE 2X2X1/8" ANGLES FOR SPANS UNDER 18'.

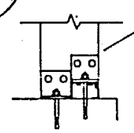

FOR SPANS OVER 18',
4 - 2X2X1/8" BASE ANGLES
MAY BE USED AS SHOWN
IN PLACE OF 2 - 1/4" ANGLES
ON COLUMNS SUPPORTING BEAMS.

ANCHOR BOLTS TO EXTEND 1 1/4" BEYOND CHATT. OR BRICK PAVEMENT SURFACES

WHEN USING 4 ANGLES, 1/4"X 3" ANCHORS MAY BE USED.

NOTE: COLUMNS ALONG END WALLS
REQUIRE ONE PAIR OF 2X2X1/8" ANGLES
UNLESS COLUMNS ARE 2X5 OR GREATER.
THEN TWO PAIR OF ANGLES
ARE REQUIRED.

NOTES:

1) ROOF AND SIDES SHALL BE COVERED WITH SCREEN CLOTH BEING 60% OPEN OR GREATER ONLY.
2) THE EXISTING STRUCTURE MUST BE CAPABLE OF SUPPORTING THE LOADED SCREEN ENCLOSURE.
3) METAL STRUCTURES WITHIN 5 FT. OF SWIMMING POOLS SHALL BE GROUNDED PR N.E.C. 680-22
4) ANCHORS TO CONCRETE & MASONRY SHALL BE 3/8 X 3" ANCHORS OR APPROVED EQUAL UNLESS OTHERWISE SPECIFIED.

DESIGN CRITERIA: SOUTH FLORIDA BUILDING CODE

ASCE 7-88

WALLS DESIGN WIND LOAD IN & OUT ———— 19.6 PSF
TEST LOAD WIND IN & OUT ———— 29.4 PSF
ROOF LIVE LOAD UP & DOWN ———— 10.6 PSF
TEST LOAD UP & DOWN ———— 15.9 PSF
DEFLECTION LIMITATION: ———— L/80

ALUMINUM ALLOY 6063-T6 UNLESS OTHERWISE SPECIFIED.

CARRY BEAM TABLE

CLEAR SPAN OF 2 X 6 CARRY BEAM	MAX SPAN OF SCREEN ENCLOSURE	CLEAR SPAN OF 2 X 7 CARRY BEAM	MAX. SPAN OF SCREEN ENCLOSURE
10'- 0"	*MAXIMUM	14'- 0"	*MAXIMUM
12'- 0"	*MAXIMUM	16'- 0"	27'-7"
14'- 0"	*MAXIMUM	18'- 0"	20'-1"
16'- 0"	23'-4"	20'- 0"	14'-9"
18'- 0"	14'-0"	22'- 0"	10'-1"

*MAXIMUM SPAN SHOWN IN BEAM TABLE ABOVE.

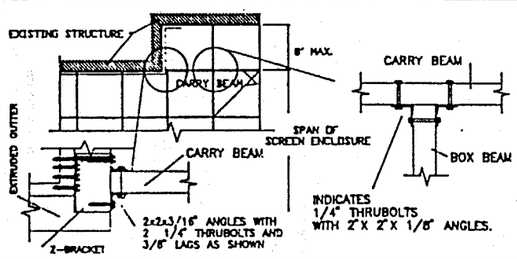

REPRODUCTION AND APPROVAL OF THIS PLAN OR ANY PART THEREOF FOR CONSTRUCTION OR ANY OTHER USE SHALL ONLY BE DONE BY RAMMS ENGINEERING, INC.

THIS PLAN IS INVALID UNLESS SIGNED AND SEALED BY ROBERT S. MONSOUR FOR EACH SUBMITTAL.

APPROVED AS COMPLYING WITH THE SOUTH FLORIDA BUILDING CODE
DATE JULY 27 1995
BY
PRODUCT CONTROL DIVISION
BUILDING CODE COMPLIANCE OFFICE
ACCEPTANCE NO. 95-0615.02

PRODUCT RENEWED
ACCEPTANCE No. 97-0731.16
EXPIRATION DATE DECEMBER 11, 2000
By Helmut A. Mahler
PRODUCT CONTROL DIVISION
BUILDING CODE COMPLIANCE OFFICE

REVISIONS	BY
9/12/94	RM
9/30/94	RM
10/6/94	RM
6/12/95	RM

RAMMS ENGINEERING, INC.
Structural Design
21000 W. 7th STREET, SUITE 311
HIALEAH, FLORIDA 33016
EB 0006024

Climatrol South
9615 NW 80th Avenue
Hialeah Gardens, Fla.

MORRISON
7/12/94
10/7
31

(2X3, 2X4, 2X5 AND 2X6 BOX BEAMS)

USE 1/8"X 2"X 8" STRAPS WITH 6 #14 SMS TOTAL. (3 EACH SIDE OF SPLICE)

(2X7, 2X8, 2X9 AND 2X10 BOX BEAMS)

USE 1/8"X 2"X 12" STRAPS WITH 14 #14 SMS TOTAL. (7 EACH SIDE OF SPLICE)

3/16" X 1 1/4" STRAPS MAY BE USED IN PLACE OF 2" STRAPS.

ALL PLATES

3/16" PLATES WITH #14 SMS AS SHOWN CUT PLATES TO FIT INSIDE OF BOX BEAMS AS SHOWN ON DETAIL

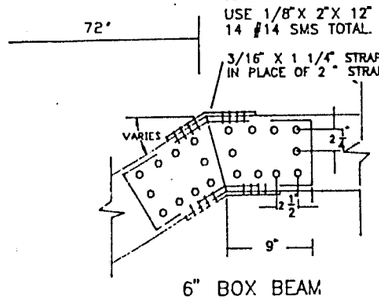

6" BOX BEAM

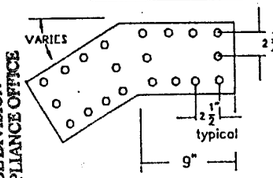

7" BOX BEAM

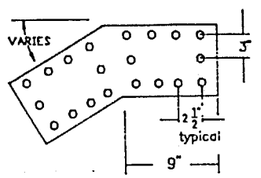

8" BOX BEAM

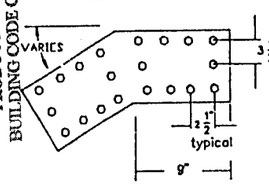

9" BOX BEAM

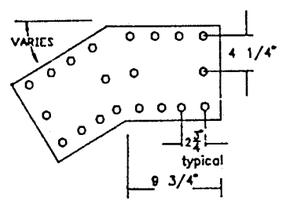

10" BOX BEAM

60" MAX. 3" AND 4" BEAMS.

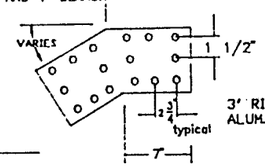

4" BOX BEAM
3" BOX BEAM

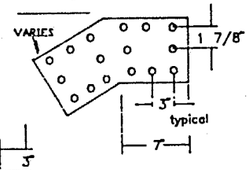

5" BOX BEAM

1X2X3/16" ANGLE 10" LONG AT EACH SCREEN ROOF BEAM

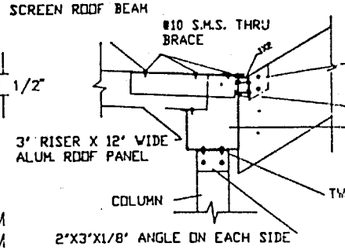

STRUCTURAL GUTTER DETAIL

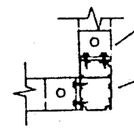

CORNER DETAIL

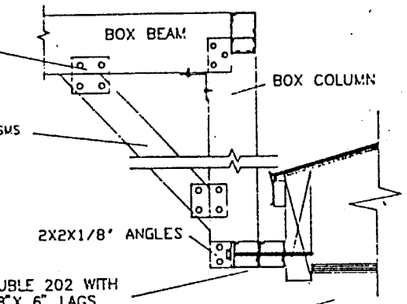

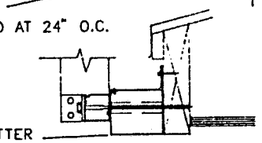

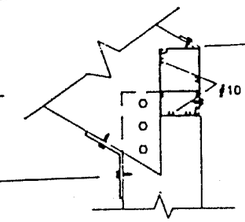

FASCIA CONNECTION FOR DOMES

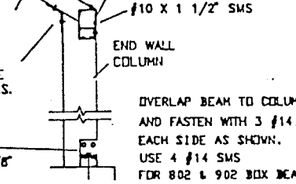

END WALL POST DETAIL

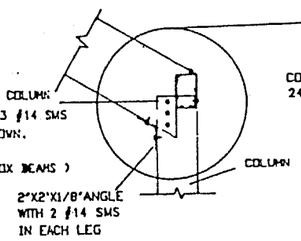

BEAM TO COLUMN CONNECTION

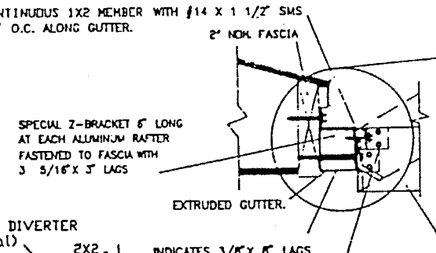

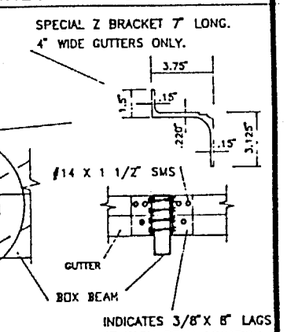

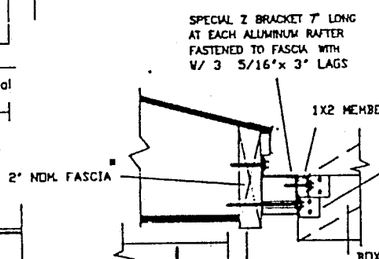

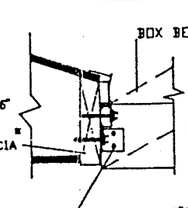

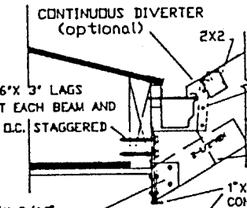

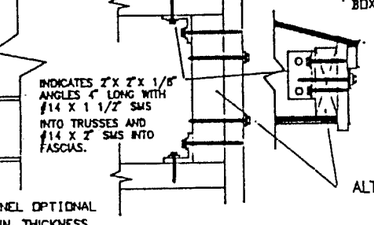

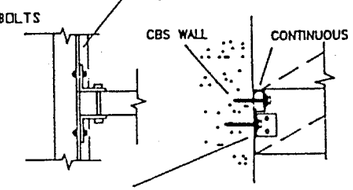

GUTTER BRACE DETAIL

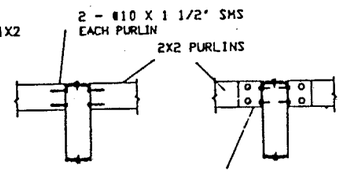

MANSARD BOX BEAM SPLICE DETAIL

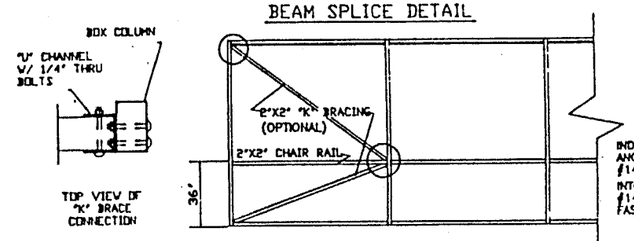

TYPICAL ELEVATION

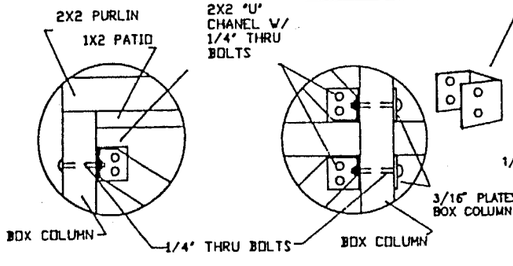

K - BRACE DETAILS

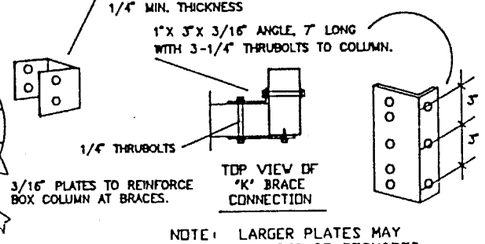

NOTE: LARGER PLATES MAY BE USED IF REQUIRED.

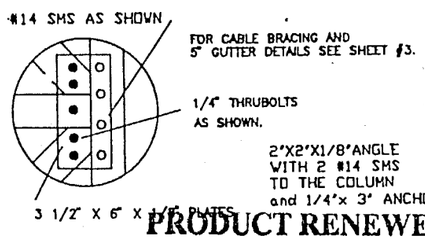

FOR CABLE BRACING AND 5" GUTTER DETAILS SEE SHEET #3.

BOX BEAM DETAILS

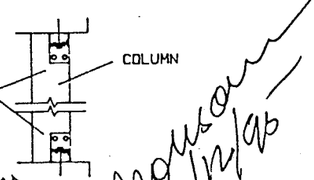

#10 SMS 24" O.C. TOP AND BOTTOM

ALTERNATE BRACE DETAILS ACCEPTANCE No. 97-0731.16

EXPIRATION DATE DECEMBER 11, 2000

PORCH DETAILS.

PRODUCT RENEWED

By Helena A. Hale

PRODUCT CONTROL DIVISION
BUILDING CODE COMPLIANCE OFFICE

APPROVED AS COMPLYING WITH THE SOUTH FLORIDA BUILDING CODE

DATE JULY 27 1995

BY

PRODUCT CONTROL DIVISION
BUILDING CODE COMPLIANCE OFFICE

ACCEPTANCE NO. 95-0615.02

REPRODUCTION AND APPROVAL OF THIS PLAN OR ANY PART THEREOF FOR CONSTRUCTION OR ANY OTHER USE SHALL ONLY BE DONE BY RAMMS ENGINEERING, INC.

THIS PLAN IS INVALID UNLESS SIGNED AND SEALED BY ROBERT S. MONSOUR FOR EACH SUBMITTAL.

REVISIONS	BY
9/12/94	RM
9/20/94	RM
10/6/94	RM
6/12/95	RM

RAMMS ENGINEERING, INC.
Structural Design
2100 W. 76th STREET, SUITE 311
HIALEAH, FLORIDA 33016
EB 0006024

Climatrol South
9615 NW 80th Avenue
Hialeah Gardens, Fla.

MONSOUR
7/1/94
10 II
2
-3

SPECIAL Z BRACKET 7" LONG.
4" WIDE GUTTERS ONLY.

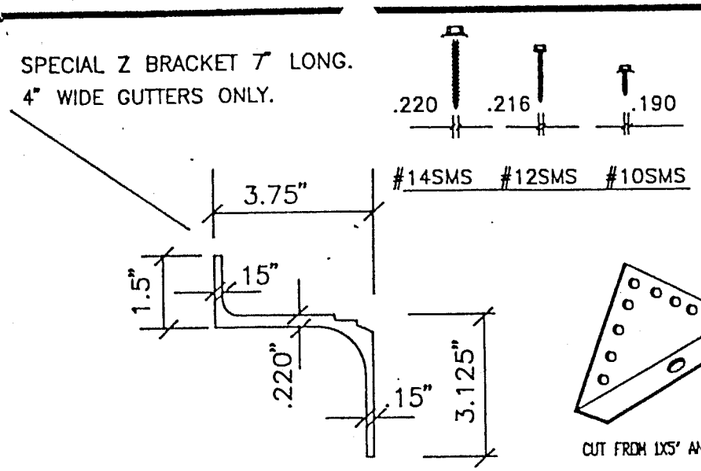

4" Z-BRACKET

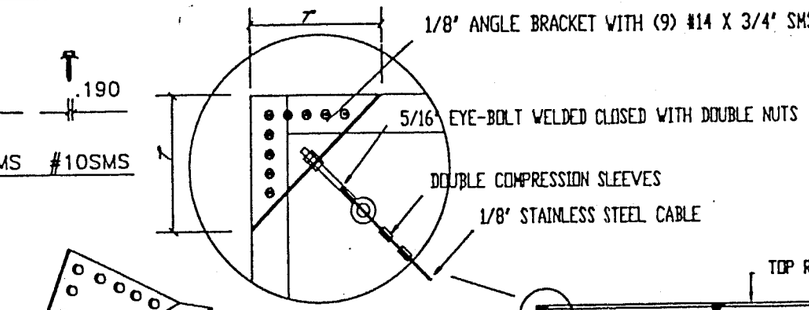

END NON LOAD BEARING WALL SQUARE FOOTAGE				
1-145	146-273	274-363	364-416	417-443
TOTAL NUMBER OF CABLES ON THE FRONT LOAD BEARING WALL				
2	4	6	8	10
1 EA. END	2 EA. END	3 EA. END	4 EA. END	5 EA. END

QUANTITIES ABOVE ARE FOR 3 SIDED ENCLOSURES.
REFER TO ENGINEER'S SITE SPECIFIC PLAN FOR OTHER CONDITIONS.
USE ONE SET OF CABLES ON RETURN WALLS
FOR SPANS OVER 16 FEET.

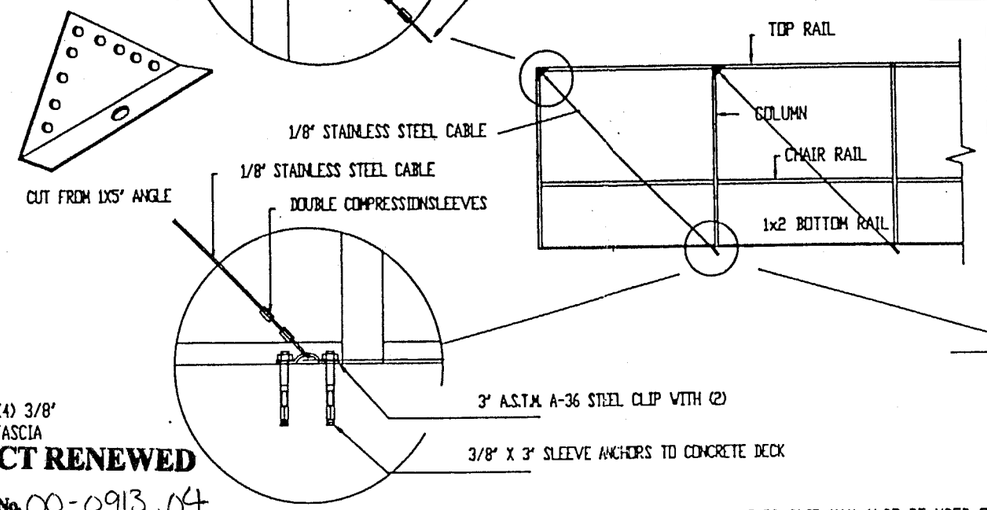

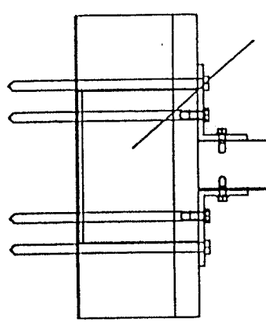

PRODUCT RENEWED
ACCEPTANCE No. 00-0913.04
EXPIRATION DATE 12/11/2005
By [signature]
PRODUCT CONTROL DIVISION
BUILDING CODE COMPLIANCE OFFICE

ALTERNATE

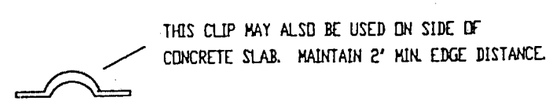

CABLE BRACING DETAIL

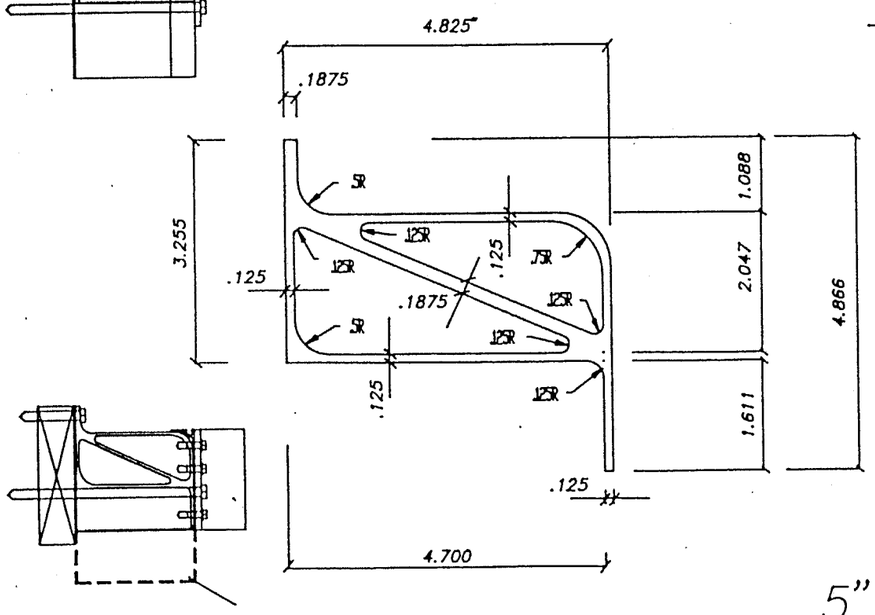

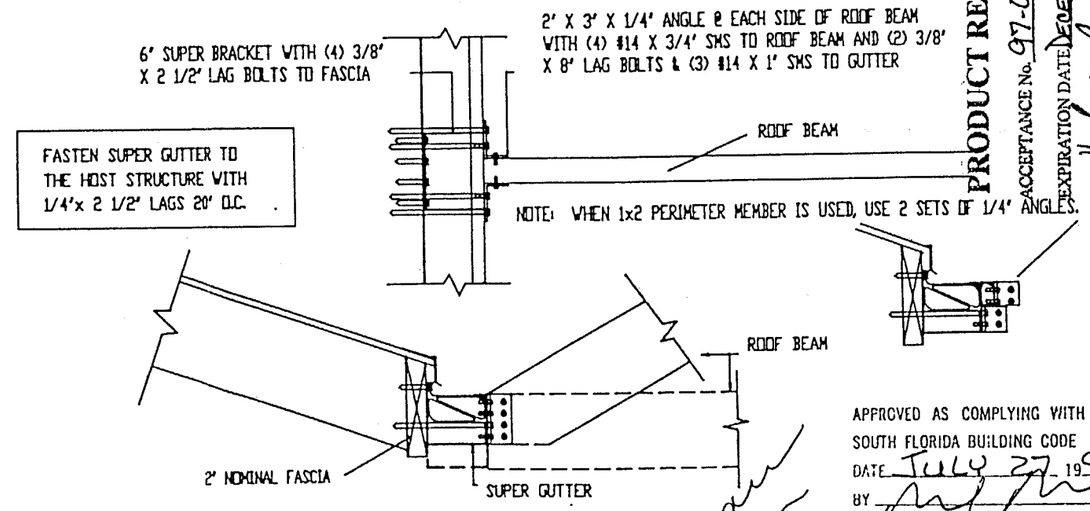

FASTEN SUPER GUTTER TO
THE HOST STRUCTURE WITH
1/4"x 2 1/2" LAGS 20" O.C.

PRODUCT RENEWED
ACCEPTANCE No. 97-0731.16
EXPIRATION DATE DECEMBER 11, 2000
By [signature]
PRODUCT CONTROL DIVISION
BUILDING CODE COMPLIANCE OFFICE

5" GUTTER BRACKET DETAILS

APPROVED AS COMPLYING WITH THE
SOUTH FLORIDA BUILDING CODE
DATE JULY 27, 1995
BY [signature]
PRODUCT CONTROL DIVISION
BUILDING CODE COMPLIANCE OFFICE
ACCEPTANCE NO. 95-0615.02

Monsour 6/6/95

REVISIONS	BY

RAMMS ENGINEERING, INC.
Structural Design
2100 W. 76th STREET, SUITE 311
HIALEAH, FLORIDA 33016
EB 0006024

Climatrol South
9615 NW 80th Avenue
Hialeah Gardens, Fla.

DRAWN	MONSOUR
APPROVED	RSM
DATE	JUNE 6, 1995
SCALE	SHOWN
JOB	1071
SHEET	3

3