MIAMI-DADE

MIAMI-DADE COUNTY, FLORIDA
METRO-DADE FLAGLER BUILDING

BUILDING CODE COMPLIANCE OFFICE
METRO-DADE FLAGLER BUILDING
140 WEST FLAGLER STREET, SUITE 1603
MIAMI, FLORIDA 33130-1563
(305) 375-2901 FAX (305) 375-2908

CONTRACTOR LICENSING SECTION
(305) 375-2527 FAX (305) 375-2558

CONTRACTOR ENFORCEMENT DIVISION
(305) 375-2966 FAX (305) 375-2908

PRODUCT CONTROL DIVISION
(305) 375-2902 FAX (305) 372-6339

PRODUCT CONTROL NOTICE OF ACCEPTANCE

Aquatherm Industries, Inc.
1985 Rutgers University Blvd.
Lakewood ,NJ 08701

Your application for Notice of Acceptance (NOA) of:
Solar Pool Heating Collectors
under Chapter 8 of the Code of Miami-Dade County governing the use of Alternate Materials and Types of Construction, and completely described herein, has been recommended for acceptance by the Miami-Dade County Building Code Compliance Office (BCCO) under the conditions specified herein.

This NOA shall not be valid after the expiration date stated below. BCCO reserves the right to secure this product or material at any time from a jobsite or manufacturer's plant for quality control testing. If this product or material fails to perform in the approved manner, BCCO may revoke, modify, or suspend the use of such product or material immediately. BCCO reserves the right to revoke this approval, if it is determined by BCCO that this product or material fails to meet the requirements of the South Florida Building Code.

The expense of such testing will be incurred by the manufacturer.

ACCEPTANCE NO.: 00-0915.01
EXPIRES: 08/07/2003

Raul Rodriguez
Chief Product Control Division

THIS IS THE COVERSHEET, SEE ADDITIONAL PAGES FOR SPECIFIC AND GENERAL CONDITIONS
BUILDING CODE & PRODUCT REVIEW COMMITTEE

This application for Product Approval has been reviewed by the BCCO and approved by the Building Code and Product Review Committee to be used in Miami-Dade County, Florida under the conditions set forth above.

Francisco J. Quintana, R.A.
Director
Miami-Dade County
Building Code Compliance Office

APPROVED: 12/21/2000

Aquatherm Industries, Inc.

ACCEPTANCE NO: 00-0915.01

APPROVED: DEC 2 1 2000

EXPIRES: 08/07/2003

NOTICE OF ACCEPTANCE : STANDARD CONDITIONS

1. Renewal of this Acceptance (approval) shall be considered after a renewal application has been filed and the original submitted documentation, including test supporting data, engineering documents, are no older than eight (8) years.

2. Any and all approved products shall be permanently labeled with the manufacturer's name, city, state and the following statement: "Miami-Dade County Product Control Approved", or as specifically stated in the specific conditions of this Acceptance.

3. Renewals of Acceptance will not be considered if:
   a) There has been a change in the South Florida Building Code affecting the evaluation of this product and the product is not in compliance with the code changes;
   b) The product is no longer the same product (identical) as the one originally approved;
   c) If the Acceptance holder has not complied with all the requirements of this acceptance, including the correct installation of the product;
   d) The engineer, who originally prepared, signed and sealed the required documentation initially submitted, is no longer practicing the engineering profession.

4. Any revision or change in the materials, use, and/or manufacture of the product or process shall automatically be cause for termination of this Acceptance, unless prior written approval has been requested (through the filing of a revision application with appropriate fee) and granted by this office.

5. Any of the following shall also be grounds for removal of this Acceptance:
   a) Unsatisfactory performance of this product or process;
   b) Misuse of this Acceptance as an endorsement of any product, for sales, advertising or any other purpose.

6. The Notice of Acceptance number preceded by the words Dade County, Florida, and followed by the expiration date may be displayed in advertising literature. If any portion of the Notice of Acceptance is displayed, then it shall be done in its entirety.

7. A copy of this Acceptance as well as approved drawings and other documents, where it applies, shall be provided to the user by the manufacturer or its distributors and shall be available for inspection at the job site at all time. The engineer needs not reseal the copies.

8. Failure to comply with any section of this Acceptance shall be cause for termination and removal of Acceptance.

9. This Acceptance consists of pages 1, 2, and this last page 3.

END OF THIS ACCEPTANCE

Candido F. Font, P.E. – Senior Product Control Examiner
Product Control Division

Aquatherm Industries, Inc.

ACCEPTANCE NO: 00-0915.01

APPROVED: DEC 2 1 2000

EXPIRES: 08/072003

NOTICE OF ACCEPTANCE: SPECIFIC CONDITIONS

1. SCOPE

This renews the Notice of Acceptance No. 95-1130.01 that was issued on 08/07/97. It approves a Solar Pool Heating Collector as described in Section 2 of this Notice of Acceptance, designed to comply with the South Florida Building Code, 1994 Edition for Miami-Dade County. For the locations where the pressure requirements, as determined by SFBC Chapter 23, do not exceed the Design Pressure Rating values indicated in the approved drawings.

2. PRODUCT DESCRIPTION

The **Solar Pool Heating Collector** and its components shall be constructed in strict compliance with the following documents: Drawing No. MD1, MD2 & MD3 sheets 1, 2 & 3 titled "Installation Details Solar Heating System for Swimming Pools", prepared by Healey & Associates, dated 09/22/96 & 11/06/95, with last revision on 11/24/00. It bears the Miami-Dade County Product Control Approval stamp with the Notice of Acceptance number and approval date by the Miami-Dade County Product Control Division. These documents shall hereinafter be referred to as the approved drawings.

3. LIMITATIONS

All permanent set components must be protected against corrosion, contamination and damage at all times.

4. INSTALLATION

This Solar Pool Heating Collector must be installed in strict compliance with the approved drawings.

5. LABELING

Each unit shall bear a permanent label with the manufacturer's name or logo, city, state and the following statement: "Miami-Dade County Product Control Approved".

6. BUILDING PERMIT REQUIREMENTS

6.1 Application for building permit shall be accompanied by copies of the following:

- **6.1.1** This Notice of Acceptance.
- **6.1.2** Duplicate copies of the approved drawings, as indicated in Section 2 of this Notice of Acceptance, clearly marked to show the components selected for the proposed installation.
- **6.1.3** Any other documents required by the Building Official or the South Florida Building Code (SFBC) in order to properly evaluate the installation of this system.

Candido F. Font P.E. – Senior Product Control Examiner
Product Control Division

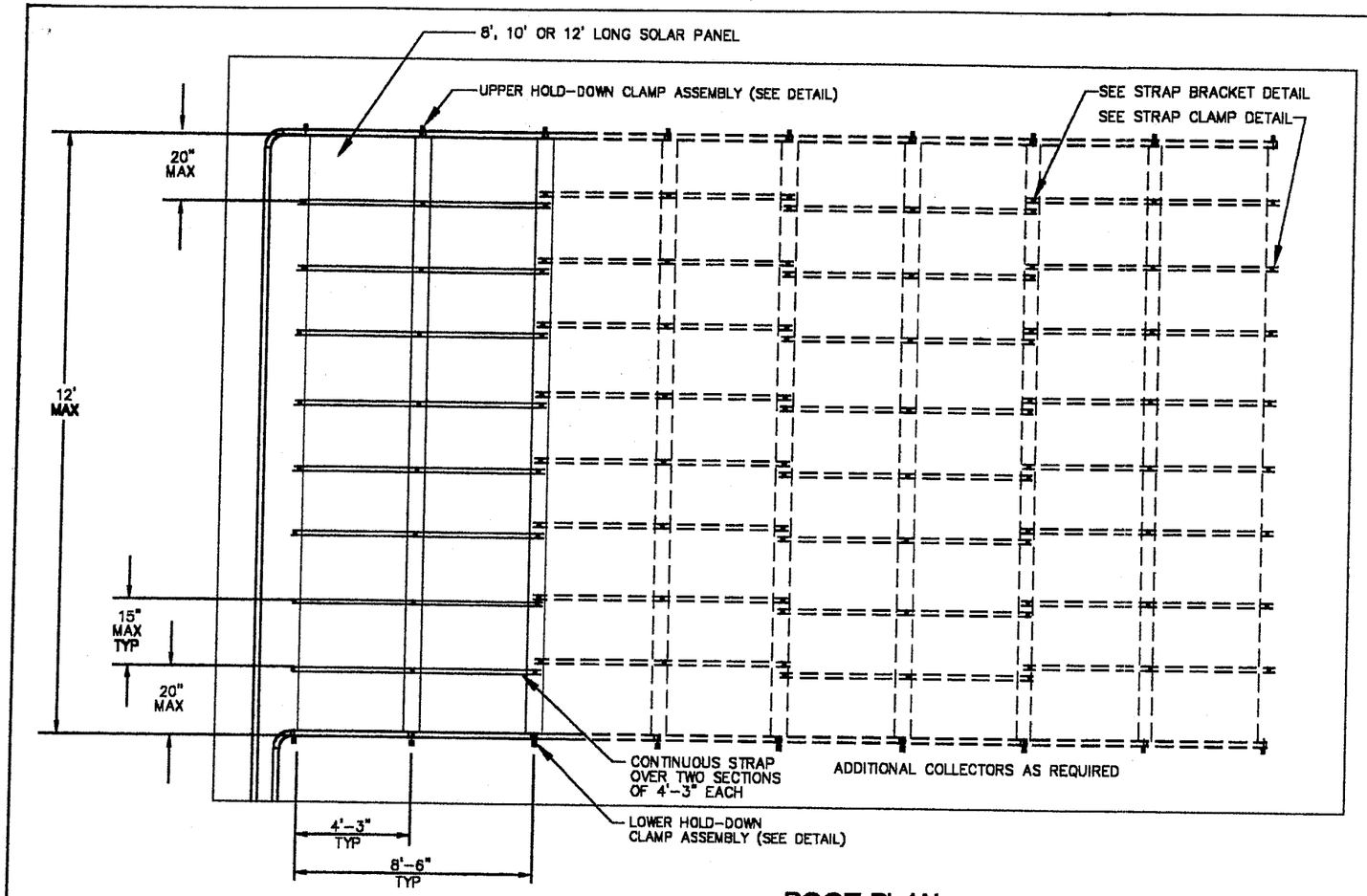

ROOF PLAN

NOTES:

1) THE SOLAR COLLECTOR INSTALLATION AS DETAILED IN THE DRAWINGS IS FOR THE INSTALLATION OF POOL HEATING SYSTEMS ON RESIDENTIAL STRUCTURES FOR A MAXIMUM DESIGN PRESSURE OF −41.8 PSF. ROOF SLOPES BETWEEN 10 AND 30 DEGREES.

2) THE DESIGN OF THIS INSTALLATION SHALL BE BASED ON ASCE 7-88.

3) THE INSTALLATION SHALL UTILIZE HARDWARE PROVIDED BY THE MANUFACTURER AS DETAILED IN THE INSTALLATION MANUAL.

4) THIS DESIGN TO BE USED ON RESIDENTIAL BUILDINGS USING PLYWOOD SHEATHING, 5/8" MINIMUM THICKNESS. FOR ROOFS USING ALTERNATIVE MATERIALS SITE SPECIFIC INSPECTION AND DESIGN IS REQUIRED.

5) MOUNTING SCREWS TO BE AISI 304 STAINLESS STEEL (SS)

DESIGN PRESSURE RATING
±41.8 PSF
NO IMPACT REQUIREMENT

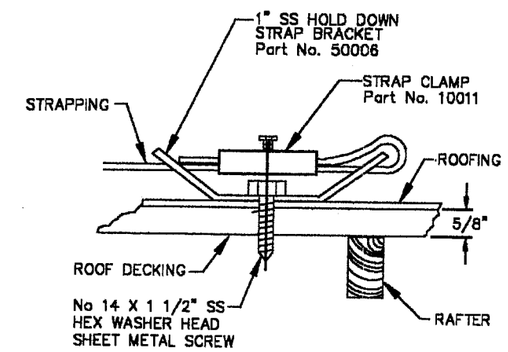

STRAP CLAMP DETAIL

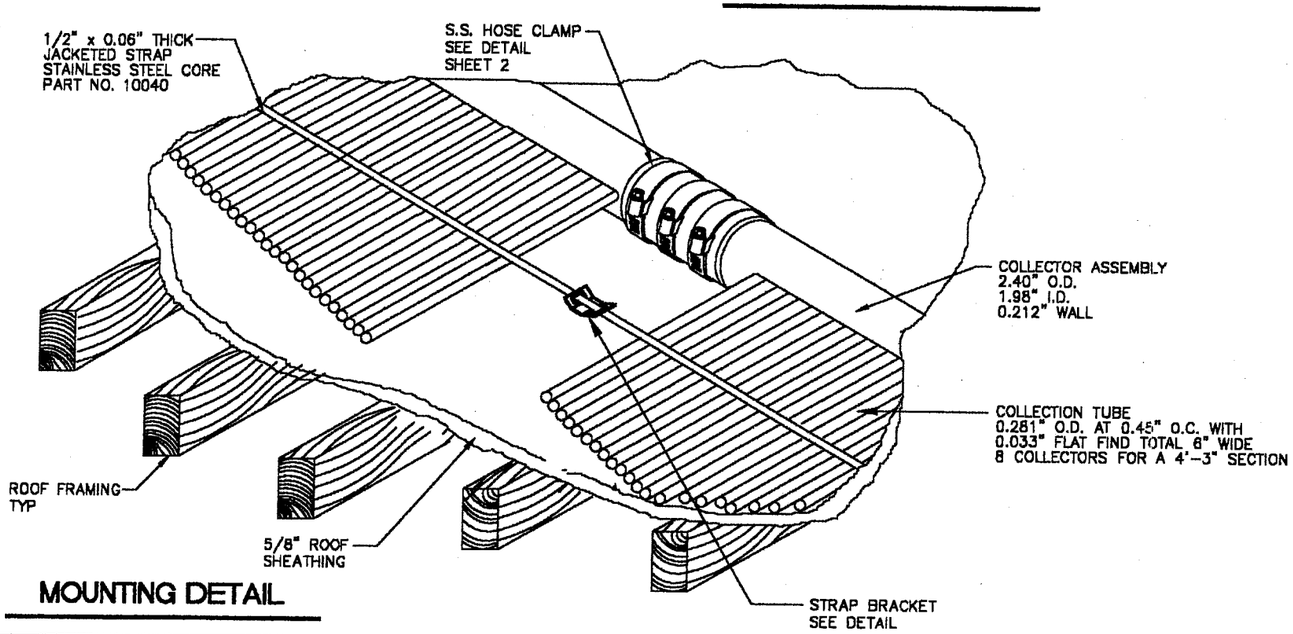

MOUNTING DETAIL

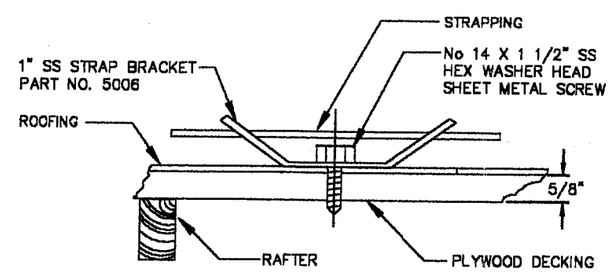

STRAP BRACKET DETAIL

APPROVED AS COMPLYING WITH THE SOUTH FLORIDA BUILDING CODE
DATE December 21, 2000
BY
PRODUCT CONTROL DIVISION
BUILDING CODE COMPLIANCE OFFICE
ACCEPTANCE NO. 00-0915.01

NO.	REVISION	DATE
4		
3		
2		
1	DESIGN PRESSURE RATING ADDITION	11/24/00

HEALEY & ASSOCIATES
120 VENETIAN WAY, SUITE 16
MERRITT ISLAND, FLORIDA 32953
(407) 452-2173
ENGINEERING CONSULTANTS

AQUATHERM INDUSTRIES, INC.
1985 RUTGERS UNIVERSITY BLVD
LAKEWOOD, NEW JERSEY 08701

DRAWING TITLE
INSTALLATION DETAILS
SOLAR HEATING SYSTEM
FOR SWIMMING POOLS

SEAL 11/24/00

DRAWN MJT	PROJECT NO.
CHECKED HMH	DRAWING NO. MD-1
DATE 9/22/96	
SCALE NOTED	SHEET 1 OF 3

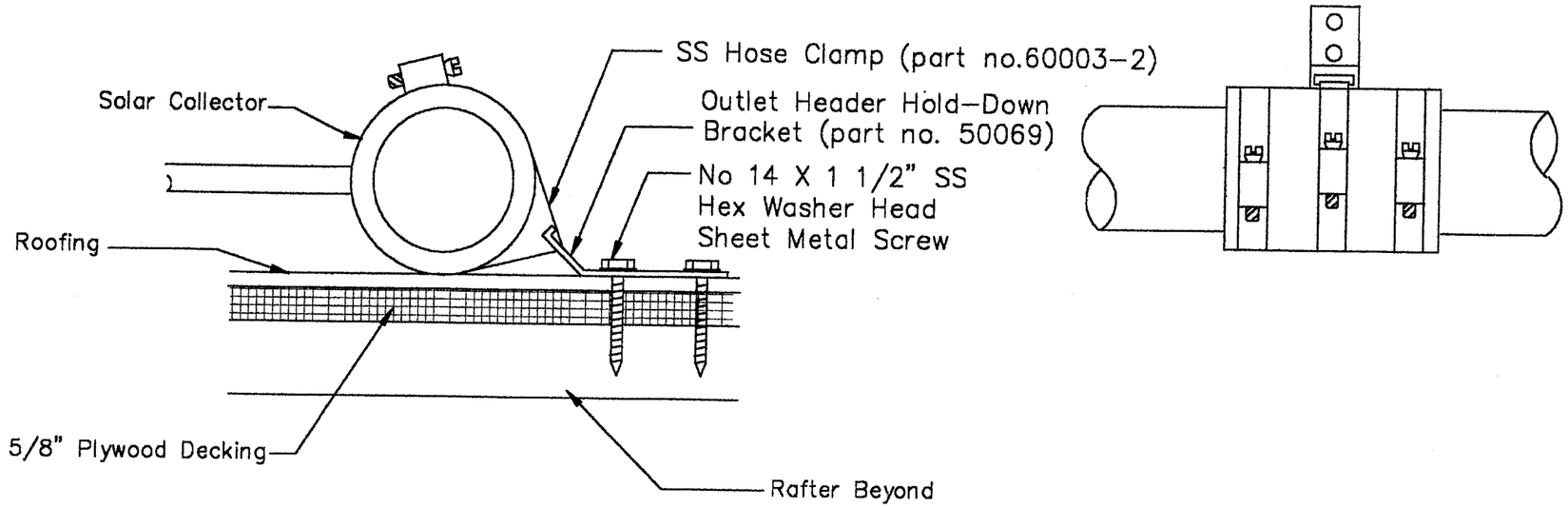

UPPER CLAMP ASSEMBLY DETAIL

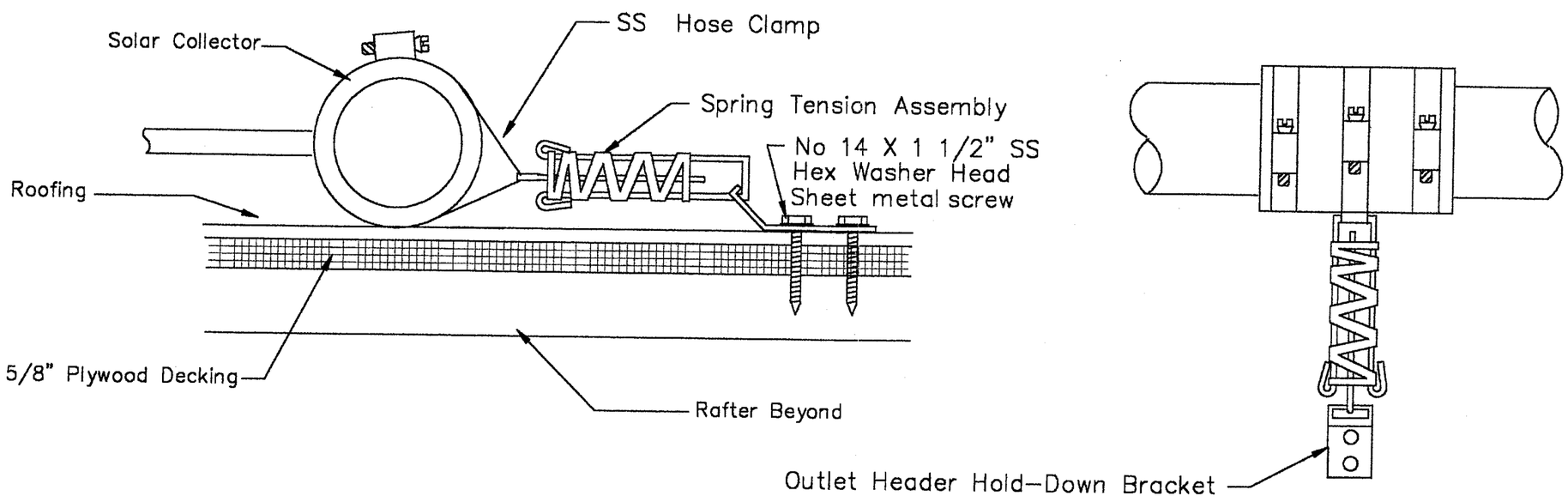

LOWER CLAMP ASSEMBLY DETAIL

APPROVED AS COMPLYING WITH THE SOUTH FLORIDA BUILDING CODE
DATE December 21, 2000
BY
PRODUCT CONTROL DIVISION
BUILDING CODE COMPLIANCE OFFICE
ACCEPTANCE NO. 00-0915.01

NO.	REVISION	DATE
4		
3		
2		
1		

HEALEY & ASSOCIATES
ENGINEERING CONSULTANTS
120 VENETIAN WAY, SUITE 16
MERRITT ISLAND, FLORIDA 32953
(407) 452-2178

AQUATHERM INDUSTRIES,INC
1985 RUTGERS UNIVERSITY BLVD
LAKEWOOD, NEW JERSEY 08701

DRAWING TITLE
INSTALLATION DETAILS
SOLAR HEATING SYSTEM
FOR SWIMMING POOLS

SEAL 11/29/00

DRAWN CPH	PROJECT NO.
CHECKED HMH	DRAWING NO.
DATE 11/6/95	MD-2
SCALE NOTED	SHEET 2 OF 3

AQUATWO

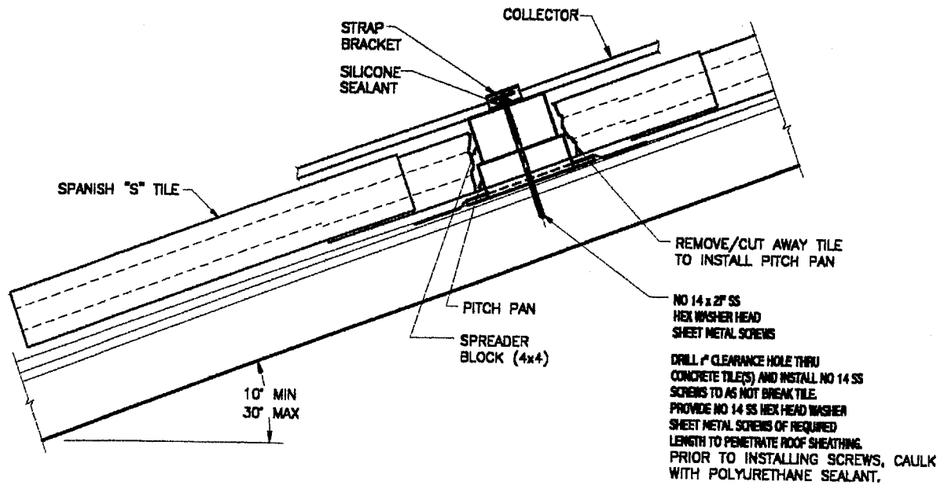

SLOPED HIGH PROFILE TILE ROOF

N.T.S.

NOTE: SEAL ALL PENETRATIONS WITH POLYURETHANE

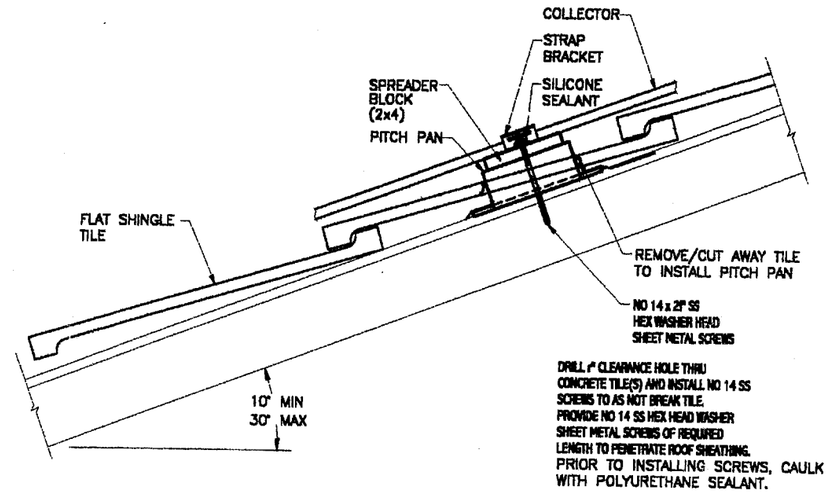

SLOPED LOW PROFILE TILE ROOF

N.T.S.

NOTE: SEAL ALL PENETRATIONS WITH POLYURETHANE

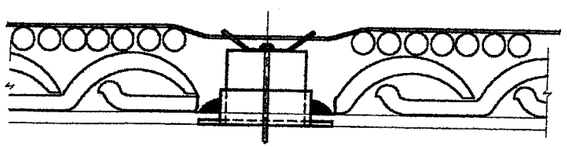

SLOPED HIGH PROFILE TILE ROOF - END VIEW

N.T.S.

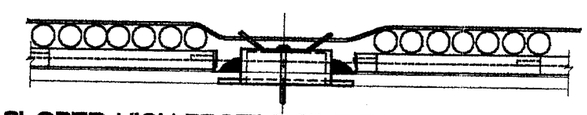

SLOPED HIGH PROFILE TILE ROOF - END VIEW

N.T.S.

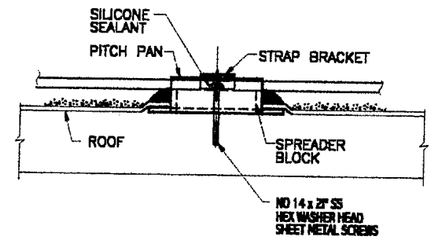

FLAT ROOF

N.T.S.

NOTE: SEAL ALL PENETRATIONS WITH POLYURETHANE
ALL ROOF PENETRATIONS TO BE FLASHED PER NRCA RECOMMENDATIONS

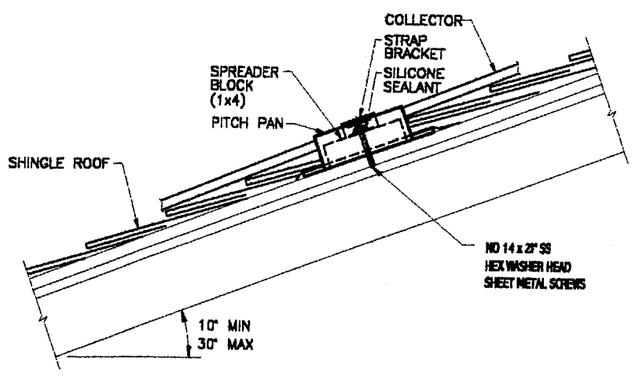

SLOPED SHINGLE ROOF

N.T.S.

NOTE: SEAL ALL PENETRATIONS WITH POLYURETHANE

MODELS INCLUDED IN THIS APPROVAL

MODEL NO.	16204-12	16204-10	16204-8
NOMINAL SIZE	4' x 12'	4' x 10'	4' x 8'
LENGTH	12.04 FT	10.04 FT	8.04 FT
WIDTH	3.92 FT	3.92 FT	3.92 FT
DEPTH	0.03 FT	0.03 FT	0.03 FT
AREA	47.20 SF	39.36 SF	31.51 SF
WEIGHT	22.7 #	19 #	16.1 #
FLOW RATE	4.8 GPM	4.0 GPM	3.3 GPM
OPERATIVE PRESSURE	35 PSI	35 PSI	35 PSI
ENERGY OUTPUT @ 35 F	47,700 BTU/DAY	39,800 BTU/DAY	31.800 BTU/DAY

Consisting of typical sections 4'-3" wide and variable length of 8', 10', & 12' long, which can be repeated with additional sections as necessary

APPROVED AS COMPLYING WITH THE SOUTH FLORIDA BUILDING CODE
DATE December 21, 2000
BY
PRODUCT CONTROL DIVISION
BUILDING CODE COMPLIANCE OFFICE
ACCEPTANCE NO. 00-0915.01

NO.	REVISION	DATE
4		
3		
2		
1	MODELS APPROVED & MATERIALS	11/24/00

HEALEY & ASSOCIATES
120 VENETIAN WAY, SUITE 16
MERRITT ISLAND, FLORIDA 32953
(407) 452-2073
ENGINEERING CONSULTANTS

AQUATHERM INDUSTRIES, INC.
1985 RUTGERS UNIVERSITY BLVD
LAKEWOOD, NEW JERSEY 08701

DRAWING TITLE
INSTALLATION DETAILS
SOLAR HEATING SYSTEM
FOR SWIMMING POOLS

SEAL 11/24/00
DRAWN MJT
CHECKED HMH
DATE 9/22/96
SCALE NOTED
PROJECT NO.
DRAWING NO. MD3
SHEET 3 OF 3