MIAMI-DADE

MIAMI-DADE COUNTY, FLORIDA
METRO-DADE FLAGLER BUILDING

BUILDING CODE COMPLIANCE OFFICE
METRO-DADE FLAGLER BUILDING
140 WEST FLAGLER STREET, SUITE 1603
MIAMI, FLORIDA 33130-1563
(305) 375-2901 FAX (305) 375-2908

CONTRACTOR LICENSING SECTION
(305) 375-2527 FAX (305) 375-2558

CONTRACTOR ENFORCEMENT DIVISION
(305) 375-2966 FAX (305) 375-2908

PRODUCT CONTROL DIVISION
(305) 375-2902 FAX (305) 372-6339

PRODUCT CONTROL NOTICE OF ACCEPTANCE

Florida Screen Enterprises
15201 N.W. 34 Avenue
Opa Locka ,FL 33054-2449

Your application for Notice of Acceptance (NOA) of:
"Big Ben 2" Aluminum Accordion Shutter
under Chapter 8 of the Code of Miami-Dade County governing the use of Alternate Materials and Types of Construction, and completely described herein, has been recommended for acceptance by the Miami-Dade County Building Code Compliance Office (BCCO) under the conditions specified herein.

This NOA shall not be valid after the expiration date stated below. BCCO reserves the right to secure this product or material at any time from a jobsite or manufacturer's plant for quality control testing. If this product or material fails to perform in the approved manner, BCCO may revoke, modify, or suspend the use of such product or material immediately. BCCO reserves the right to revoke this approval, if it is determined by BCCO that this product or material fails to meet the requirements of the South Florida Building Code.

The expense of such testing will be incurred by the manufacturer.

ACCEPTANCE NO.: 00-0919.01
EXPIRES: 09/09/2003

Raul Rodriguez
Chief Product Control Division

THIS IS THE COVERSHEET, SEE ADDITIONAL PAGES FOR SPECIFIC AND GENERAL CONDITIONS
BUILDING CODE & PRODUCT REVIEW COMMITTEE

This application for Product Approval has been reviewed by the BCCO and approved by the Building Code and Product Review Committee to be used in Miami-Dade County, Florida under the conditions set forth above.

Francisco J. Quintana, R.A.
Director
Miami-Dade County
Building Code Compliance Office

APPROVED: 10/30/2000

Florida Screen Enterprises

ACCEPTANCE No. : 00-0919.01

APPROVED : 10/30/2000

EXPIRES : 09/09/2003

NOTICE OF ACCEPTANCE: SPECIFIC CONDITIONS

1. SCOPE

This renews the Notice of Acceptance No. 98-0722.03, which was issued on October 19, 1998. It approves an aluminum accordion type shutter, as described in Section 2 of this Notice of Acceptance, designed to comply with the South Florida Building Code, 1994 Edition for Miami-Dade County, for the locations where the pressure requirements, as determined by SFBC Chapter 23, do not exceed the Design Pressure Rating values indicated in the approved drawings.

2. PRODUCT DESCRIPTION

This aluminum accordion type shutter and its components shall be constructed in strict compliance with the following documents: Drawing No. 98-142, titled "BIG BEN 2 / ACCORDION SHUTTER," prepared by Tilteco Inc., dated June 3, 1998, sheets 1 through 8 of 8, bearing the Miami-Dade County Product Control Approval and Renewal stamps with the Notice of Acceptance numbers and approval dates by the Miami-Dade County Product Control Division. These documents shall hereinafter be referred to as the approved drawings.

3. LIMITATIONS

All permanent set components, included but not limited to embedded anchor bolts, threaded cones, metal shields, headers and sills, must be protected against corrosion, contamination and damage at all times.

4. INSTALLATION

This aluminum accordion type shutter and its components shall be installed in strict compliance with the approved drawings.

5. LABELING

Each unit shall bear a permanent label with the manufacturer's name or logo, city, state and the following statement: "Miami-Dade County Product Control Approved".

6. BUILDING PERMIT REQUIREMENTS

6.1 Application for building permit shall be accompanied by copies of the following:

6.1.1 This Notice of Acceptance.

6.1.2 Duplicate copies of the approved drawings, as identified in Section 2 of this Notice of Acceptance, clearly marked to show the components selected for the proposed installation.

6.1.3 Any other documents required by the Building Official or the South Florida Building Code (SFBC) in order to properly evaluate the installation of this system.

Helmy A. Makar

Helmy A. Makar, P.E.- Product Control Examiner
Product Control Division

Florida Screen Enterprises

ACCEPTANCE No. : 00-0919.01

APPROVED : 10/30/2000

EXPIRES : 09/09/2003

NOTICE OF ACCEPTANCE: STANDARD CONDITIONS

1 Renewal of this Acceptance (approval) shall be considered after a renewal application has been filed and the original submitted documents, including test-supporting data, engineering documents, are no older than eight (8) years.

2. Any and all approved products shall be permanently labeled with the manufacturer's name, city, state, and the following statement: "Miami-Dade County Product Control Approved", or as specifically stated in the specific conditions of this Acceptance.

3. Renewals of Acceptance will not be considered if:
   a. There has been a change in the South Florida Building Code affecting the evaluation of this product and the product is not in compliance with the code changes.
   b. The product is no longer the same product (identical) as the one originally approved.
   c. If the Acceptance holder has not complied with all the requirements of this acceptance, including the correct installation of the product.
   d. The engineer, who originally prepared, signed and sealed the required documentation initially submitted, is no longer practicing the engineering profession.

4. Any revision or change in the materials, use, and/or manufacture of the product or process shall automatically be cause for termination of this Acceptance, unless prior written approval has been requested (through the filing of a revision application with appropriate fee) and granted by this office.

5. Any of the following shall also be grounds for removal of this Acceptance:
   a. Unsatisfactory performance of this product or process.
   b. Misuse of this Acceptance as an endorsement of any product, for sales, advertising or any other purposes.

6. The Notice of Acceptance number preceded by the words Miami-Dade County, Florida, and followed by the expiration date may be displayed in advertising literature. If any portion of the Notice of Acceptance is displayed, then it shall be done in its entirety.

7. A copy of this Acceptance as well as approved drawings and other documents, where it applies, shall be provided to the user by the manufacturer or its distributors and shall be available for inspection at the job site at all time. The engineer needs not reseal the copies.

8. Failure to comply with any section of this Acceptance shall be cause for termination and removal of Acceptance.

9. This Notice of Acceptance consists of pages 1, 2 and this last page 3.

END OF THIS ACCEPTANCE

Helmy A. Makar

Helmy A. Makar, P.E.- Product Control Examiner
Product Control Division

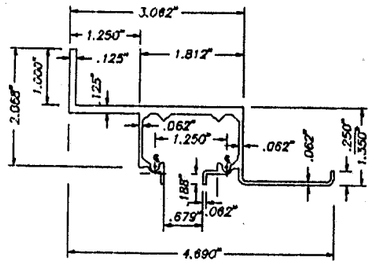

(A) HEADER – WALL MOUNTING
(A) SILL – WALL MOUNTING (INVERTED USE)
SCALE: 3/8" = 1"

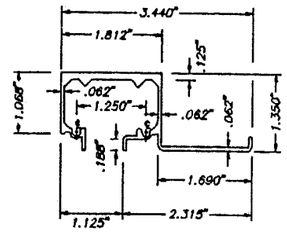

(B) HEADER – CEILING MOUNTING
SCALE: 3/8" = 1"

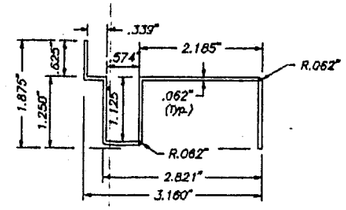

(C) THRESHOLD SILL
SCALE: 3/8" = 1"

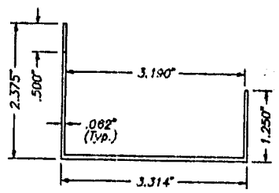

(D) SILL BOTTOM ADAPTER
SCALE: 3/8" = 1"

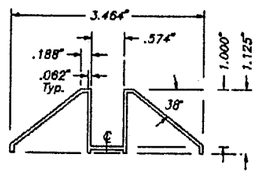

(C1) THRESHOLD TRACK (FLOOR TRACK)
SCALE: 3/8" = 1"

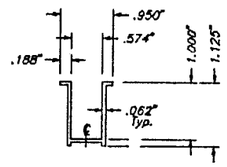

(C2) THRENCH THRESHOLD TRACK
SCALE: 3/8" = 1"

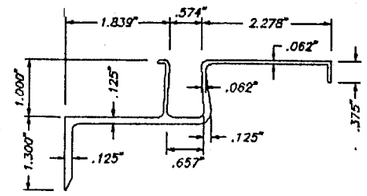

(C3) BOTTOM BUILT-OUT
SCALE: 3/8" = 1"

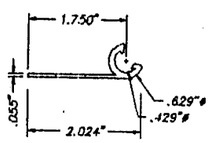

(E) 180° STARTER
SCALE: 3/8" = 1"

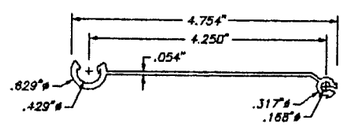

(F) LOUVER BLADE
6005-T5 ALLOY
SCALE: 3/8" = 1"

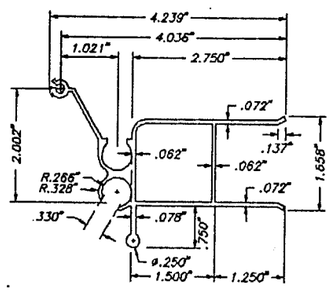

(G) FEMALE LOCK SLAT
SCALE: 3/8" = 1"

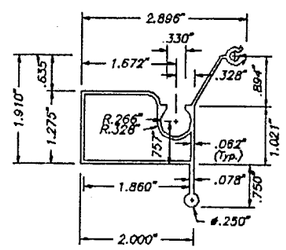

(H) MALE LOCK SLAT
SCALE: 3/8" = 1"

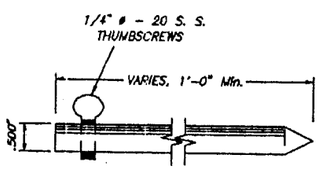

(I) LOCKING PIN
SCALE: 3/8" = 1"

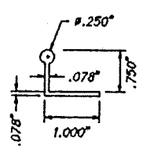

(J) 4" HANDLE (OPTIONAL)
SCALE: 3/8" = 1"

COMPONENTS

GENERAL NOTES:

1. ACCORDION SHUTTER HAS BEEN DESIGNED IN ACCORDANCE WITH THE DADE COUNTY, 1994 EDITION OF THE SOUTH FLORIDA BUILDING CODE.
   DESIGN WIND LOADS SHALL BE DETERMINED AS PER SECTION 6 OF ASCE 7-88, WITH 110 m.p.h. BASIC WIND SPEED.
   ACCORDION SHUTTER'S ADEQUACY FOR IMPACT AND FATIGUE RESISTANCE HAS BEEN VERIFIED IN ACCORDANCE WITH SECTIONS 2315 & 2314 RESPECTIVELY OF THE ABOVE MENTIONED CODE.
2. STAINLESS STEEL SHEET METAL SCREWS USED AT LOUVER PIN SHALL BE # 10 x 3". 410-HT MINIMUM SERIES W/ 135.0 ksi YIELD POINT & 180 ksi TENSILE STRENGTH. SCREWS SHALL BE COATED WITH XYLAN 5000 SERIES FLUOROPOLYMER COATINGS AS MANUFACTURED BY WHITFORD Co, BOX 507, WEST CHESTER PA. 19381.
3. ALL ALUMINUM EXTRUSIONS SHALL BE 6063-T6 ALLOY (UNLESS OTHERWISE NOTED).
4. ALL SCREWS TO BE STAINLESS STEEL 304 OR 316 SERIES W/ 50 ksi YIELD POINT AND 90 ksi TENSILE STRENGTH.
5. ALL ALUMINUM POP RIVETS TO BE 5052 ALUMINUM ALLOY WITH ALUMINUM MANDREL.
6. BOLTS TO BE 2024-T4 ALUMINUM ALLOY GALVANIZED OR STAINLESS STEEL WITH 35 ksi MINIMUM MINIMUM YIELD POINT.
7. ANCHORS TO WALL SHALL BE AS FOLLOWS: (UNLESS OTHERWISE NOTED)
   (A) TO EXISTING POURED CONCRETE:
   - 1/4" ø TAPCON ANCHORS, AS MANUFACTURED BY I.T.W. RAMSET OR ELCO INDUSTRIES, INC.
   - 1/4" ø x 7/8" RAWL CALK-IN, AS MANUFACTURED BY THE RAWL PLUG COMPANY, INC.

   NOTES:

   A.1) MINIMUM EMBEDMENT OF TAPCON ANCHORS INTO THE POURED CONCRETE SHALL BE 1 3/4".

   A.2) 7/8" RAWL CALK-IN ANCHORS SHALL BE ENTIRELY EMBEDDED INTO THE POURED CONCRETE. NO EMBEDMENT INTO STUCCO SHALL BE PERMITTED.
   1/4" ø-20 SCREWS USED SHALL BE 2" LONG MINIMUM SHOULD STUCCO EXIST.

   A.3) IN CASE THAT PRECAST STONE, PRECAST CONCRETE PANELS, OR PAVERS BE FOUND ON THE EXISTING WALL OR FLOOR, ANCHORS SHALL BE LONG ENOUGH TO REACH THE MAIN STRUCTURE BEHIND SUCH PANELS. ANCHORAGE SHALL BE 1 3/4" MINIMUM FOR ANCHORS MENTIONED IN A.1). & 7/8" FOR ANCHORS MENTIONED IN A.2).

   (B) TO EXISTING CONCRETE BLOCK WALL:
   - 1/4" ø TAPCON ANCHORS AS MANUFACTURED BY I.T.W. RAMSET OR ELCO INDUSTRIES, INC.

   NOTES:

   B.1) MINIMUM EMBEDMENT OF TAPCON ANCHORS INTO THE CONCRETE BLOCK UNIT SHALL BE 1 1/4"

   B.2) IN CASE THAT PRECAST STONE OR PRECAST CONCRETE PANELS BE FOUND ON THE EXISTING WALL, ANCHORS SHALL BE LONG ENOUGH TO REACH THE MAIN STRUCTURE BEHIND SUCH PANELS. ANCHORAGE SHALL BE 1 1/4" MINIMUM FOR ANCHORS MENTIONED IN B.1.).

   (C) ANCHORS SHALL BE INSTALLED FOLLOWING ALL OF THE RECOMENDATIONS AND SPECIFICATIONS OF THE ANCHOR'S MANUFACTURER.
8. IT SHALL BE THE RESPONSIBILITY OF THE CONTRACTOR TO VERIFY THE SOUNDNESS OF THE STRUCTURE WHERE SHUTTER IS TO BE ATTACHED TO INSURE PROPER ANCHORAGE. THIS SHUTTER SHALL ONLY BE ATTACHED TO CONCRETE, BLOCK OR WOOD FRAME BUILDINGS.
9. SHUTTER'S MANUFACTURER STAMP SHALL BE PLACED ON THE EXPOSED SURFACE OF THE FEMALE LOCK SLAT (COMPONENT (G)).
   ONE LABEL SHALL BE PLACED FOR EVERY OPENING. LABEL SHALL READ AS FOLLOWS:
   FLORIDA SCREEN ENTERPRISES
   OPA-LOCKA, FLORIDA
   DADE COUNTY PRODUCT CONTROL APPROVED.

PRODUCT RENEWED
ACCEPTANCE No. 00-0919.01
EXPIRATION DATE 09/09/2003
By Helmy A. Maher
PRODUCT CONTROL DIVISION
BUILDING CODE COMPLIANCE OFFICE

APPROVED AS COMPLYING WITH THE SOUTH FLORIDA BUILDING CODE
DATE October 19, 1998
BY Helmy A. Maher
PRODUCT CONTROL DIVISION
BUILDING CODE COMPLIANCE OFFICE
ACCEPTANCE NO. 98-0722.03

#98-0722.03

7/3/98

DADE COUNTY

TILTECO INC.
TILLIT TESTING & ENGINEERING COMPANY
6595 N.W. 36th. St., Ste. 217, VIRGINIA GARDENS, FL 33166
Phone : (305)871-1530 . Fax : (305)871-1531
WALTER A. TILLIT Jr. P. E.
FLORIDA Lic. # 44167

BIG BEN 2 / ACCORDION SHUTTER

FLORIDA SCREEN ENTERPRISES
15201 N.W. 34th. AVENUE
OPA-LOCKA, FLORIDA 33054

REV. No	DESCRIPTION	DATE	REV. No	DESCRIPTION	DATE
1	–	–	3		
2	–	–	4		

AS SHOWN SCALE
6/03/98 DATE
98 – 142 DRAWING No
SHEET 1 OF 8

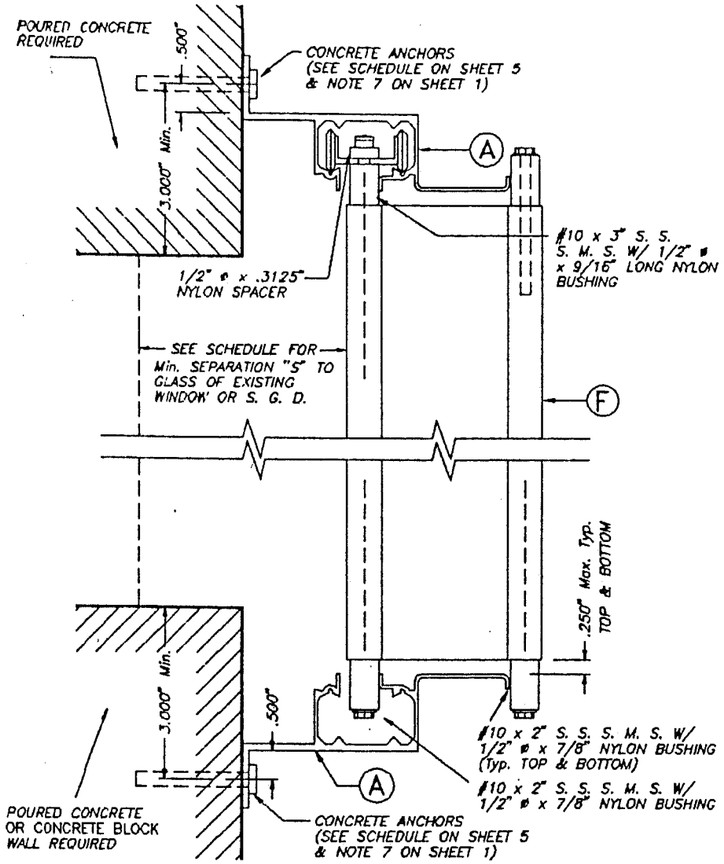

WALL MOUNTING INSTALLATION

– SECTION A

SCALE : 3/8" = 1'

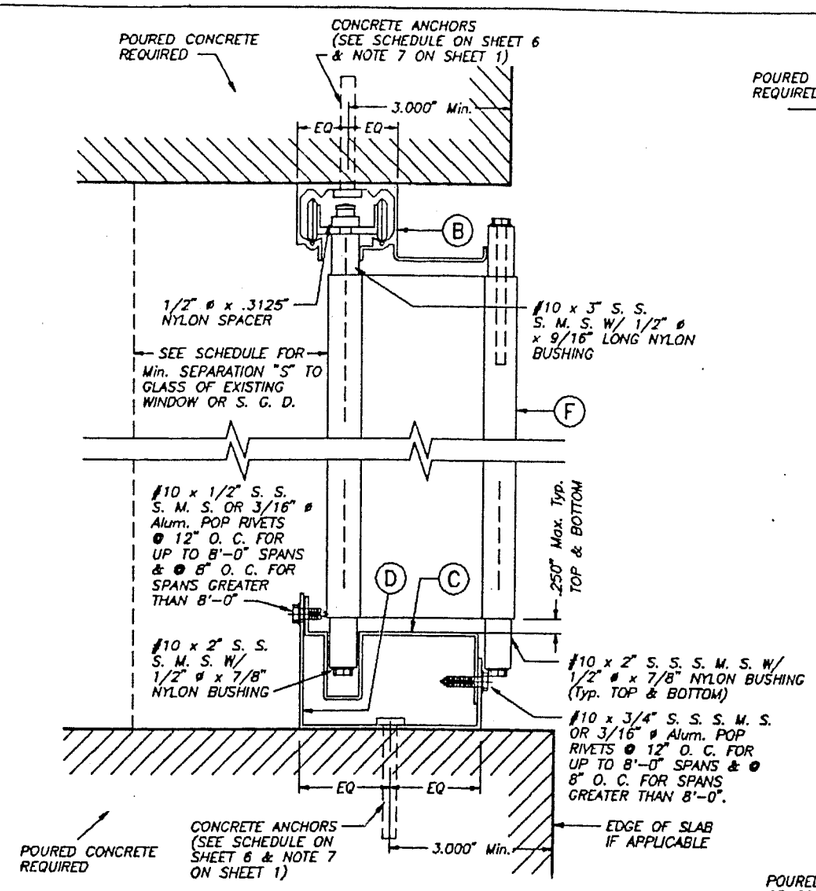

CEILING & FLOOR MOUNT. INSTALLAT.

– SECTION B

SCALE : 3/8" = 1'

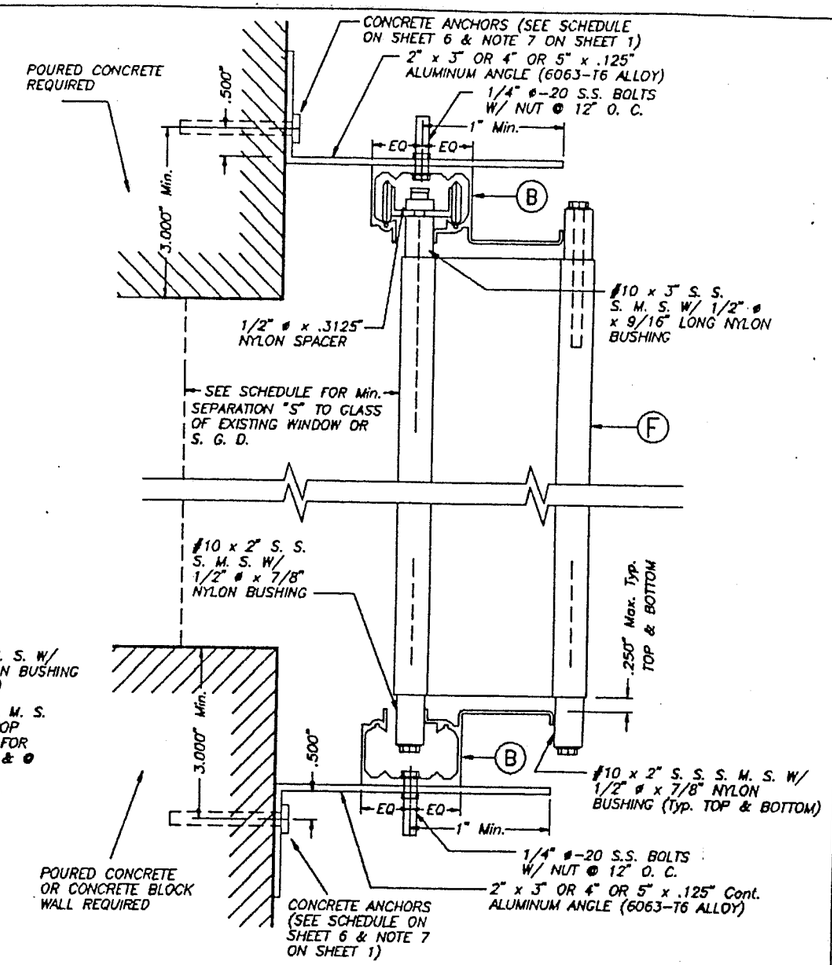

WALL MOUNTING INSTALLATION (OFFSET)

– SECTION C

SCALE : 3/8" = 1'

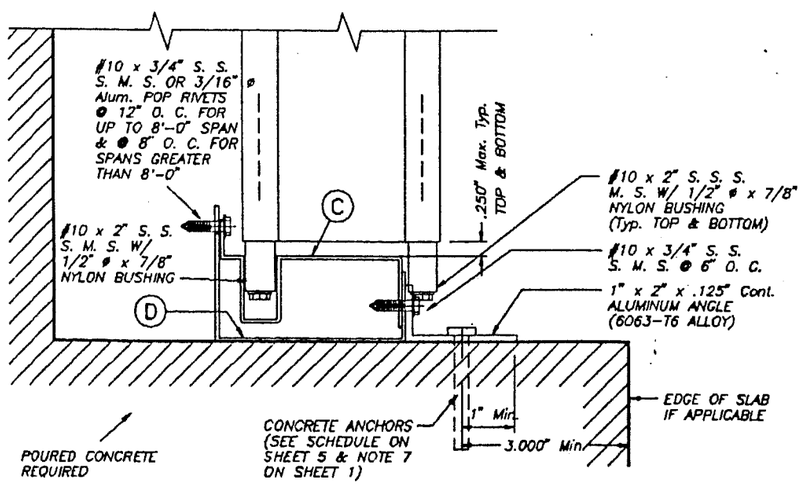

REMOVABLE FLOOR MOUNTING INSTALLATION

– SECTION B'

SCALE : 3/8" = 1'

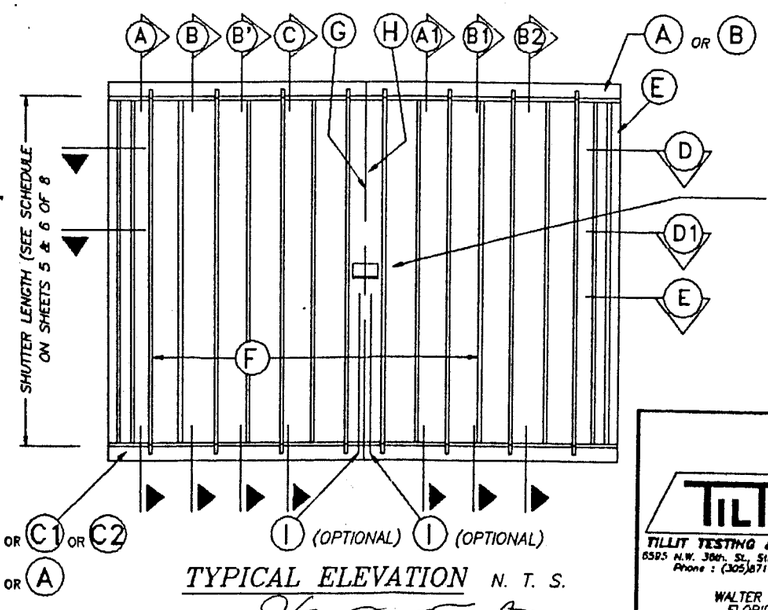

TYPICAL ELEVATION

N. T. S.

APPROVED AS COMPLYING W'TH THE SOUTH FLORIDA BUILDING CODE
DATE October 19 1998
By Helmy A. Maker
PRODUCT CONTROL DIVISION
BUILDING CODE COMPLIANCE OFFICE
ACCEPTANCE NO. 98-0722.03

PRODUCT RENEWED

ACCEPTANCE No. 00-0919.01
EXPIRATION DATE 09/09/2003
By Helmy A. Maker
PRODUCT CONTROL DIVISION
BUILDING CODE COMPLIANCE OFFICE

DADE COUNTY

TILTECO INC.
TILLIT TESTING & ENGINEERING COMPANY
6595 N.W. 30th. St., Ste. 217, VIRGINIA GARDENS, FL 33166
Phone : (305)871-1530 . Fax : (305)871-1531
WALTER A. TILLIT Jr. P. E.
FLORIDA Lic. # 44167

BIG BEN 2 / ACCORDION SHUTTER

FLORIDA SCREEN ENTERPRISES
15201 N.W. 34th. AVENUE
OPA-LOCKA, FLORIDA 33054

REV. No	DESCRIPTION	DATE	REV. No	DESCRIPTION	DATE
1	–	–	3		
2	–	–	4		

AS SHOWN SCALE
6/03/98 DATE
98 – 142 DRAWING No
SHEET 2 OF 8

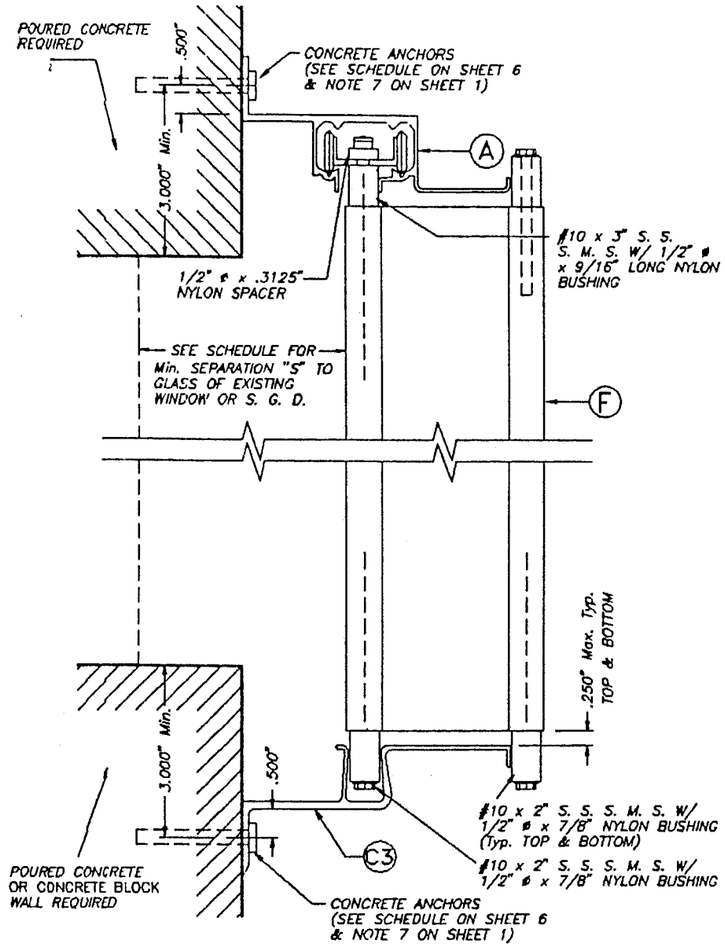

WALL MOUNTING INSTALLATION

– SECTION A1

SCALE : 3/8" = 1'

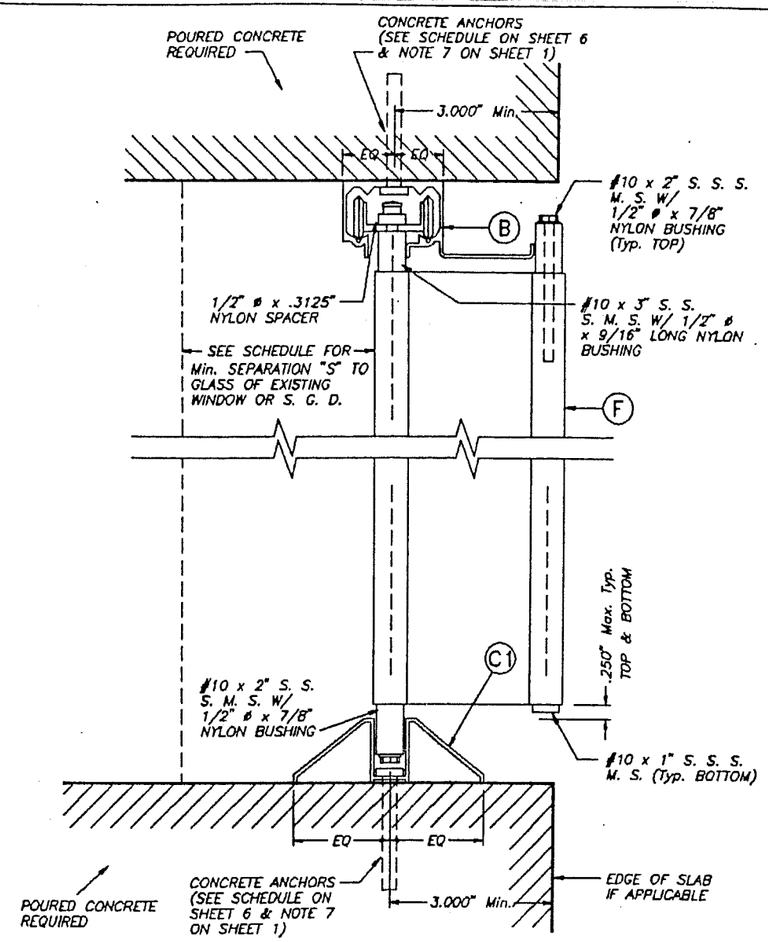

CEILING & FLOOR MOUNT. INSTALLAT.

– SECTION B1

SCALE : 3/8" = 1'

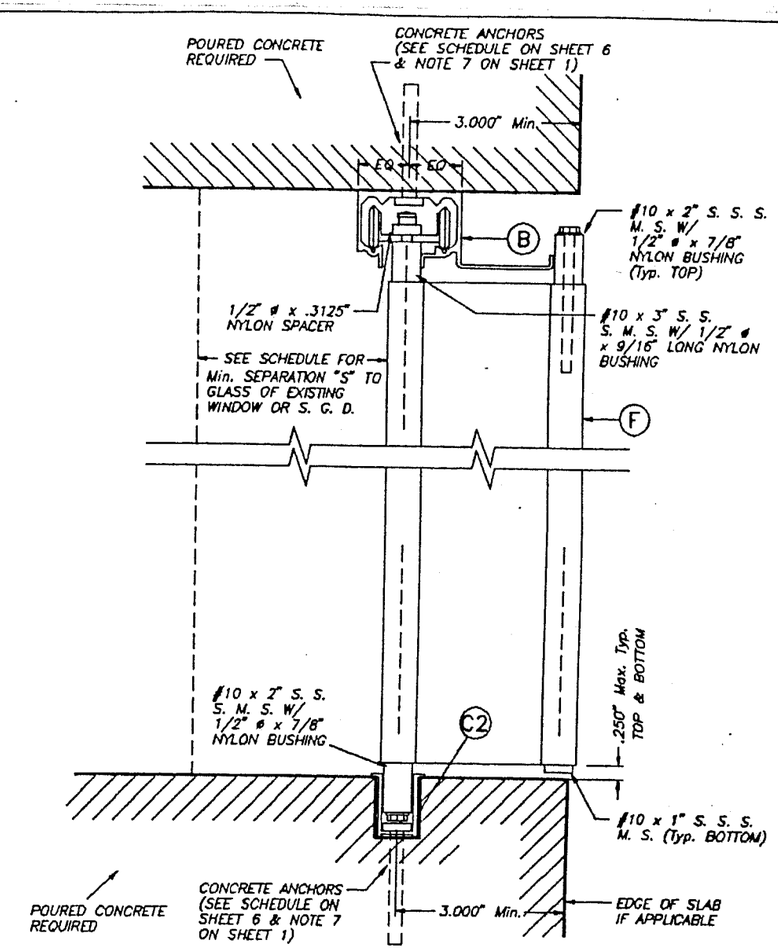

CEILING & FLOOR MOUNT. INSTALLAT.

– SECTION B2

SCALE : 3/8" = 1'

PRODUCT RENEWED

ACCEPTANCE No. 00-0919.01

EXPIRATION DATE 09/09/2003

By Helmy A. Maker

PRODUCT CONTROL DIVISION
BUILDING CODE COMPLIANCE OFFICE

APPROVED AS COMPLYING WITH THE SOUTH FLORIDA BUILDING CODE

DATE October 19 19 98

BY Helmy A. Maker

PRODUCT CONTROL DIVISION
BUILDING CODE COMPLIANCE OFFICE

ACCEPTANCE NO. 98-0722.03

DADE COUNTY

TILTECO INC.

TILLIT TESTING & ENGINEERING COMPANY
6595 N.W. 36th. St., Ste. 217, VIRGINIA GARDENS, Fl. 33166
Phone : (305)871-1530 . Fax : (305)871-1531

WALTER A. TILLIT Jr. P. E.
FLORIDA Lic. # 44167

BIG BEN 2 / ACCORDION SHUTTER

FLORIDA SCREEN ENTERPRISES
15201 N.W. 34th. AVENUE
OPA-LOCKA, FLORIDA 33054

REV. No	DESCRIPTION	DATE	REV. No	DESCRIPTION	DATE
1	–	–	3		
2	–	–	4		

AS SHOWN
SCALE

6/03/98
DATE

98 – 142
DRAWING No

SHEET 3 OF 8

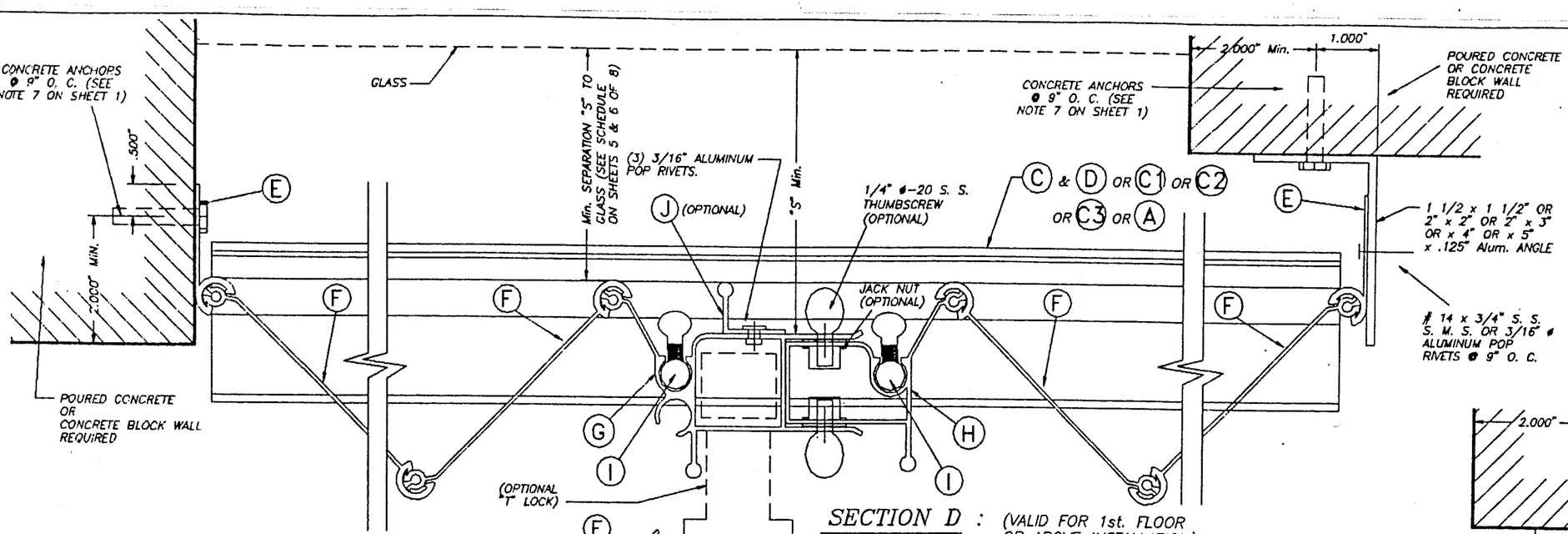

NOTE ON LOCK:

"T" LOCK AND/OR JACK NUTS W/ 1/4" ø-20 S. S. THUMBSCREWS ARE OPTIONAL, i. e. THEY ARE NOT REQUIRED AS A INTEGRAL PART OF CENTERMATES STRUCTURAL ADEQUACY.

SECTION D : (VALID FOR 1st. FLOOR OR ABOVE INSTALLATION).

SCALE: 1/2" = 1"

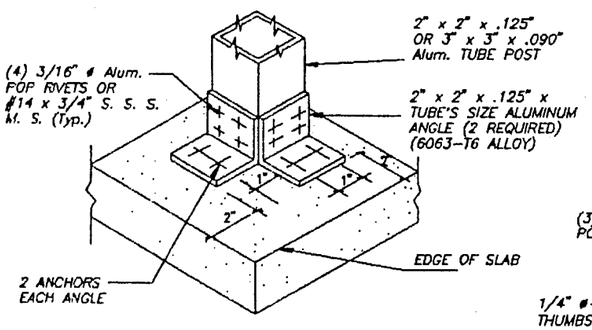

ISOMETRIC (CORNER POST)

(Typ. AT TOP & BOTTOM SLABS)

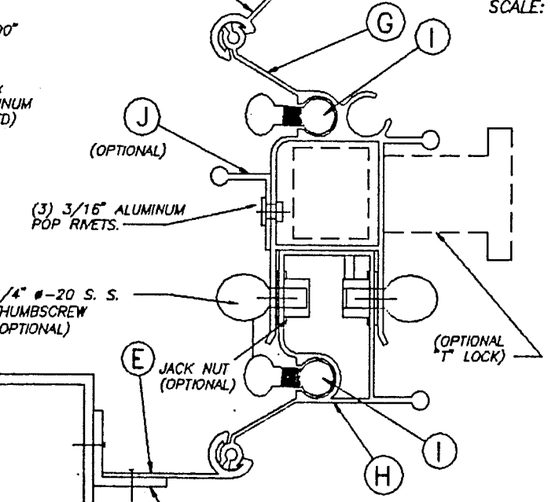

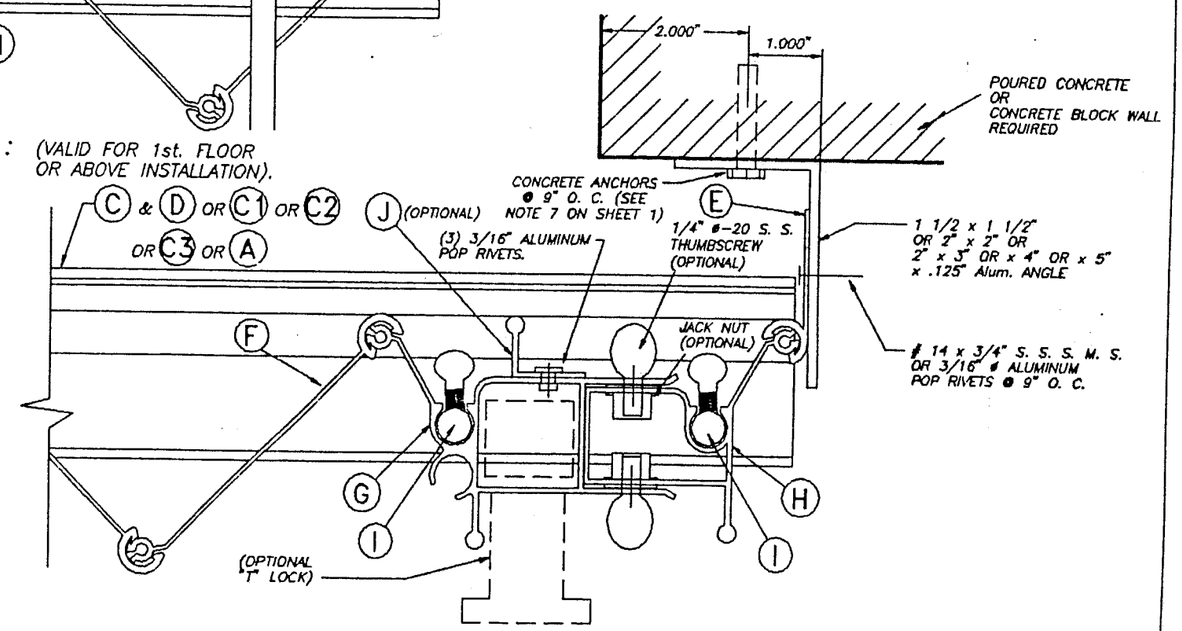

ONE SIDED SHUTTER: END CONNECTION DETAIL (VALID FOR 1st. FLOOR OR ABOVE INSTALLATION).

SCALE: 1/2" = 1"

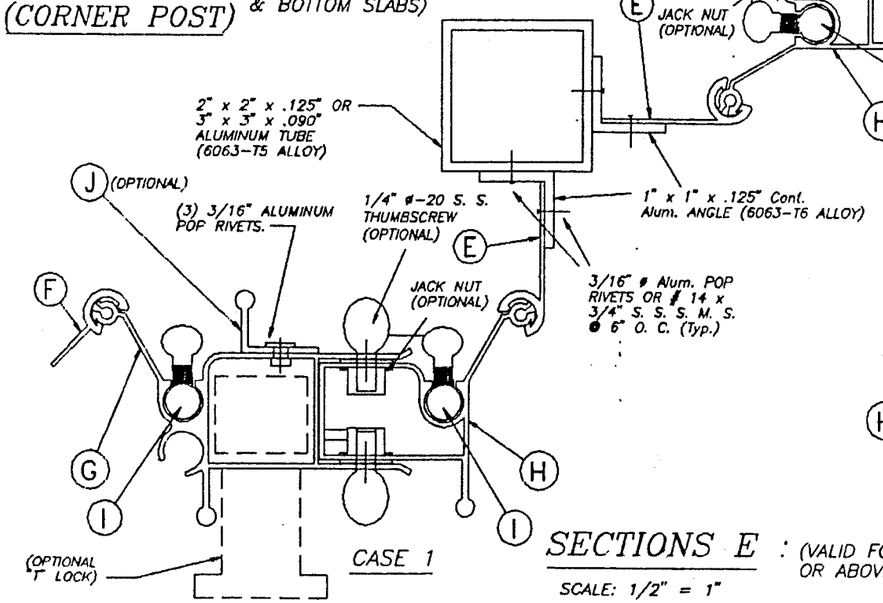

CASE 1

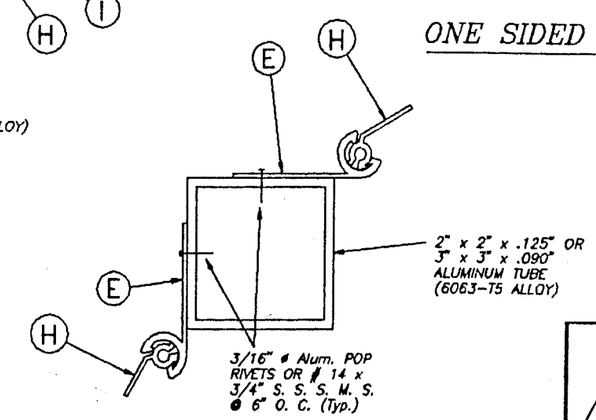

CASE 2

SECTIONS E : (VALID FOR 1st. FLOOR OR ABOVE INSTALLATION).

SCALE: 1/2" = 1"

PRODUCT RENEWED

ACCEPTANCE No. 00-0919.01

EXPIRATION DATE 09/09/2003

By Helmy A. Maker

PRODUCT CONTROL DIVISION
BUILDING CODE COMPLIANCE OFFICE

APPROVED AS COMPLYING WITH THE SOUTH FLORIDA BUILDING CODE

DATE October 19, 19 98

BY Helmy A. Maker

PRODUCT CONTROL DIVISION
BUILDING CODE COMPLIANCE OFFICE

ACCEPTANCE NO. 98-0722.03

DADE COUNTY

TILTECO INC.
TILLIT TESTING & ENGINEERING COMPANY
15525 N.W. 38th. St., Ste. 217, VIRGINIA GARDENS, Fl. 33166
Phone : (305)871-1530 . Fax : (305)871-1531

WALTER A. TILLIT Jr. P. E.
FLORIDA Lic. # 44167

BIG BEN 2 / ACCORDION SHUTTER

FLORIDA SCREEN ENTERPRISES
15201 N.W. 34th. AVENUE
OPA-LOCKA, FLORIDA 33054

REV. No	DESCRIPTION	DATE	REV. No	DESCRIPTION	DATE
1	-	-	3		
2	-	-	4		

AS SHOWN SCALE

6/03/98 DATE

98 - 142 DRAWING No

SHEET 4 OF 8

MAXIMUM DESIGN PRESSURE RATING "W" (p.s.f.) AND CORRESPONDING MAXIMUM SHUTTER LENGTH "L" SCHEDULE. VALID FOR SECTIONS A & B'

NOTE: DESIGN PRESSURE RATING CORRESPONDS ONLY TO NEGATIVE PRESSURE (SUCTION) LOADS, IN ACCORDANCE WITH ASCE 7-88 CRITERIA FOR A GIVEN OPENING. IF NEGATIVE PRESSURE VALUES COMPLY WITH THE REQUIRED PRESSURE FOR THE OPENING, THE POSITIVE PRESSURE WILL AUTOMATICALLY QUALIFY AND NEED NOT TO BE CHECKED.

MAXIMUM DESIGN LOAD "W" (p.s.f.)	MAXIMUM PANEL SPAN "L" (ft.)		MINIMUM SEPARATION "S" TO GLASS (in.)	
	*	**	*	**
32.5	13'-5"	13'-5"	3 1/2"	2 1/2"
35.0	12'-11"	12'-11"	3 1/2"	2 1/2"
40.0	12'-1"	12'-1"	3 1/2"	2 1/2"
45.1	11'-5"	11'-5"	3 3/8"	2 1/2"
47.8	11'-1"	11'-1"	3 3/8"	2 1/2"
49.0	10'-11"	10'-11"	3 3/8"	2 1/2"
50.5	10'-9"	10'-9"	3 3/8"	2 1/2"
52.0	10'-7"	10'-7"	3 3/8"	2 1/2"
52.4	10'-7"	10'-7"	3 3/8"	2 1/2"
55.0	10'-4"	10'-4"	3 3/8"	2 1/2"
55.2	10'-4"	10'-4"	3 3/8"	2 1/2"
55.6	10'-3"	10'-3"	3 3/8"	2 1/2"
57.2	10'-1"	10'-1"	3 3/8"	2 1/2"
58.6	10'-0"	10'-0"	3 3/8"	2 1/2"
58.8	10'-0"	10'-0"	3 3/8"	2 1/2"
59.5	9'-11"	9'-11"	3 3/8"	2 1/2"
59.7	9'-11"	9'-11"	3 3/8"	2 1/2"
61.5	9'-9"	9'-9"	3 3/8"	2 1/2"
61.8	9'-9"	9'-9"	3 3/8"	2 1/2"
61.9	9'-9"	9'-9"	3 3/8"	2 1/2"
63.4	9'-7"	9'-7"	3 3/8"	2 1/2"
63.6	9'-7"	9'-7"	3 3/8"	2 1/2"

MAXIMUM DESIGN LOAD "W" (p.s.f.)	MAXIMUM PANEL SPAN "L" (ft.)		MINIMUM SEPARATION "S" TO GLASS (in.)	
	*	**	*	**
63.7	9'-7"	9'-7"	3 3/8"	2 1/2"
66.9	9'-4"	9'-4"	3 3/8"	2 1/2"
67.0	9'-4"	9'-4"	3 3/8"	2 1/2"
67.5	9'-4"	9'-4"	3 3/8"	2 1/2"
70.1	9'-2"	9'-2"	3 3/8"	2 1/2"
71.1	9'-1"	9'-1"	3 3/8"	2 1/2"
71.4	9'-1"	9'-1"	3 3/8"	2 1/2"
71.5	9'-1"	9'-1"	3 3/8"	2 1/2"
72.9	8'-11"	8'-11"	2 3/4"	2 1/2"
75.1	8'-10"	8'-10"	2 3/4"	2 1/2"
75.2	8'-10"	8'-10"	2 3/4"	2 1/2"
75.3	8'-10"	8'-10"	2 3/4"	2 1/2"
77.0	8'-9"	8'-9"	2 3/4"	2 1/2"
77.5	8'-8"	8'-8"	2 3/4"	2 1/2"
78.8	8'-7"	8'-7"	2 3/4"	2 1/2"
80.7	8'-6"	8'-6"	2 3/4"	2 1/2"
81.5	8'-6"	8'-6"	2 3/4"	2 1/2"
82.5	8'-5"	8'-5"	2 3/4"	2 1/2"
83.4	8'-4"	8'-4"	2 3/4"	2 1/2"
86.2	8'-3"	8'-3"	2 3/4"	2 1/2"
86.7	8'-3"	8'-3"	2 3/4"	2 1/2"
86.8	8'-3"	8'-3"	2 3/4"	2 1/2"

MAXIMUM DESIGN LOAD "W" (p.s.f.)	MAXIMUM PANEL SPAN "L" (ft.)		MINIMUM SEPARATION "S" TO GLASS (in.)	
	*	**	*	**
88.5	8'-2"	8'-2"	2 3/4"	2 1/2"
90.3	8'-1"	8'-1"	2 3/4"	2 1/2"
90.8	8'-0"	8'-0"	2 3/4"	2 1/2"
91.4	8'-0"	8'-0"	2 3/4"	2 1/2"
92.7	7'-11"	7'-11"	2 5/8"	2 1/2"
93.8	7'-10"	7'-10"	2 5/8"	2 1/2"
94.8	7'-9"	7'-9"	2 5/8"	2 1/2"
96.6	7'-7"	7'-7"	2 5/8"	2 1/2"
96.8	7'-7"	7'-7"	2 5/8"	2 1/2"
97.7	7'-6"	7'-6"	2 5/8"	2 1/2"
100.5	7'-3"	7'-3"	2 5/8"	2 1/2"
101.5	7'-2"	7'-2"	2 5/8"	2 1/2"
103.7	7'-1"	7'-1"	2 5/8"	2 1/2"
106.5	6'-10"	6'-10"	2 5/8"	2 1/2"
108.8	6'-9"	6'-9"	2 5/8"	2 1/2"
110.6	6'-7"	6'-7"	2 5/8"	2 1/2"
111.0	6'-7"	6'-7"	2 5/8"	2 1/2"
114.1	6'-5"	6'-5"	2 5/8"	2 1/2"
116.5	6'-3"	6'-3"	2 5/8"	2 1/2"
116.9	6'-3"	6'-3"	2 5/8"	2 1/2"
117.6	6'-3"	6'-3"	2 5/8"	2 1/2"
119.7	6'-1"	6'-1"	2 5/8"	2 1/2"

MAXIMUM DESIGN LOAD "W" (p.s.f.)	MAXIMUM PANEL SPAN "L" (ft.)		MINIMUM SEPARATION "S" TO GLASS (in.)	
	*	**	*	**
120.0	6'-1"	6'-1"	2 5/8"	2 1/2"
121.2	6'-0"	6'-0"	2 5/8"	2 1/2"
122.5	6'-0"	6'-0"	2 5/8"	2 1/2"
125.3	5'-10"	5'-10"	2 5/8"	2 1/2"
125.8	5'-10"	5'-10"	2 5/8"	2 1/2"
126.7	5'-9"	5'-9"	2 5/8"	2 1/2"
129.6	5'-8"	5'-8"	2 5/8"	2 1/2"
130.9	5'-7"	5'-7"	2 5/8"	2 1/2"
131.6	5'-7"	5'-7"	2 5/8"	2 1/2"
134.3	5'-7"	5'-7"	2 5/8"	2 1/2"
136.2	5'-4"	5'-4"	2 5/8"	2 1/2"
137.9	5'-4"	5'-4"	2 5/8"	2 1/2"
140.7	5'-2"	5'-2"	2 5/8"	2 1/2"
142.8	5'-1"	5'-1"	2 5/8"	2 1/2"
143.5	5'-1"	5'-1"	2 5/8"	2 1/2"
147.0	5'-0"	5'-0"	2 5/8"	2 1/2"
148.4	4'-11"	4'-11"	2 5/8"	2 1/2"
152.6	4'-9"	4'-9"	2 5/8"	2 1/2"
153.1	4'-9"	4'-9"	2 5/8"	2 1/2"
156.8	4'-8"	4'-8"	2 5/8"	2 1/2"
157.5	4'-8"	4'-8"	2 5/8"	2 1/2"
157.8	4'-8"	4'-8"	2 5/8"	2 1/2"

MAXIMUM DESIGN LOAD "W" (p.s.f.)	MAXIMUM PANEL SPAN "L" (ft.)		MINIMUM SEPARATION "S" TO GLASS (in.)	
	*	**	*	**
158.8	4'-7"	4'-7"	2 5/8"	2 1/2"
160.8	4'-7"	4'-7"	2 5/8"	2 1/2"
161.7	4'-6"	4'-6"	2 5/8"	2 1/2"
164.4	4'-5"	4'-5"	2 5/8"	2 1/2"
165.2	4'-5"	4'-5"	2 5/8"	2 1/2"
168.1	4'-4"	4'-4"	2 5/8"	2 1/2"
168.7	4'-4"	4'-4"	2 5/8"	2 1/2"
170.0	4'-4"	4'-4"	2 5/8"	2 1/2"
175.6	4'-2"	4'-2"	2 5/8"	2 1/2"
176.6	4'-2"	4'-2"	2 5/8"	2 1/2"
180.3	4'-1"	4'-1"	2 5/8"	2 1/2"
188.0	3'-11"	3'-11"	2 5/8"	2 1/2"
195.2	3'-9"	3'-9"	2 5/8"	2 1/2"
197.2	3'-8"	3'-8"	2 5/8"	2 1/2"
199.1	3'-8"	3'-8"	2 5/8"	2 1/2"
204.7	3'-7"	3'-7"	2 5/8"	2 1/2"
211.3	3'-6"	3'-6"	2 5/8"	2 1/2"
216.9	3'-4"	3'-4"	2 5/8"	2 1/2"
221.6	3'-4"	3'-4"	2 5/8"	2 1/2"
226.3	3'-3"	3'-3"	2 5/8"	2 1/2"

* FOR SHUTTERS INSTALLED WITHIN THE FIRST 30'-0" ELEVATION OF BUILDING. SEE TABLE 1 FOR MINIMUM SEPARATION TO GLASS FOR SPANS SHORTER THAN THE MAXIMUM ALLOWED SHOWN ON SCHEDULE.

** FOR SHUTTERS INSTALLED ABOVE 30'-0" ELEVATION OF BUILDING, MEASURED AT BOTTOM OF SHUTTER.

MAXIMUM DESIGN PRESSURE RATING "W" (p.s.f.) AND CORRESPONDING MAXIMUM ANCHOR SPACING (in.) SCHEDULE. +

VALID FOR SECTIONS A & B'

MAXIMUM DESIGN LOAD "W" (p.s.f.)	WALL MOUNTING INSTALLATION AT TOP & BOTTOM (TO CONCRETE)			WALL MOUNTING INSTALLATION AT TOP & BOTTOM (TO MASONRY)			CEILING MOUNTING INSTALLATION TOP & BOTTOM (TO CONCRETE)		
	NOTE 1	NOTE 2	NOTE 3	NOTE 1	NOTE 2	NOTE 3	NOTE 1	NOTE 2	NOTE 3
FROM 32.5 TO 61.8	9"	9"	9"	9"	8"	7"	12"	7"	6"
FROM 61.9 TO 75.3	9"	9"	9"	9"	6"	6"	10"	6"	5 1/2"
FROM 75.4 TO 91.4	9"	8 1/2"	9"	9"	4 1/2"	6"	8"	5"	5"
FROM 91.5 TO 226.3	8 1/2"	8 1/2"	N/A	4 1/2"	4 1/2"	N/A	5"	5"	N/A

ANCHOR SPACING LEGEND

(1) Max. ANCHOR SPACING VALID FOR SPANS OF 5'-0" OR LESS.
(2) Max. ANCHOR SPACING VALID FOR SPANS GREATER THAN 5'-0" TO 8'-6".
(3) Max. ANCHOR SPACING VALID FOR SPANS GREATER THAN 8'-6" TO Max. ALLOWED.

\+ SEE SHEETS 7 & 8 OF 8 FOR ANCHORS TYPE & SPACING FOR INSTALLATIONS INTO WOOD FRAME BUILDINGS. MAXIMUM ANCHOR SPACINGS ARE VALID FOR 3" EDGE DISTANCE. FOR E. D. LESS THAN 3", REDUCE ANCHOR SPACING BY MULTIPLYING SPACINGS SHOWN ON SCHEDULE BY THE FOLLOWING FACTORS. (NOTE : Min. E. D. FOR RAWL CALK-IN ANCHORS IS 2 1/2").

ACTUAL E. D.= EDGE DISTANCE	FACTOR
2 1/2"	0.75
2"	0.50

PRODUCT RENEWED
ACCEPTANCE No. 00-0919.01
EXPIRATION DATE 09/09/2003
By [signature]
PRODUCT CONTROL DIVISION
BUILDING CODE COMPLIANCE OFFICE

[signature]
7/3/98

TABLE 1:

MINIMUM SEPARATION "S" BETWEEN GLASS AND SHUTTER FOR A GIVEN SHUTTER SPAN "L", FOR SHUTTERS INSTALLED WITHIN THE FIRST 30'-0" ABOVE GRADE OF A GIVEN BUILDING. 30'-0" ELEVATION SHALL BE MEASURED AT BOTTOM OF SHUTTER. SEPARATION "S" TO BE MEASURED AS INDICATED ON SECTION D, SHEET 4 OF 8.

SHUTTER SPAN "L" (ft.)	MINIMUM SEPARATION "S" (in.)
LESS OR EQUAL THAN 8'-0"	2 5/8"
> 8'-0" TO 9'-0"	2 3/4"
> 9'-0" TO 12'-0"	3 3/8"
> 12'-0" TO 13'-5"	3 1/2"

APPROVED AS COMPLYING WITH THE SOUTH FLORIDA BUILDING CODE
DATE October 19 19 98
BY [signature]
PRODUCT CONTROL DIVISION
BUILDING CODE COMPLIANCE OFFICE
ACCEPTANCE NO. 98-0722.03

DADE COUNTY

TILTECO INC.
TILLIT TESTING & ENGINEERING COMPANY
8595 N.W. 36th. St., Ste. 217, VIRGINIA GARDENS, FL 33166
Phone : (305)871-1530 . Fax : (305)871-1531
WALTER A. TILLIT Jr. P. E.
FLORIDA Lic. # 44167

BIG BEN 2 / ACCORDION SHUTTER

FLORIDA SCREEN ENTERPRISES
15201 N.W. 34th. AVENUE
OPA-LOCKA, FLORIDA 33054

REV. No	DESCRIPTION	DATE	REV. No	DESCRIPTION	DATE
1	-	-	3		
2	-	-	4		

SCALE
6/03/98
DATE
98 - 142
DRAWING No
SHEET 5 OF 8

MAXIMUM DESIGN PRESSURE RATING "W" (p.s.f.) AND CORRESPONDING MAXIMUM SHUTTER LENGTH "L" SCHEDULE. VALID FOR SECTIONS A1, B, B1, B2 & C

NOTE: DESIGN PRESSURE RATING CORRESPONDS ONLY TO NEGATIVE PRESSURE (SUCTION) LOADS, IN ACCORDANCE WITH ASCE 7-88 CRITERIA FOR A GIVEN OPENING. IF NEGATIVE PRESSURE VALUES COMPLY WITH THE REQUIRED PRESSURE FOR THE OPENING, THE POSITIVE PRESSURE WILL AUTOMATICALLY QUALIFY AND NEED NOT TO BE CHECKED.

MAXIMUM DESIGN LOAD "W" (p.s.f.)	MAXIMUM PANEL SPAN "L" (ft.)		MINIMUM SEPARATION "S" TO GLASS (in.)	
	*	**	*	**
32.5	13'-5"	13'-5"	3 1/2"	2 1/2"
35.0	13'-5"	13'-5"	3 1/2"	2 1/2"
40.0	13'-5"	13'-5"	3 1/2"	2 1/2"
45.1	13'-2"	13'-2"	3 1/2"	2 1/2"
47.8	13'-0"	13'-0"	3 1/2"	2 1/2"
49.0	12'-11"	12'-11"	3 1/2"	2 1/2"
50.5	12'-10"	12'-10"	3 1/2"	2 1/2"
52.0	12'-9"	12'-9"	3 1/2"	2 1/2"
52.4	12'-8"	12'-8"	3 1/2"	2 1/2"
55.0	12'-6"	12'-6"	3 1/2"	2 1/2"
55.2	12'-6"	12'-6"	3 1/2"	2 1/2"
55.6	12'-6"	12'-6"	3 1/2"	2 1/2"
57.2	12'-5"	12'-5"	3 1/2"	2 1/2"
58.6	12'-4"	12'-4"	3 1/2"	2 1/2"
58.8	12'-4"	12'-4"	3 1/2"	2 1/2"
59.5	12'-4"	12'-4"	3 1/2"	2 1/2"
59.7	12'-3"	12'-3"	3 1/2"	2 1/2"
61.5	12'-2"	12'-2"	3 1/2"	2 1/2"
61.8	12'-2"	12'-2"	3 1/2"	2 1/2"
61.9	12'-1"	12'-1"	3 1/2"	2 1/2"
63.4	12'-1"	12'-1"	3 1/2"	2 1/2"
63.6	12'-1"	12'-1"	3 1/2"	2 1/2"

MAXIMUM DESIGN LOAD "W" (p.s.f.)	MAXIMUM PANEL SPAN "L" (ft.)		MINIMUM SEPARATION "S" TO GLASS (in.)	
	*	**	*	**
63.7	12'-1"	12'-1"	3 1/2"	2 1/2"
66.9	11'-11"	11'-11"	3 3/8"	2 1/2"
67.0	11'-11"	11'-11"	3 3/8"	2 1/2"
67.5	11'-11"	11'-11"	3 3/8"	2 1/2"
70.1	11'-8"	11'-8"	3 3/8"	2 1/2"
71.1	11'-7"	11'-7"	3 3/8"	2 1/2"
71.4	11'-7"	11'-7"	3 3/8"	2 1/2"
71.5	11'-7"	11'-7"	3 3/8"	2 1/2"
72.9	11'-6"	11'-6"	3 3/8"	2 1/2"
75.1	11'-4"	11'-4"	3 3/8"	2 1/2"
75.2	11'-3"	11'-3"	3 3/8"	2 1/2"
75.3	11'-3"	11'-3"	3 3/8"	2 1/2"
77.0	11'-2"	11'-2"	3 3/8"	2 1/2"
77.5	11'-1"	11'-1"	3 3/8"	2 1/2"
78.8	11'-0"	11'-0"	3 3/8"	2 1/2"
80.7	10'-11"	10'-11"	3 3/8"	2 1/2"
81.5	10'-10"	10'-10"	3 3/8"	2 1/2"
82.5	10'-9"	10'-9"	3 3/8"	2 1/2"
83.4	10'-9"	10'-9"	3 3/8"	2 1/2"
85.2	10'-7"	10'-7"	3 3/8"	2 1/2"
85.7	10'-6"	10'-6"	3 3/8"	2 1/2"
85.8	10'-6"	10'-5"	3 3/8"	2 1/2"

MAXIMUM DESIGN LOAD "W" (p.s.f.)	MAXIMUM PANEL SPAN "L" (ft.)		MINIMUM SEPARATION "S" TO GLASS (in.)	
	*	**	*	**
88.5	10'-5"	10'-5"	3 1/2"	2 1/2"
90.3	10'-4"	10'-4"	3 3/8"	2 1/2"
90.8	10'-3"	10'-3"	3 3/8"	2 1/2"
91.4	10'-3"	10'-3"	3 3/8"	2 1/2"
92.7	10'-2"	10'-2"	3 3/8"	2 1/2"
93.8	10'-1"	10'-1"	3 3/8"	2 1/2"
94.8	10'-1"	10'-1"	3 3/8"	2 1/2"
96.6	9'-11"	9'-11"	3 3/8"	2 1/2"
96.8	9'-11"	9'-11"	3 3/8"	2 1/2"
97.7	9'-10"	9'-10"	3 3/8"	2 1/2"
100.5	9'-7"	9'-7"	3 3/8"	2 1/2"
101.5	9'-6"	9'-6"	3 3/8"	2 1/2"
103.7	9'-3"	9'-3"	3 3/8"	2 1/2"
106.5	9'-0"	9'-0"	3 1/8"	2 1/2"
108.8	8'-10"	8'-10"	3 1/8"	2 1/2"
110.6	8'-8"	8'-8"	3 1/8"	2 1/2"
111.0	8'-8"	8'-8"	3 1/8"	2 1/2"
114.1	8'-5"	8'-5"	3 1/8"	2 1/2"
116.5	8'-3"	8'-3"	3 1/8"	2 1/2"
116.9	8'-3"	8'-3"	3 1/8"	2 1/2"
117.6	8'-2"	8'-2"	3 1/8"	2 1/2"
119.7	8'-0"	8'-0"	3 1/8"	2 1/2"

MAXIMUM DESIGN LOAD "W" (p.s.f.)	MAXIMUM PANEL SPAN "L" (ft.)		MINIMUM SEPARATION "S" TO GLASS (in.)	
	*	**	*	**
120.0	8'-0"	8'-0"	3 1/8"	2 1/2"
121.2	7'-11"	7'-11"	3 1/8"	2 1/2"
122.5	7'-10"	7'-10"	3 1/8"	2 1/2"
125.3	7'-8"	7'-8"	3 1/8"	2 1/2"
125.8	7'-8"	7'-8"	3 1/8"	2 1/2"
126.7	7'-7"	7'-7"	3 1/8"	2 1/2"
129.6	7'-5"	7'-5"	3 1/8"	2 1/2"
130.9	7'-4"	7'-4"	3 1/8"	2 1/2"
131.6	7'-4"	7'-4"	3 1/8"	2 1/2"
134.3	7'-2"	7'-2"	3 1/8"	2 1/2"
136.2	7'-1"	7'-1"	3 1/8"	2 1/2"
137.9	7'-0"	7'-0"	3 1/8"	2 1/2"
140.7	6'-10"	6'-10"	3 1/8"	2 1/2"
142.6	6'-9"	6'-9"	3 1/8"	2 1/2"
143.5	6'-8"	6'-8"	3 1/8"	2 1/2"
147.0	6'-6"	6'-6"	3 1/8"	2 1/2"
148.4	6'-6"	6'-6"	3 1/8"	2 1/2"
152.6	6'-4"	6'-4"	3 1/8"	2 1/2"
153.1	6'-3"	6'-3"	3 1/8"	2 1/2"
156.8	6'-2"	6'-2"	3 1/8"	2 1/2"
157.5	6'-1"	6'-1"	3 1/8"	2 1/2"
157.8	6'-1"	6'-1"	3 1/8"	2 1/2"

MAXIMUM DESIGN LOAD "W" (p.s.f.)	MAXIMUM PANEL SPAN "L" (ft.)		MINIMUM SEPARATION "S" TO GLASS (in.)	
	*	**	*	**
158.8	6'-1"	6'-1"	3 1/8"	2 1/2"
160.8	6'-0"	6'-0"	3 1/8"	2 1/2"
161.7	5'-11"	5'-11"	3 1/8"	2 1/2"
164.4	5'-10"	5'-10"	3 1/8"	2 1/2"
165.2	5'-10"	5'-10"	3 1/8"	2 1/2"
168.1	5'-9"	5'-9"	3 1/8"	2 1/2"
168.7	5'-8"	5'-8"	3 1/8"	2 1/2"
170.0	5'-8"	5'-8"	3 1/8"	2 1/2"
175.8	5'-6"	5'-6"	3 1/8"	2 1/2"
176.8	5'-5"	5'-5"	3 1/8"	2 1/2"
180.3	5'-4"	5'-4"	3 1/8"	2 1/2"
188.0	5'-1"	5'-1"	3 1/8"	2 1/2"
195.2	4'-11"	4'-11"	3 1/8"	2 1/2"
197.2	4'-10"	4'-10"	3 1/8"	2 1/2"
199.1	4'-10"	4'-10"	3 1/8"	2 1/2"
204.7	4'-8"	4'-8"	3 1/8"	2 1/2"
211.3	4'-7"	4'-7"	3 1/8"	2 1/2"
216.9	4'-5"	4'-5"	3 1/8"	2 1/2"
221.6	4'-4"	4'-4"	3 1/8"	2 1/2"
226.3	4'-3"	4'-3"	3 1/8"	2 1/2"

* FOR SHUTTERS INSTALLED WITHIN THE FIRST 30'-0" ELEVATION OF BUILDING. SEE TABLE 1 FOR MINIMUM SEPARATION TO GLASS FOR SPANS SHORTER THAN THE MAXIMUM ALLOWED SHOWN ON SCHEDULE.

** FOR SHUTTERS INSTALLED ABOVE 30'-0" ELEVATION OF BUILDING, MEASURED AT BOTTOM OF SHUTTER.

MAXIMUM DESIGN PRESSURE RATING "W" (p.s.f.) AND CORRESPONDING MAXIMUM ANCHOR SPACING (in.) SCHEDULE. +

VALID FOR SECTIONS A1, B, B1, B2 & C

MAXIMUM DESIGN LOAD "W" (p.s.f.)	WALL MOUNTING INSTALLATION AT TOP & BOTTOM (TO CONCRETE)			WALL MOUNTING INSTALLATION AT TOP & BOTTOM (TO MASONRY)			CEILING MOUNTING INSTALLATION TOP & BOTTOM (TO CONCRETE)		
	NOTE 1	NOTE 2	NOTE 3	NOTE 1	NOTE 2	NOTE 3	NOTE 1	NOTE 2	NOTE 3
FROM 32.5 TO 61.8	8"	8"	8"	8"	8"	6"	8"	7"	6"
FROM 61.9 TO 75.3	8"	8"	8"	8"	7 1/2"	3"	8"	6"	5 1/2"
FROM 75.4 TO 91.4	8"	8"	4 1/2"	8"	4"	–	8"	5"	5"
FROM 91.5 TO 226.3	4"	4"	4"	3 1/2"*	–	–	5"	5"	5"

* VALID FOR UP TO 3'-6" MAXIMUM SPAN.

ANCHOR SPACING LEGEND

(1) Max. ANCHOR SPACING VALID FOR SPANS OF 5'-0" OR LESS.
(2) Max. ANCHOR SPACING VALID FOR SPANS GREATER THAN 5'-0" TO 8'-6".
(3) Max. ANCHOR SPACING VALID FOR SPANS GREATER THAN 8'-6" TO Max. ALLOWED.

\+ USE ONLY TAPCON ANCHORS AT ALL WALL MOUNT INSTALLATIONS. USE TAPCON/RAWL CALK-IN ANCHORS AT CEILING/FLOOR MOUNT INSTALLATIONS.
SEE SHEETS 7 & 8 OF 8 FOR ANCHORS TYPE & SPACING FOR INSTALLATIONS INTO WOOD FRAME BLDGS.
MAXIMUM ANCHOR SPACINGS ARE VALID FOR 3" EDGE DISTANCE. FOR E. D. LESS THAN 3", REDUCE ANCHOR SPACING BY MULTIPLYING SPACINGS SHOWN ON SCHEDULE BY THE FOLLOWING FACTORS. (NOTE : Min. E. D. FOR RAWL CALK-IN ANCHORS IS 2 1/2").

ACTUAL E. D.= EDGE DISTANCE	FACTOR
2 1/2"	0.75
2"	0.50

TABLE 1:

MINIMUM SEPARATION "S" BETWEEN GLASS AND SHUTTER FOR A GIVEN SHUTTER SPAN "L", FOR SHUTTERS INSTALLED WITHIN THE FIRST 30'-0" ABOVE GRADE OF A GIVEN BUILDING. 30'-0" ELEVATION SHALL BE MEASURED AT BOTTOM OF SHUTTER. SEPARATION "S" TO BE MEASURED AS INDICATED ON SECTION D, SHEET 4 OF 8.

SHUTTER SPAN "L" (ft.)	MINIMUM SEPARATION "S" (in.)
LESS OR EQUAL THAN 9'-0"	3 1/8"
> 9'-0" TO 12'-0"	3 3/8"
> 12'-0" TO 13'-5"	3 1/2"

APPROVED AS COMPLYING WITH THE SOUTH FLORIDA BUILDING CODE
DATE October 19, 19 98
BY Helmy A. Meker
PRODUCT CONTROL DIVISION
BUILDING CODE COMPLIANCE OFFICE
ACCEPTANCE NO. 98-0722.03

PRODUCT RENEWED
ACCEPTANCE No. 00-0919.01
EXPIRATION DATE 09/09/2003
By Helmy A. Meker
PRODUCT CONTROL DIVISION
BUILDING CODE COMPLIANCE OFFICE
7/3/05

DADE COUNTY

TILTECO INC.
TILLIT TESTING & ENGINEERING COMPANY
6595 N.W. 36th. St., Ste. 217, VIRGINIA GARDENS, FL 33166
Phone : (305)871-1530 . Fax : (305)871-1531
WALTER A. TILLIT Jr. P. E.
FLORIDA Lic. # 44167

BIG BEN 2 / ACCORDION SHUTTER

FLORIDA SCREEN ENTERPRISES
15201 N.W. 34th. AVENUE
OPA-LOCKA, FLORIDA 33054

REV. No	DESCRIPTION	DATE	REV. No	DESCRIPTION	DATE
1	–	–	3		
2	–	–	4		

SCALE
6/03/98
DATE
98 - 142
DRAWING No
SHEET 6 OF 8

INSTALLATION DETAILS ON EXISTING WOOD BUILDINGS

NOTES:

1. INSTALLATIONS ARE ONLY VALID FOR BUILDINGS WITH DESIGN LOAD UP TO 75.0 p.s.f. AND 9'-0" Max. SHUTTER SPAN.
2. NEW 2" x 6" P. T. TO BE SOUTHERN PINE No. 2, SURFACED DRY WITH 19 % M. M. C. W/ SPECIFIC DENSITY OF 0.55.
3. FOR NEW WOOD FRAME CONSTRUCTION: WOOD MEMBERS TO BE SOUTHERN PINE No. 2, W/ SPECIFIC DENSITY OF 0.55 OR EQUAL.

NOTE FOR COMBINATION OF SECTIONS :

WALL/CEILING/FLOOR MOUNTING SECTIONS CAN BE COMBINED IN ANY WAY TO SUIT ANY INSTALLATION.

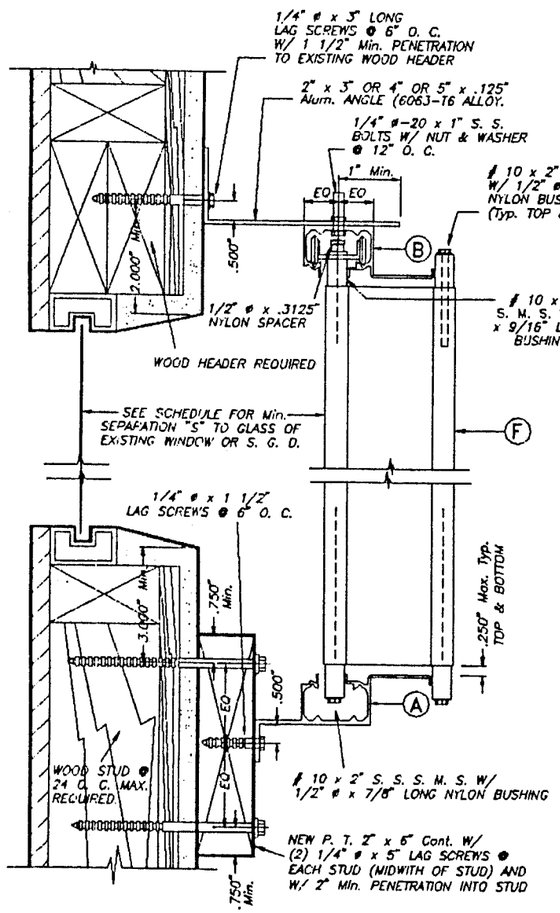

ALTERNATIVE 1

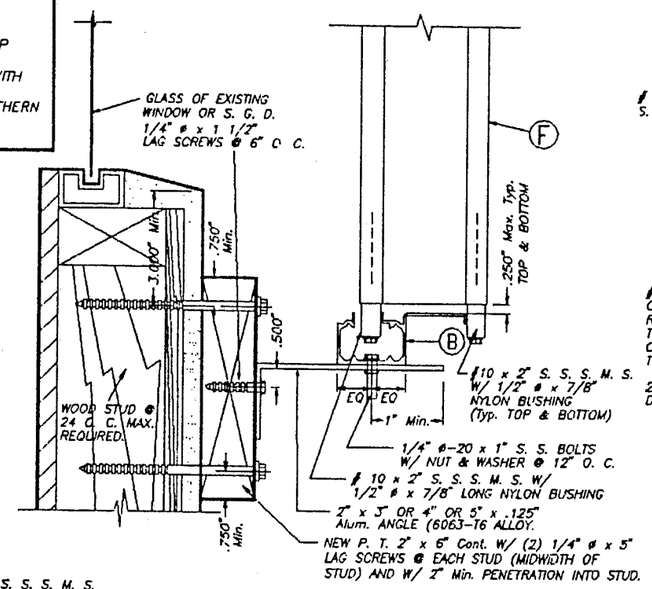

ALTERNATIVE 2

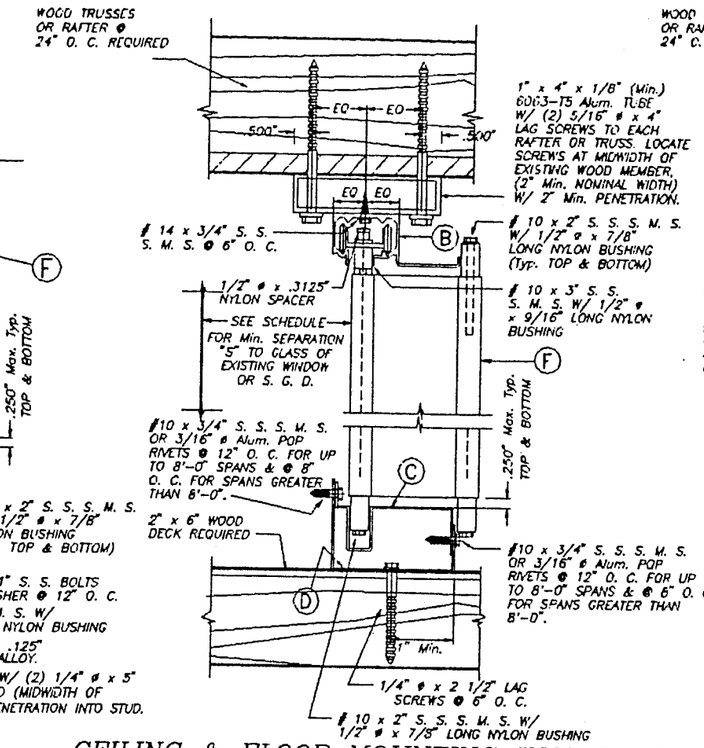

CEILING & FLOOR MOUNTING INSTALLAT. – SECTION B1

SCALE : 1/4" = 1"

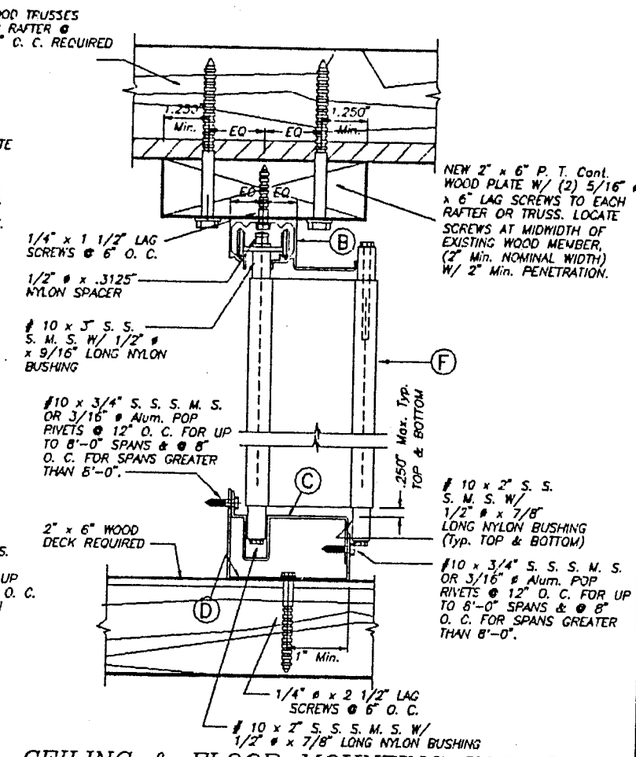

CEILING & FLOOR MOUNTING INSTALLAT. – SECTION B1'

SCALE : 1/4" = 1"

PRODUCT RENEWED

ACCEPTANCE No. 00-0919.01

EXPIRATION DATE 09/09/2003

By Helmy A. Maker

PRODUCT CONTROL DIVISION
BUILDING CODE COMPLIANCE OFFICE

APPROVED AS COMPLYING WITH THE SOUTH FLORIDA BUILDING CODE

DATE October 19 19 98

By Helmy A. Maker

PRODUCT CONTROL DIVISION
BUILDING CODE COMPLIANCE OFFICE

ACCEPTANCE NO. 98-0722.03

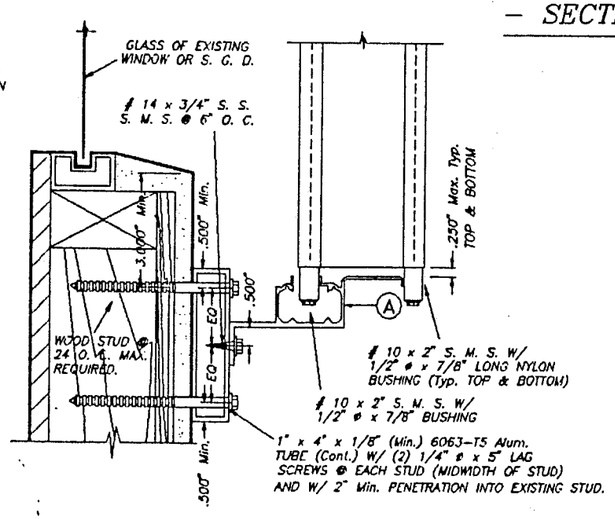

ALTERNATIVE 3

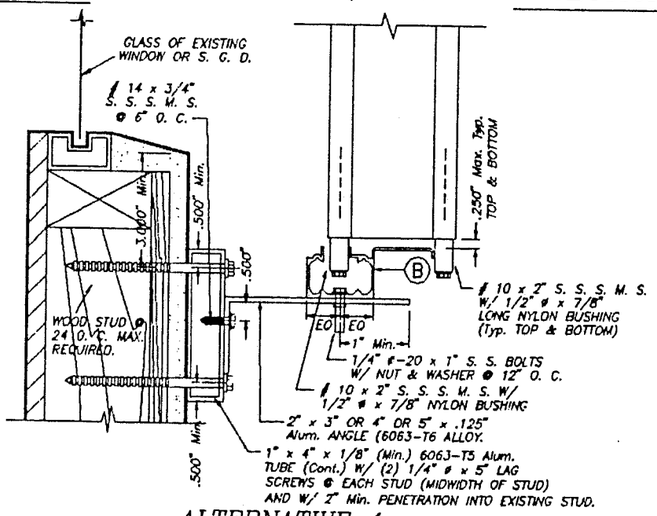

ALTERNATIVE 4

WALL MOUNTING INSTALLATION (OFFSET) – SECTION A1

SCALE : 1/4" = 1"

7/2/98

DADE COUNTY

TILTECO INC. TILLIT TESTING & ENGINEERING COMPANY, 6595 N.W. 36th. St., Ste. 217, VIRGINIA GARDENS, FL 33166, Phone : (305)871-1530 . Fax : (305)871-1531	BIG BEN 2 / ACCORDION SHUTTER		AS SHOWN SCALE
WALTER A. TILLIT Jr. P. E. FLORIDA Lic. # 44167	FLORIDA SCREEN ENTERPRISES, 15201 N.W. 34th. AVENUE, OPA-LOCKA, FLORIDA 33054		6/03/98 DATE
			98 – 142 DRAWING No
			SHEET 7 OF 8

REV. No	DESCRIPTION	DATE	REV. No	DESCRIPTION	DATE
1	–	–	3		
2	–	–	4		

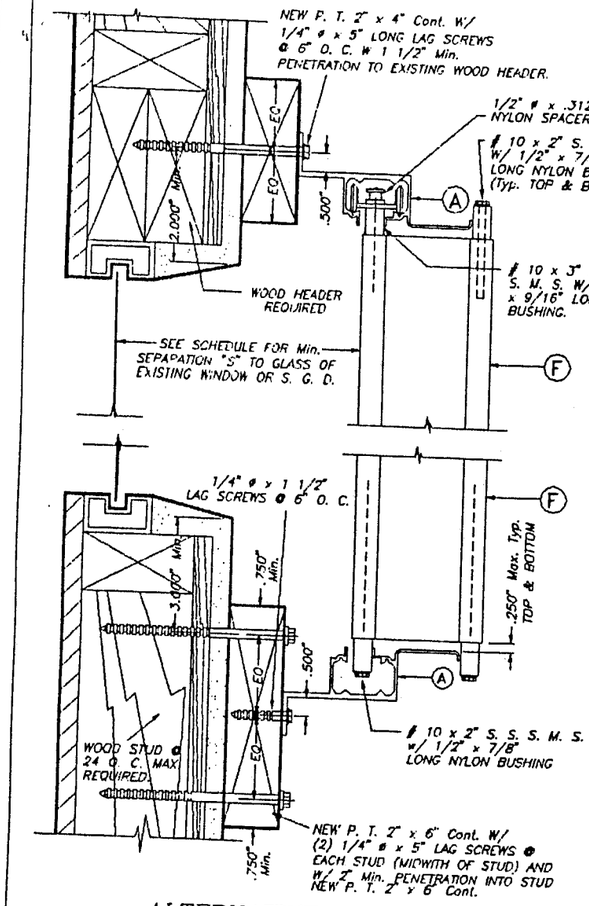

ALTERNATIVE 1

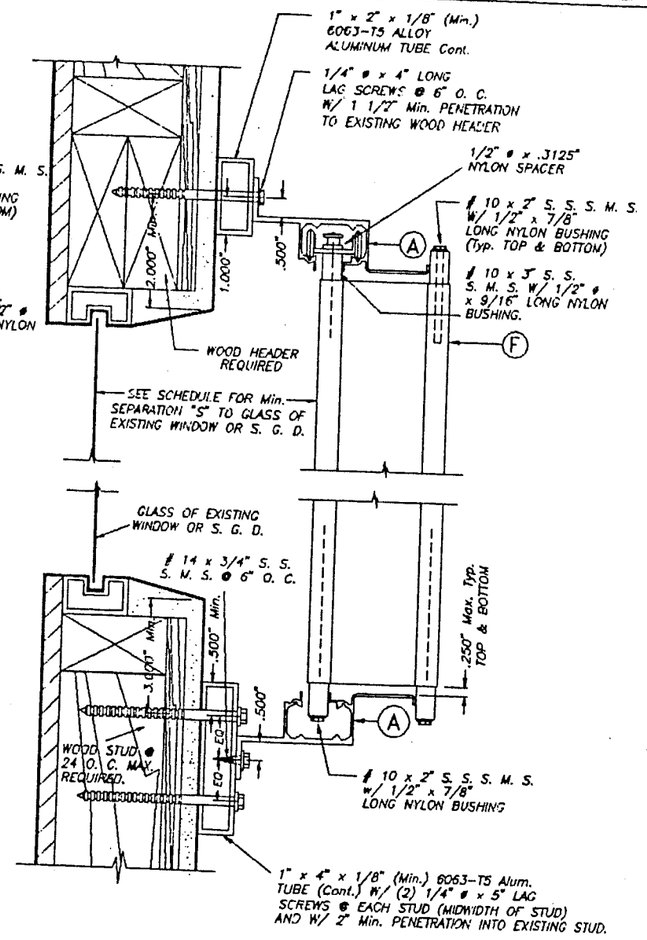

ALTERNATIVE 2

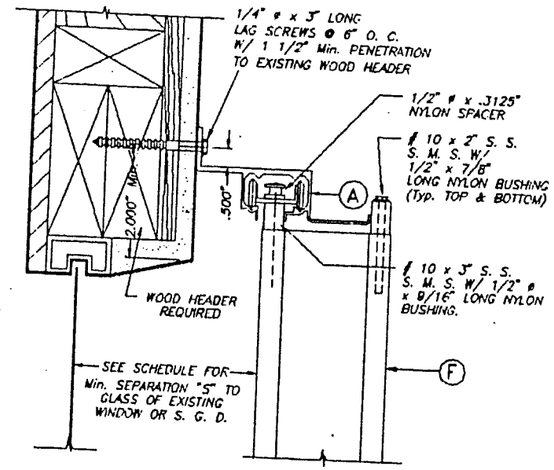

WALL MOUNTING INSTALLATION

– SECTION A1' SCALE: 1/4" = 1"

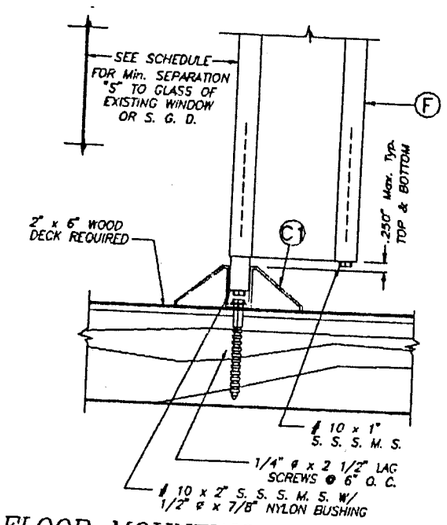

FLOOR MOUNTING INSTALLATION

– SECTION B2 SCALE: 1/4" = 1"

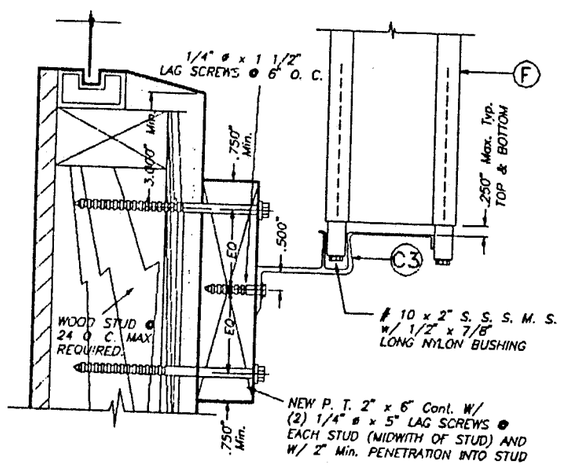

ALTERNATIVE 3

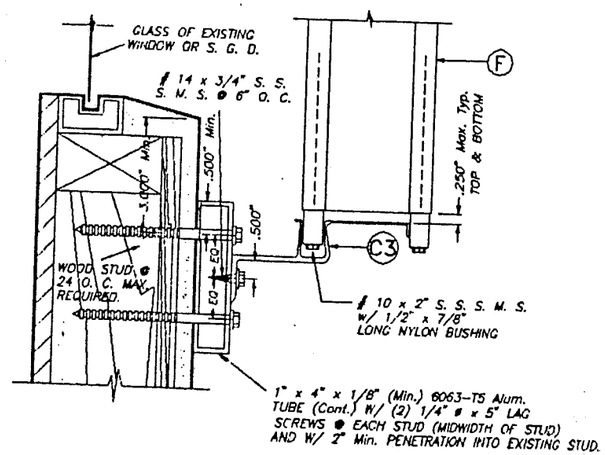

ALTERNATIVE 4

WALL MOUNTING INSTALLATION (OFFSET) – SECTION C1

SCALE: 1/4" = 1"

NOTES:

1. INSTALLATIONS ARE ONLY VALID FOR BUILDINGS WITH DESIGN LOAD UP TO 75.0 p.s.f. AND 9'-0" Max. SHUTTER SPAN.
2. NEW 2" x 6" P. T. TO BE SOUTHERN PINE No. 2, SURFACED DRY WITH 19 % M. M. C. W/ SPECIFIC DENSITY OF 0.55.
3. FOR NEW WOOD FRAME CONSTRUCTION: WOOD MEMBERS TO BE SOUTHERN PINE No. 2, W/ SPECIFIC DENSITY OF 0.55 OR EQUAL.

NOTE FOR COMBINATION OF SECTIONS :

WALL/FLOOR MOUNTING SECTIONS CAN BE COMBINED IN ANY WAY TO SUIT ANY INTALLATIONS.

INSTALLATION DETAILS ON EXISTING WOOD BUILDINGS

PRODUCT RENEWED

ACCEPTANCE No. 00-0919.01

EXPIRATION DATE 09/09/2003

By Helmy A. Mekkawy

PRODUCT CONTROL DIVISION
BUILDING CODE COMPLIANCE OFFICE

APPROVED AS COMPLYING WITH THE SOUTH FLORIDA BUILDING CODE

DATE October 19, 19 98

BY Helmy A. Mekkawy

PRODUCT CONTROL DIVISION
BUILDING CODE COMPLIANCE OFFICE

ACCEPTANCE NO. 98-0722.03

DADE COUNTY

7/8/98

TILTECO INC.
TILLIT TESTING & ENGINEERING COMPANY
8595 N.W. 38th. St., Ste. 217, VIRGINIA GARDENS, Fl. 33166
Phone : (305)871-1530 . Fax : (305)871-1531
WALTER A. TILLIT Jr. P. E.
FLORIDA Lic. # 44167

BIG BEN 2 / ACCORDION SHUTTER

FLORIDA SCREEN ENTERPRISES
15201 N.W. 34th. AVENUE
OPA-LOCKA, FLORIDA 33054

REV. No	DESCRIPTION	DATE	REV. No	DESCRIPTION	DATE
1	–	–	3		
2	–	–	4		

AS SHOWN SCALE

6/03/98 DATE

98 – 142 DRAWING No

SHEET 8 OF 8