MIAMI-DADE

MIAMI-DADE COUNTY, FLORIDA
METRO-DADE FLAGLER BUILDING

BUILDING CODE COMPLIANCE OFFICE
METRO-DADE FLAGLER BUILDING
140 WEST FLAGLER STREET, SUITE 1603
MIAMI, FLORIDA 33130-1563
(305) 375-2901 FAX (305) 375-2908

CONTRACTOR LICENSING SECTION
(305) 375-2527 FAX (305) 375-2558

CONTRACTOR ENFORCEMENT DIVISION
(305) 375-2966 FAX (305) 375-2908

PRODUCT CONTROL DIVISION
(305) 375-2902 FAX (305) 372-6339

PRODUCT CONTROL NOTICE OF ACCEPTANCE

Jeld-Wen, Inc
3250 Lakeport Drive
Klamath Falls ,OR 97601

Your application for Notice of Acceptance (NOA) of:
Series "Door Craft Steel" Inswing Opaque S/E Residential Insulated Steel Door - Impact
under Chapter 8 of the Code of Miami-Dade County governing the use of Alternate Materials and Types of Construction, and completely described herein, has been recommended for acceptance by the Miami-Dade County Building Code Compliance Office (BCCO) under the conditions specified herein.

This NOA shall not be valid after the expiration date stated below. BCCO reserves the right to secure this product or material at any time from a jobsite or manufacturer's plant for quality control testing. If this product or material fails to perform in the approved manner, BCCO may revoke, modify, or suspend the use of such product or material immediately. BCCO reserves the right to revoke this approval, if it is determined by BCCO that this product or material fails to meet the requirements of the South Florida Building Code.

The expense of such testing will be incurred by the manufacturer.

ACCEPTANCE NO.: 00-1006.04
EXPIRES: 02/11/2003

Raul Rodriguez
Chief Product Control Division

THIS IS THE COVERSHEET, SEE ADDITIONAL PAGES FOR SPECIFIC AND GENERAL CONDITIONS
BUILDING CODE & PRODUCT REVIEW COMMITTEE

This application for Product Approval has been reviewed by the BCCO and approved by the Building Code and Product Review Committee to be used in Miami-Dade County, Florida under the conditions set forth above.

Francisco J. Quintana, R.A.
Director
Miami-Dade County
Building Code Compliance Office

APPROVED: 02/08/2001

Jeld-Wen, Inc.

ACCEPTANCE No.: 00-1006.04

APPROVED : FEB 0 8 2001

EXPIRES : February 11, 2003

NOTICE OF ACCEPTANCE: SPECIFIC CONDITIONS

1. SCOPE

1.1 This **revises** the Notice of Acceptance No. 99-1007.02, which was issued on February 11, 2000. It approves a residential insulated steel door, as described in Section 2 of this Notice of Acceptance, designed to comply with the South Florida Building Code (SFBC), 1994 Edition for Miami-Dade County, for the locations where the pressure requirements, as determined by SFBC Chapter 23, do not exceed the Design Pressure Rating values indicated in the approved drawings.

2. PRODUCT DESCRIPTION

2.1 The **Series "DoorCraft® Steel" Inswing Opaque Steel Edge Residential Insulated Steel Door - Impact Resistant** and its components shall be constructed in strict compliance with the following documents: Drawing No **DC9970-1**, titled "Inswing Opaque Steel Insulated Steel Single Door in Wood Frame" Sheets 1 through 4 of 4, prepared by R.W. Building Consultants, Inc., dated 09/25/00 with revision 1 dated 1/10/01bearing the Miami-Dade County Product Control approval stamp with the Notice of Acceptance number and approval date by the Miami-Dade County Product Control Division. These documents shall hereinafter be referred to as the approved drawings.

3. LIMITATIONS

3.1 This approval applies to single unit applications of single door only, as shown in approved drawings.

3.2 Unit shall be installed only at locations protected by a canopy or overhang such that the angle between the edge of canopy or overhang to sill is less than 45 degrees. Unless unit is installed in non-habitable areas where the unit and the area are designed to accept water infiltration.

4. INSTALLATION

4.1 The residential insulated steel door and its components shall be installed in strict compliance with the approved drawings.

4.2 Hurricane protection system (shutters): the installation of this unit **will not require** a hurricane protection system.

5. LABELING

5.1 Each unit shall bear a permanent label with the manufacturer's name or logo, city, state and following statement: "Miami-Dade County Product Control Approved".

6. BUILDING PERMIT REQUIREMENTS

6.1 Application for building permit shall be accompanied by copies of the following:

6.1.1 This Notice of Acceptance

6.1.2 Duplicate copies of the approved drawings, as identified in Section 2 of this Notice of Acceptance, clearly marked to show the components selected for the proposed installation.

6.1.3 Any other documents required by the Building Official or the South Florida Building Code (SFBC) in order to properly evaluate the installation of this system.

Manuel Perez

Manuel Perez, P.E. Product Control Examiner
Product Control Division

Jeld-Wen, Inc.

ACCEPTANCE No.: 00-1006.04

APPROVED : FEB 0 8 2001

EXPIRES : February 11, 2003

NOTICE OF ACCEPTANCE: STANDARD CONDITIONS

1. Renewal of this Acceptance (approval) shall be considered after a renewal application has been filed and the original submitted documentation, including test supporting data, engineering documents, are no older than eight (8) years.

2. Any and all approved products shall be permanently labeled with the manufacturer's name, city, state, and the following statement: "Miami-Dade County Product Control Approved", or as specifically stated in the specific conditions of this Acceptance.

3. Renewals of Acceptance will not be considered if:
   a) There has been a change in the South Florida Building Code affecting the evaluation of this product and the product is not in compliance with the code changes;
   b) The product is no longer the same product (identical) as the one originally approved;
   c) If the Acceptance holder has not complied with all the requirements of this acceptance, including the correct installation of the product;
   d) The engineer who originally prepared, signed and sealed the required documentation initially submitted is no longer practicing the engineering profession.

4. Any revision or change in the materials, use, and/or manufacture of the product or process shall automatically be cause for termination of this Acceptance, unless prior written approval has been requested (through the filing of a revision application with appropriate fee) and granted by this office.

5. Any of the following shall also be grounds for removal of this Acceptance:
   a) Unsatisfactory performance of this product or process.
   b) Misuse of this Acceptance as an endorsement of any product, for sales, advertising or any other purpose.

6. The Notice of Acceptance number preceded by the words Miami-Dade County, Florida, and followed by the expiration date may be displayed in advertising literature. If any portion of the Notice of Acceptance is displayed, then it shall be done in its entirety.

7. A copy of this Acceptance as well as approved drawings and other documents, where it applies, shall be provided to the user by the manufacturer or its distributors and shall be available for inspection at the job site at all time. The engineer need not reseal the copies.

8. Failure to comply with any section of this Acceptance shall be cause for termination and removal of Acceptance.

9. This Notice of Acceptance consists of pages 1, 2 and this last page 3.

Manuel Perez, P.E. Product Control Examiner
Product Control Division

END OF THIS ACCEPTANCE

DoorCraft® Steel

INSWING OPAQUE SINGLE DOOR

STEEL EDGE INSULATED STEEL DOOR WITH WOOD FRAMES

GENERAL NOTES

1. THIS PRODUCT IS DESIGNED TO MEET THE SOUTH FLORIDA BUILDING CODE 1994 EDITION FOR MIAMI–DADE COUNTY.
2. WOOD BUCKS BY OTHERS, MUST BE ANCHORED PROPERLY TO TRANSFER LOADS TO THE STRUCTURE.
3. PRODUCT ANCHORS SHALL BE AS LISTED AND SPACED AS SHOWN ON DETAILS. ANCHOR EMBEDMENT TO BASE MATERIAL SHALL BE BEYOND WALL DRESSING OR STUCCO.
4. IMPACT RESISTANT SHUTTERS NOT REQUIRED
5. DESIGN PRESSURE RATING SHALL BE AS FOLLOWS:
   - FOR 6'8" WOOD FRAMES – SEE TABLE SHEET 1
   - FOR 8'0" WOOD FRAMES – SEE TABLE SHEET 1
6. THIS SYSTEM WAS TESTED FOR 2.86 LBS. WATER PRESSURE AS PER ASTM–E331.
8. THIS SYSTEM DOES NOT MEET THE WATER REQUIREMENTS IN MIAMI – DADE COUNTY WITHOUT QUALIFYING OVERHANG.

INSWING INSULATED STEEL DOOR
(Common to all frame conditions)

Door Leaf Construction:
Face sheets: 24 ga. (0.020") minimum thickness, Galvanized steel A–525 commercial quality – AKDQ per ASTM 620 with min. yield strength Fy=26,240 psi.
Core design: Expanded polstyrene with 1.0 to 1.25 lbs. density.
Construction: steel face sheets glued to expanded polystyrene (EPS), with steel rails and steel stiles a wood lock block reinforcement.

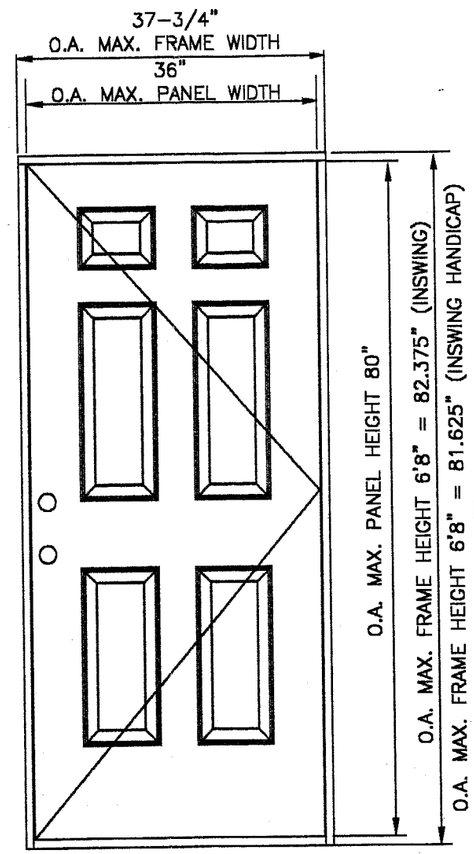

6'–8" Height

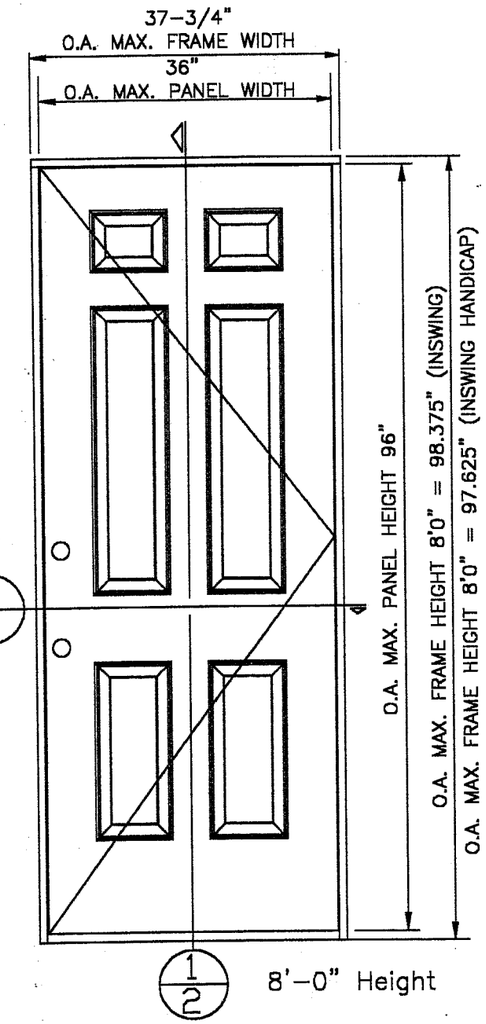

8'–0" Height

6 PANEL EMBOSSED DOORS VIEWED FROM EXTERIOR

(SHOWN FOR CLARITY OF VIEW)

TABLE OF CONTENTS

SHEET #	DESCRIPTION
1	COMMON (GENERAL NOTES, TYPICAL ELEVATION)
2	VERTICAL CROSS SECTIONS & BILL OF MATERIALS
3	HORIZONTAL CROSS SECTION
4	ANCHOR LOCATIONS

DESIGN PRESSURE RATING

	WHERE WATER INFILTRATION REQUIREMENT IS NEEDED (WITH QUALIFYING OVERHANG)		WHERE WATER INFILTRATION REQUIREMENT IS NOT NEEDED	
	POSITIVE	NEGATIVE	POSITIVE	NEGATIVE
6'8"	80.0 psf	80.0 psf	80.0 psf	80.0 psf
8'0"	61.0 psf	65.0 psf	61.0 psf	65.0 psf

APPROVED AS COMPLYING WITH THE SOUTH FLORIDA BUILDING CODE
DATE February 08, 2001
BY Manuel Perez
PRODUCT CONTROL DIVISION
BUILDING CODE COMPLIANCE OFFICE
ACCEPTANCE NO. 00-1006.04

JELD-WEN, INC.
31725 HIGHWAY 97 NORTH
CHILOQUIN, OR. 97624
PH. 541.783.2057

PRODUCT: INSWING OPAQUE INSULATED STEEL SINGLE DOOR IN WOOD FRAME

PART OR ASSEMBLY: ELEVATIONS AND GENERAL NOTES

REVISIONS

NO.	DATE		BY
1	1/10/01	6'8 ANCHORS	RW

RW BUILDING CONSULTANTS, INC.
813.684.3831

DATE: 9/25/00
SCALE: N.T.S.
DWG. BY: TJH
CHK. BY: RW
DRAWING NO.: DC9970–I
SHEET 1 OF 4

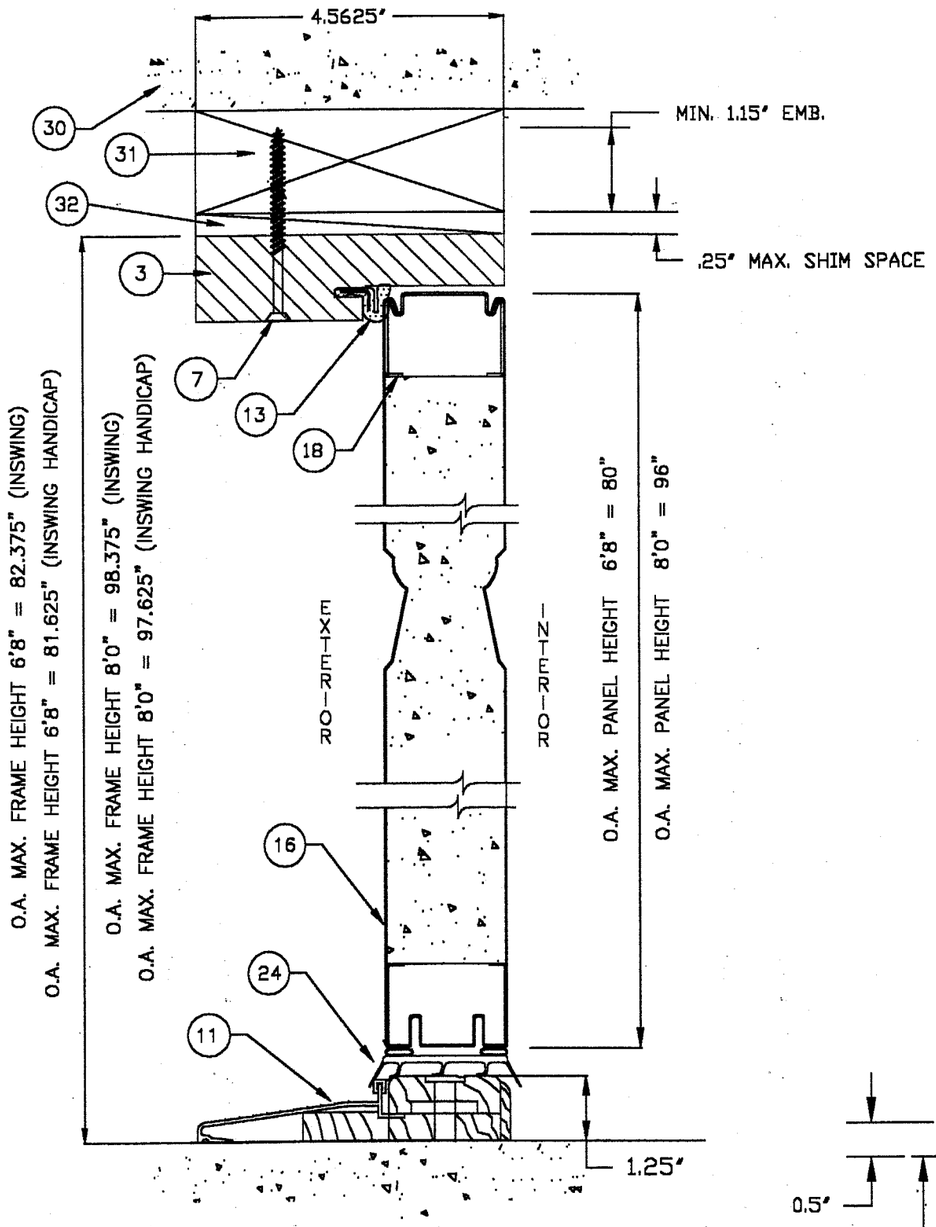

INSWING ADJUSTABLE THRESHOLD

ITEM	DESCRIPTION
1	Latch jamb (1.25" x 4.56" w 1/2" rabbet) Wood
2	Hinge jamb (1.25" x 4.56" w 1/2" rabbet) Wood
3	Head jamb (1.25" x 4.56" w 1/2" rabbet) Wood
4	4" x 4" butt hinges 12ga.(.097") Hager
5	#9 X 1" PFH wood screw (hinge to door)
6	#9 X 3/4" PFH wood screw (hinge to frame)
7	#8 x 3" PFH wood screw with 1.15" min. emb. into sub-buck
8	#10 x 2" PFH wood screw
9	3/16" tapcon (min. embedment 1-1/4" into masonry)
10	1/2" x 5.0" ADA Threshold Ext. Aluminum 6063-T5
11	1.25" x 4.56" inswing adjustable threshold Aluminum/Wood
12	N-A
13	Compression weatherstrip Schlegel Q-Lon QDS 650
14	# 12 X 3" PFH wood screw
15	# 9 x 1" PFH wood screw
16	Face sheet 24ga.(.020" thk.min)galv.steel A-525 FY=23,300 psi
17	# 8 x 2" PFH wood screw
18	Top Rail (1.73" x 1.21" x 0.021" thk) Steel
19	Bottom Rail (1.73" x 1.21" x 0.021" thk) Steel
20	Side stiles (1.73" x 1.21" x 0.021" thk) Steel
21	lock reinforcement (1.67" x 3.0"" x 18.75") Wood
22	Strike plate
23	1.18" x 1.18" x 94" MDF board
24	0.50" 1.69" Door Panel sweep Vinyl
25	lock reinforcement (1.67" x 3.0"" x 11.75") Wood
26	Expanded Polystyrene (1.0 to 1.25 lb. Density) BY JELD-WEN
27	Kwikset titan series lock (#200) Yale Heritage Series Latchbolt
28	Kwikset titan series deadbolt (#660) Yale Heritage Series Deadbolt
29	Latch screws #8 x 1-1/2" P.F.H. W.S.
30	Masonry wall
31	2x wood buck
32	1/4" max. shim space

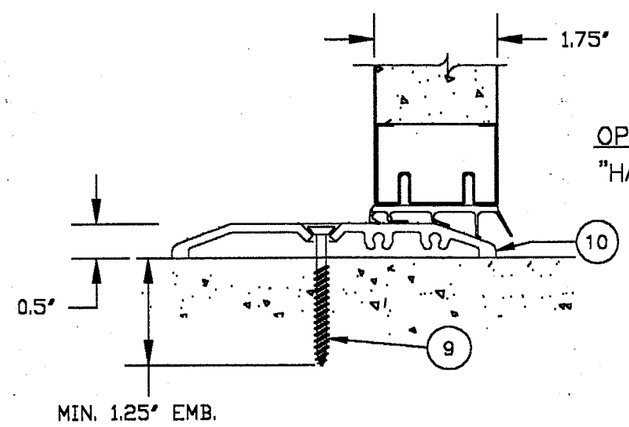

OPTIONAL

"HANDICAPPED" BARRIER FREE THRESHOLD

1/2 VERTICAL CROSS SECTIONS

APPROVED AS COMPLYING WITH THE SOUTH FLORIDA BUILDING CODE
DATE February 08, 2001
BY Manuel Cruz
PRODUCT CONTROL DIVISION
BUILDING CODE COMPLIANCE OFFICE
ACCEPTANCE NO. 00-1006.04

JELD-WEN, INC.
31725 HIGHWAY 97 NORTH
CHILOQUIN, OR. 97624
PH. 541.783.2057

PRODUCT: INSWING OPAQUE INSULATED STEEL SINGLE DOOR IN WOOD FRAME

PART OR ASSEMBLY: VERTICAL CROSS SECTIONS

NO.	DATE	REVISIONS	BY
1	1/10/01	6'8 ANCHORS	RW

RW BUILDING CONSULTANTS, INC.
813.684.3831

DATE: 9/25/00
SCALE: N.T.S.
DWG. BY: TJH
CHK. BY: RW
DRAWING NO.: DC9970-1
SHEET 2 OF 4

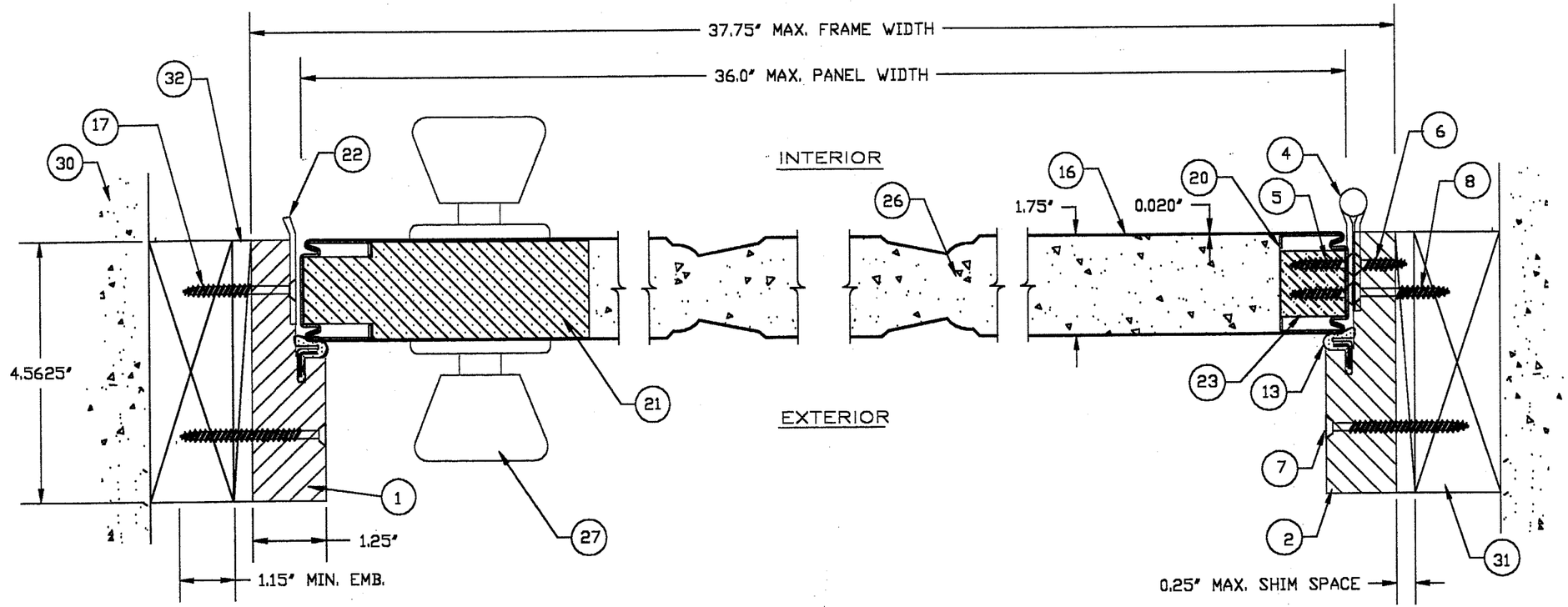

1/3 HORIZONTAL CROSS SECTION

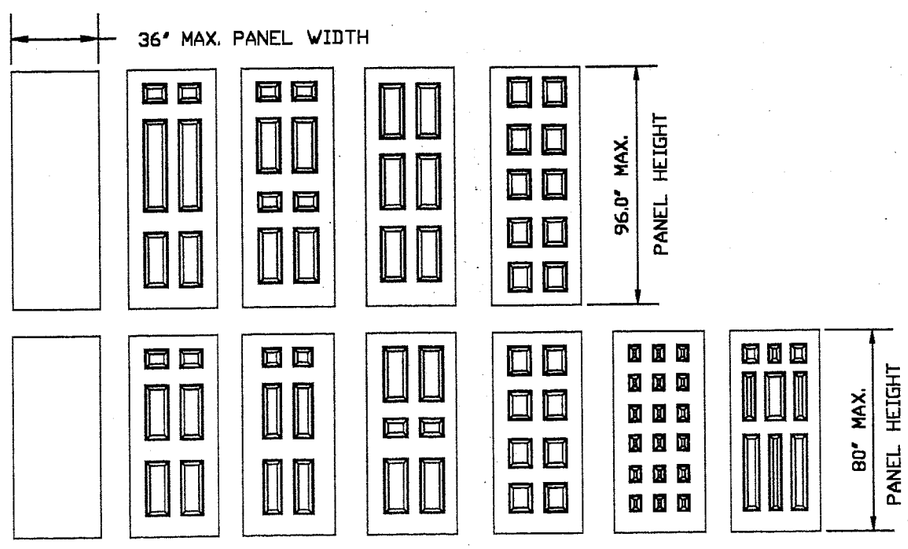

APPROVED AS COMPLYING WITH THE SOUTH FLORIDA BUILDING CODE
DATE February 08, 2001
BY Manuel Cruz
PRODUCT CONTROL DIVISION
BUILDING CODE COMPLIANCE OFFICE
ACCEPTANCE NO. 00-1006.04

JELD-WEN, INC.
31725 HIGHWAY 97 NORTH
CHILOQUIN, OR. 97624
PH. 541.783.2057

PRODUCT: INSWING OPAQUE INSULATED STEEL SINGLE DOOR IN WOOD FRAME

PART OR ASSEMBLY: HORIZONTAL CROSS SECTIONS

NO.	DATE	REVISIONS	BY
1	1/10/01	6'8 ANCHORS	RW

RW BUILDING CONSULTANTS, INC.
813.684.3831

DATE: 9/25/00
SCALE: N.T.S.
DWG. BY: TJH
CHK. BY: RW
DRAWING NO.: DC9970-I
SHEET 3 OF 4

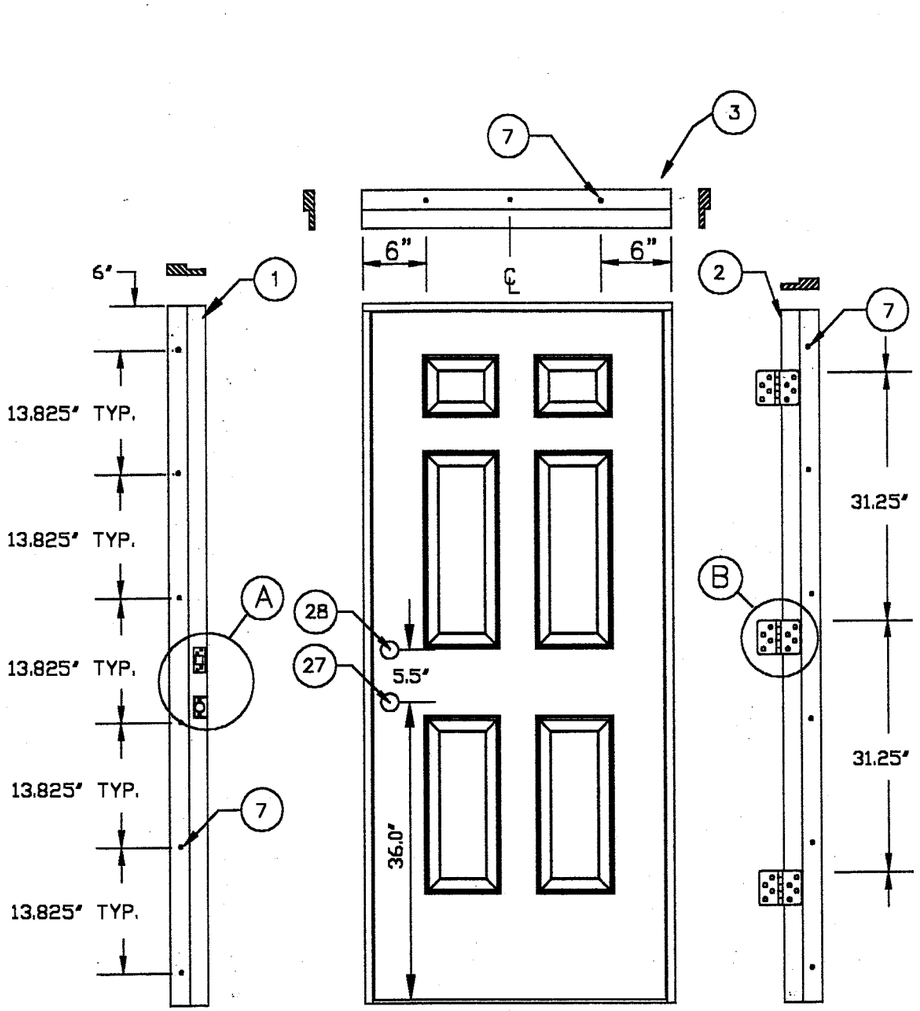

6'8 ANCHOR LOCATIONS

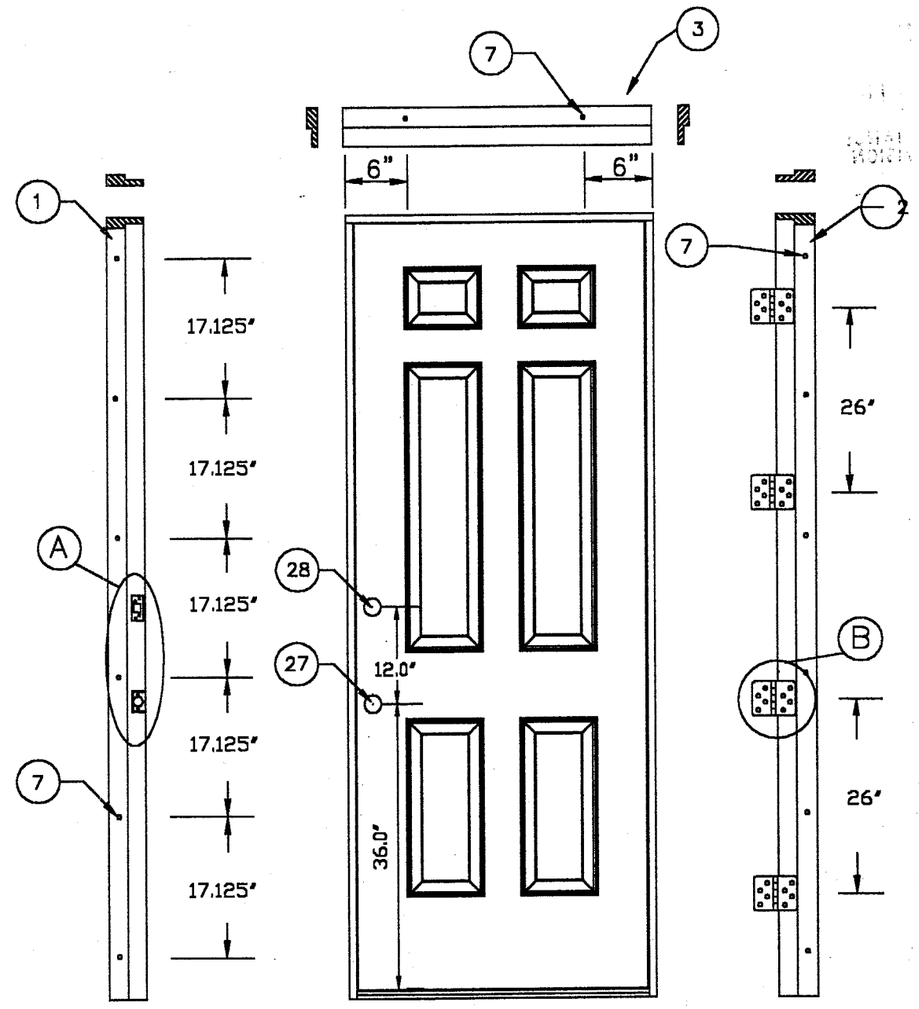

8'0 ANCHOR LOCATIONS

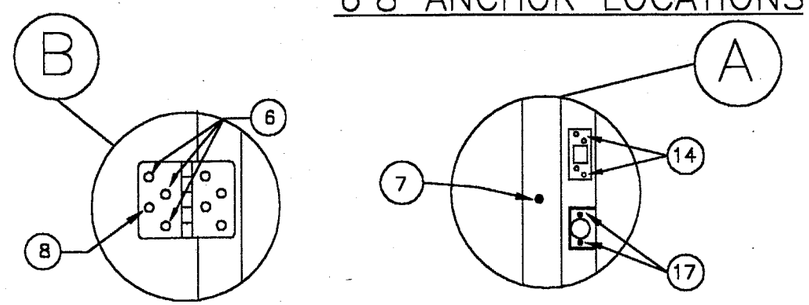

NOTE: HANDICAP THRESHOLD REQUIRES 3/16" TAPCON TYPE ANCHOR AT 6" FROM EACH END & ONE AT CENTER WITH 1.25" MIN EMBED. INTO MASONRY.

APPROVED AS COMPLYING WITH THE SOUTH FLORIDA BUILDING CODE
DATE February 08, 2001
BY Manuel Perez
PRODUCT CONTROL DIVISION
BUILDING CODE COMPLIANCE OFFICE
ACCEPTANCE NO. 00-1006.04

JELD-WEN, INC.
31725 HIGHWAY 97 NORTH
CHILOQUIN, OR. 97624
PH. 541.783.2057

PRODUCT: INSWING OPAQUE INSULATED STEEL SINGLE DOOR IN WOOD FRAME

PART OR ASSEMBLY: ANCHOR LOCATIONS

REVISIONS

NO.	DATE		BY
1	1/10/01	6'8 ANCHORS	RW

RW BUILDING CONSULTANTS, INC.
813.684.3831

DATE: 9/25/00
SCALE: N.T.S.
DWG. BY: TJH
CHK. BY: RW
DRAWING NO.: DC9970-1
SHEET 4 OF 4