MIAMI-DADE

MIAMI-DADE COUNTY, FLORIDA
METRO-DADE FLAGLER BUILDING

BUILDING CODE COMPLIANCE OFFICE
METRO-DADE FLAGLER BUILDING
140 WEST FLAGLER STREET, SUITE 1603
MIAMI, FLORIDA 33130-1563
(305) 375-2901 FAX (305) 375-2908

CONTRACTOR LICENSING SECTION
(305) 375-2527 FAX (305) 375-2558

CONTRACTOR ENFORCEMENT DIVISION
(305) 375-2966 FAX (305) 375-2908

PRODUCT CONTROL DIVISION
(305) 375-2902 FAX (305) 372-6339

PRODUCT CONTROL NOTICE OF ACCEPTANCE

R.B.S. Enterprises, Inc.
10122 NW 80 Avenue.
Hialeah Gardens ,FL 33016

Your application for Notice of Acceptance (NOA) of:
"HT-100" Aluminum Accordion Shutter
under Chapter 8 of the Code of Miami-Dade County governing the use of Alternate Materials and Types of Construction, and completely described herein, has been recommended for acceptance by the Miami-Dade County Building Code Compliance Office (BCCO) under the conditions specified herein.

This NOA shall not be valid after the expiration date stated below. BCCO reserves the right to secure this product or material at any time from a jobsite or manufacturer's plant for quality control testing. If this product or material fails to perform in the approved manner, BCCO may revoke, modify, or suspend the use of such product or material immediately. BCCO reserves the right to revoke this approval, if it is determined by BCCO that this product or material fails to meet the requirements of the South Florida Building Code.

The expense of such testing will be incurred by the manufacturer.

ACCEPTANCE NO.: 00-1010.01
EXPIRES: 01/18/2006

Raul Rodriguez
Chief Product Control Division

THIS IS THE COVERSHEET, SEE ADDITIONAL PAGES FOR SPECIFIC AND GENERAL CONDITIONS
BUILDING CODE & PRODUCT REVIEW COMMITTEE

This application for Product Approval has been reviewed by the BCCO and approved by the Building Code and Product Review Committee to be used in Miami-Dade County, Florida under the conditions set forth above.

Francisco J. Quintana, R.A.
Director
Miami-Dade County
Building Code Compliance Office

APPROVED: 01/18/2001

R. B. S. Enterprises, Inc.

ACCEPTANCE No. : 00-1010.01

APPROVED : 01/18/2001

EXPIRES : 01/18/2006

NOTICE OF ACCEPTANCE: SPECIFIC CONDITIONS

1. SCOPE

This approves an aluminum accordion type shutter, as described in Section 2 of this Notice of Acceptance, designed to comply with the South Florida Building Code, 1994 Edition for Miami-Dade County, for the locations where the pressure requirements, as determined by SFBC Chapter 23, do not exceed the Design Pressure Rating values indicated in the approved drawings.

2. PRODUCT DESCRIPTION

This aluminum accordion type shutter and its components shall be constructed in strict compliance with the following documents: Drawing No. 00-880, titled "R.B.S. HT100 Accordion Shutter", prepared by Knezevich & Associates, Inc., dated July 23, 1996, revision #6 dated June 10, 1999, sheets 1 through 6 of 6, bearing the Miami-Dade County Product Control Approval stamp with the Notice of Acceptance number and approval date by the Miami-Dade County Product Control Division. These documents shall hereinafter be referred to as the approved drawings.

3. LIMITATIONS

All permanent set components, included but not limited to embedded anchor bolts, threaded cones, metal shields, headers and sills, must be protected against corrosion, contamination and damage at all times.

4. INSTALLATION

This aluminum accordion type shutter and its components shall be installed in strict compliance with the approved drawings.

5. LABELING

Each unit shall bear a permanent label with the manufacturer's name or logo, city, state and the following statement: "Miami-Dade County Product Control Approved".

6. BUILDING PERMIT REQUIREMENTS

6.1 Application for building permit shall be accompanied by copies of the following:

6.1.1 This Notice of Acceptance.

6.1.2 Duplicate copies of the approved drawings, as identified in Section 2 of this Notice of Acceptance, clearly marked to show the components selected for the proposed installation.

6.1.3 Any other documents required by the Building Official or the South Florida Building Code (SFBC) in order to properly evaluate the installation of this system.

Helmy A. Makar

Helmy A. Makar, P.E.- Product Control Examiner
Product Control Division

R. B. S. Enterprises, Inc.

ACCEPTANCE No. : 00-1010.01

APPROVED : 01/18/2001

EXPIRES : 01/18/2006

NOTICE OF ACCEPTANCE: STANDARD CONDITIONS

1 Renewal of this Acceptance (approval) shall be considered after a renewal application has been filed and the original submitted documents, including test-supporting data, engineering documents, are no older than eight (8) years.

2. Any and all approved products shall be permanently labeled with the manufacturer's name, city, state, and the following statement: "Miami-Dade County Product Control Approved", or as specifically stated in the specific conditions of this Acceptance.

3. Renewals of Acceptance will not be considered if:
   a. There has been a change in the South Florida Building Code affecting the evaluation of this product and the product is not in compliance with the code changes.
   b. The product is no longer the same product (identical) as the one originally approved.
   c. If the Acceptance holder has not complied with all the requirements of this acceptance, including the correct installation of the product.
   d. The engineer, who originally prepared, signed and sealed the required documentation initially submitted, is no longer practicing the engineering profession.

4. Any revision or change in the materials, use, and/or manufacture of the product or process shall automatically be cause for termination of this Acceptance, unless prior written approval has been requested (through the filing of a revision application with appropriate fee) and granted by this office.

5. Any of the following shall also be grounds for removal of this Acceptance:
   a. Unsatisfactory performance of this product or process.
   b. Misuse of this Acceptance as an endorsement of any product, for sales, advertising or any other purposes.

6. The Notice of Acceptance number preceded by the words Miami-Dade County, Florida, and followed by the expiration date may be displayed in advertising literature. If any portion of the Notice of Acceptance is displayed, then it shall be done in its entirety.

7. A copy of this Acceptance as well as approved drawings and other documents, where it applies, shall be provided to the user by the manufacturer or its distributors and shall be available for inspection at the job site at all time. The engineer needs not reseal the copies.

8. Failure to comply with any section of this Acceptance shall be cause for termination and removal of Acceptance.

9. This Notice of Acceptance consists of pages 1, 2 and this last page 3.

END OF THIS ACCEPTANCE

Helmy A. Makar, P.E.- Product Control Examiner
Product Control Division

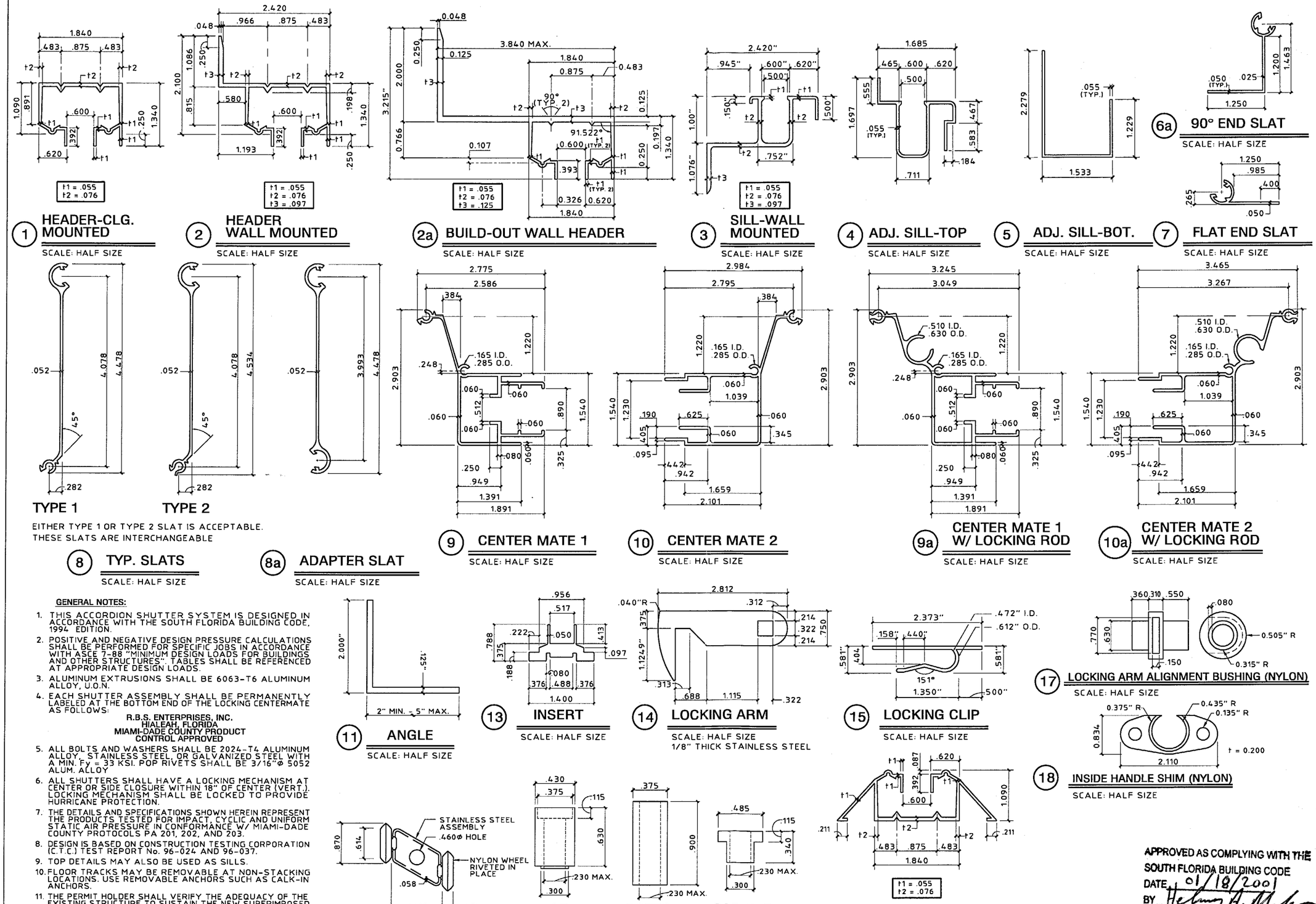

GENERAL NOTES:

1. THIS ACCORDION SHUTTER SYSTEM IS DESIGNED IN ACCORDANCE WITH THE SOUTH FLORIDA BUILDING CODE, 1994 EDITION.
2. POSITIVE AND NEGATIVE DESIGN PRESSURE CALCULATIONS SHALL BE PERFORMED FOR SPECIFIC JOBS IN ACCORDANCE WITH ASCE 7-88 "MINIMUM DESIGN LOADS FOR BUILDINGS AND OTHER STRUCTURES". TABLES SHALL BE REFERENCED AT APPROPRIATE DESIGN LOADS.
3. ALUMINUM EXTRUSIONS SHALL BE 6063-T6 ALUMINUM ALLOY, U.O.N.
4. EACH SHUTTER ASSEMBLY SHALL BE PERMANENTLY LABELED AT THE BOTTOM END OF THE LOCKING CENTERMATE AS FOLLOWS:

   R.B.S. ENTERPRISES, INC.
   HIALEAH, FLORIDA
   MIAMI-DADE COUNTY PRODUCT CONTROL APPROVED
5. ALL BOLTS AND WASHERS SHALL BE 2024-T4 ALUMINUM ALLOY, STAINLESS STEEL, OR GALVANIZED STEEL WITH A MIN. Fy = 33 KSI. POP RIVETS SHALL BE 3/16"Ø 5052 ALUM. ALLOY
6. ALL SHUTTERS SHALL HAVE A LOCKING MECHANISM AT CENTER OR SIDE CLOSURE WITHIN 18" OF CENTER (VERT.). LOCKING MECHANISM SHALL BE LOCKED TO PROVIDE HURRICANE PROTECTION.
7. THE DETAILS AND SPECIFICATIONS SHOWN HEREIN REPRESENT THE PRODUCTS TESTED FOR IMPACT, CYCLIC AND UNIFORM STATIC AIR PRESSURE IN CONFORMANCE W/ MIAMI-DADE COUNTY PROTOCOLS PA 201, 202, AND 203.
8. DESIGN IS BASED ON CONSTRUCTION TESTING CORPORATION (C.T.C.) TEST REPORT No. 96-024 AND 96-037.
9. TOP DETAILS MAY ALSO BE USED AS SILLS.
10. FLOOR TRACKS MAY BE REMOVABLE AT NON-STACKING LOCATIONS. USE REMOVABLE ANCHORS SUCH AS CALK-IN ANCHORS.
11. THE PERMIT HOLDER SHALL VERIFY THE ADEQUACY OF THE EXISTING STRUCTURE TO SUSTAIN THE NEW SUPERIMPOSED LOADS AND TO VERIFY ALL DIMENSIONS AT THE JOB SITE BEFORE COMMENCING WITH THE WORK.
12. ANCHORS SHALL BE INSTALLED IN ACCORDANCE WITH MANUFACTURER'S RECOMMENDATIONS. EMBEDMENT LENGTHS SHALL BE AS NOTED AND DO NOT INCLUDE STUCCO OR OTHER FINISHES.

APPROVED AS COMPLYING WITH THE SOUTH FLORIDA BUILDING CODE
DATE 01/18/2001
BY Helmy H. Mekkawy
PRODUCT CONTROL DIVISION
BUILDING CODE COMPLIANCE OFFICE
ACCEPTANCE NO. 00-1010.01

KNEZEVICH & ASSOCIATES, INC.
CONSULTING ENGINEERS • PRODUCT TESTING
1260 N. UNIVERSITY DRIVE, SUITE 180 • FORT LAUDERDALE, FL 33322
TEL: (954) 382-2800 • FAX: (954) 382-2989 • FLORIDA COA #3205
WEBSITE: WWW.KNEZEVICH.COM • E-MAIL: KA@KNEZEVICH.COM

COPYRIGHT © 2000 KNEZEVICH & ASSOCIATES, INC.
HT100 LICENSED BY HI-TECH SHUTTER GROUP, INC.

R.B.S. HT100
ACCORDION SHUTTER

R.B.S. ENTERPRISES, INC. • SHUTTERS • METALS
10122 N.W. 80TH AVENUE
HIALEAH GARDENS, FL 33016
TEL: (305) 888-8664
FAX: (305) 885-0080

revisions

no	date	by	description
1	08/08/96		NEW TEST DATA ADDED
2	10/10/96		COUNTY COMMENTS
3	11/26/97	JWK	REVISE FASTENERS
4	01/16/98	JWK	FASTENER NOTES
5	04/30/98	JWK	SLAT 2/REV 2,4 DESC.
6	06/10/99	VJK	CENTER MATES/FASTENERS

HTSG I.D. #1002009616 8D

V.J. KNEZEVICH
PROFESSIONAL ENGINEER
FL License No: PE 0010983

OCT 02 2000

date 7/23/96	
scale AS NOTED	drawn by MC
design by VJK	checked by VJK
drawing no. 00-880	
sheet 1 of 6	

00-1010.01

10/02/00 14:38

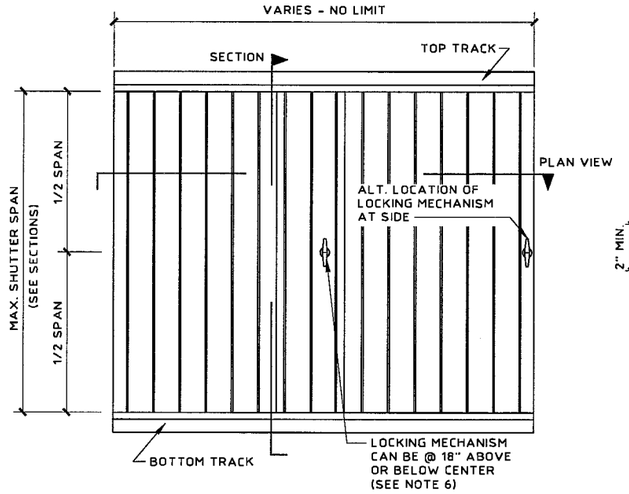

TYPICAL ELEVATION

N.T.S.

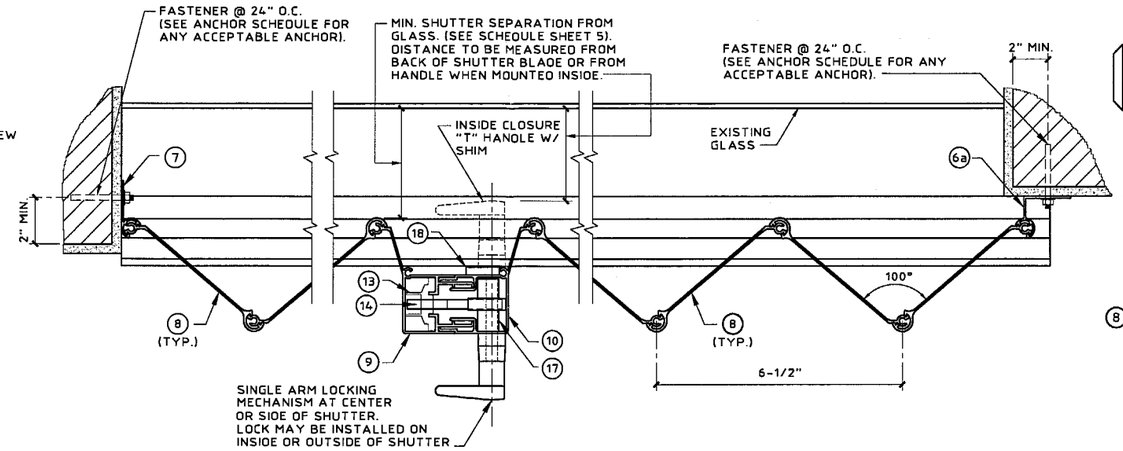

TYPICAL PLAN VIEW

SCALE: 3" = 1'-0"

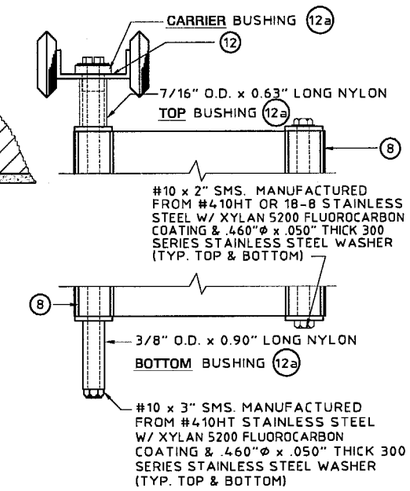

SCREW BUSHING & ROLLER/ BUSHING ASSEMBLY

SCALE: HALF SIZE

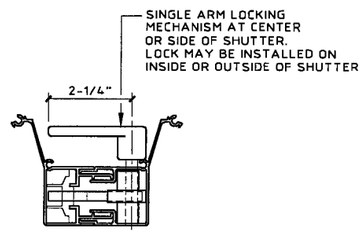

SINGLE ARM LOCK

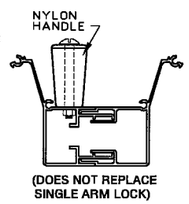

OPTIONAL CLOSER HANDLE

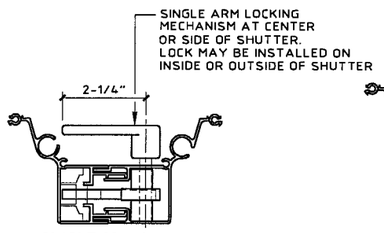

SINGLE ARM LOCK

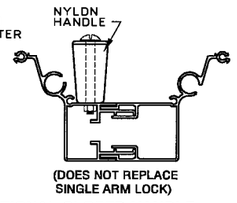

OPTIONAL CLOSER HANDLE

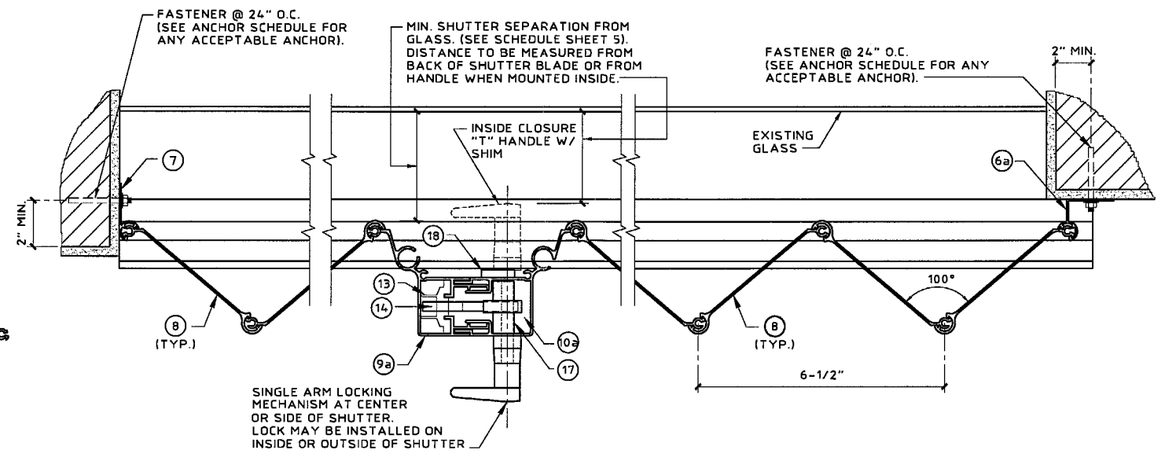

OPTIONAL PLAN VIEW

SCALE: 3" = 1'-0"

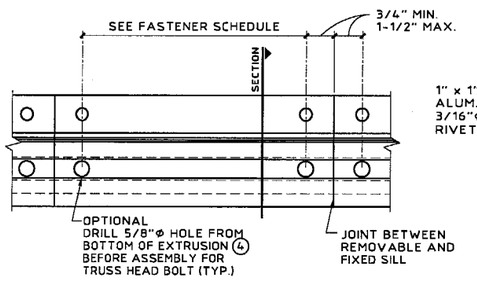

PLAN VIEW

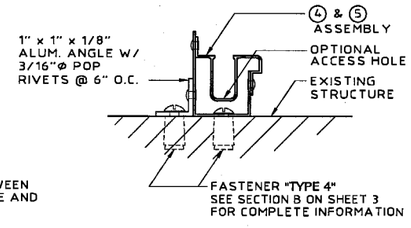

SECTION

REMOVABLE FLOOR TRACK DETAIL

SCALE : 3"= 1'- 0"

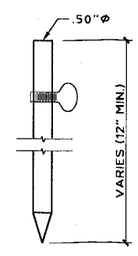

USED WITH PIECES 9a AND 10a

LOCKING PIN

SCALE: 1-1/2" = 1'-0"

APPROVED AS COMPLYING WITH THE SOUTH FLORIDA BUILDING CODE
DATE 01/18/2001
BY [signature]
PRODUCT CONTROL DIVISION
BUILDING CODE COMPLIANCE OFFICE
ACCEPTANCE NO. 00-1010.01

KNEZEVICH & ASSOCIATES, INC.
CONSULTING ENGINEERS • PRODUCT TESTING
1260 N. UNIVERSITY DRIVE, SUITE 180 • FORT LAUDERDALE, FL 33322
TEL: (954) 382-2800 • FAX: (954) 382-2989 • FLORIDA COA #3205
WEBSITE: WWW.KNEZEVICH.COM • E-MAIL: KA@KNEZEVICH.COM

COPYRIGHT © 2000 KNEZEVICH & ASSOCIATES, INC.

HT100 LICENSED BY HI-TECH SHUTTER GROUP, INC.

HT100
R.B.S. ACCORDION SHUTTER

R.B.S. ENTERPRISES, INC.
10122 N.W. 80TH AVENUE
HIALEAH GARDENS, FL 33016
TEL: (305) 885-0565
FAX: (305) 885-0680

revisions

no	date	by	description
1	08/08/96		NEW TEST DATA ADDED
2	10/10/96		COUNTY COMMENTS
3	11/26/97	JWK	REVISE FASTENERS
4	01/16/98	JWK	FASTENER NOTES
5	02/30/98	JWK	SLAT 2/REV 2.4 DESC.
6	06/10/99	VJK	CENTER MATES/FASTENERS

HTSG I.D. #10020096168D

V.J. KNEZEVICH
PROFESSIONAL ENGINEER
FL License No: PE 0010933

OCT 02 2000

date 07/23/96	
scale AS NOTED	drawn by MC
design by VJK	checked by VJK

drawing no. 00-880

sheet 2 of 6

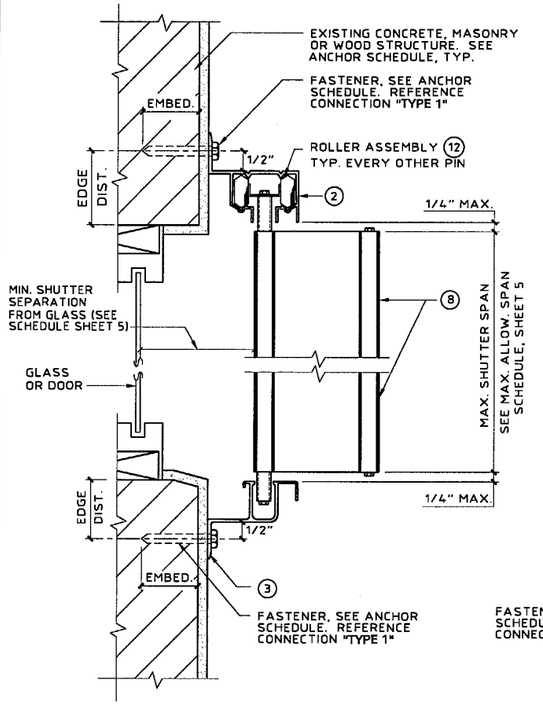

Ⓐ **WALL MOUNT SECTION**

SCALE : 3"= 1'- 0"

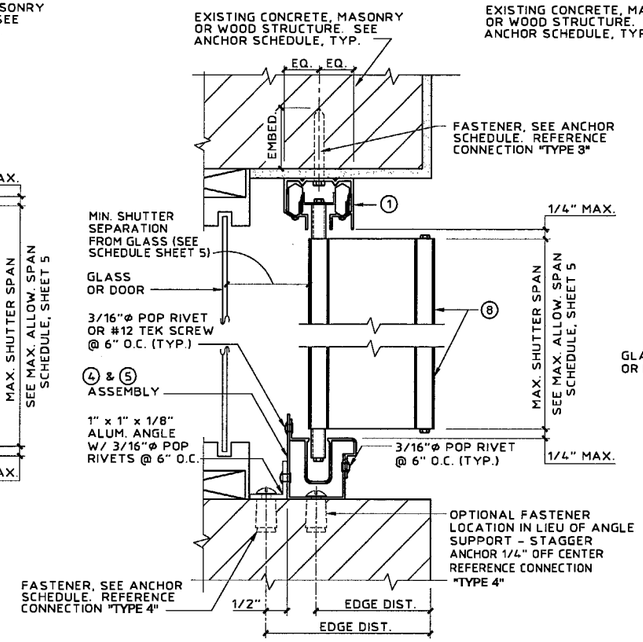

Ⓑ **CEILING/INSIDE MOUNT SECTION**

SCALE : 3"= 1'- 0"

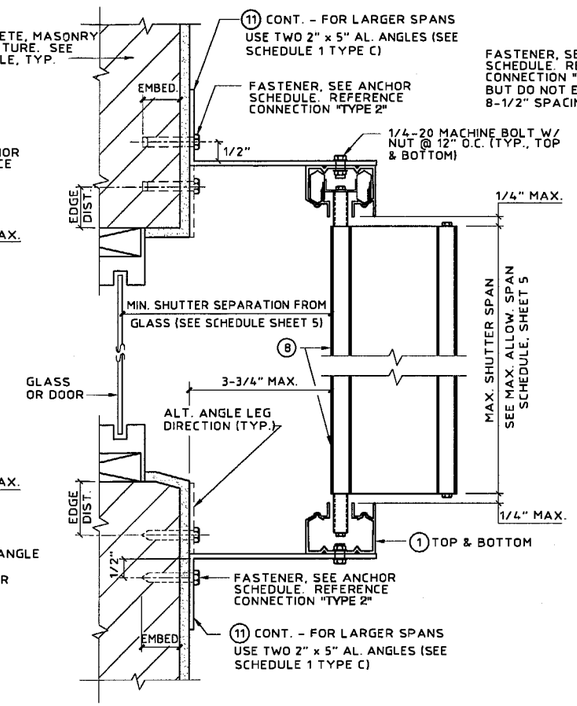

Ⓒ **BUILD-OUT MOUNT SECTION**

SCALE : 3"= 1'- 0"

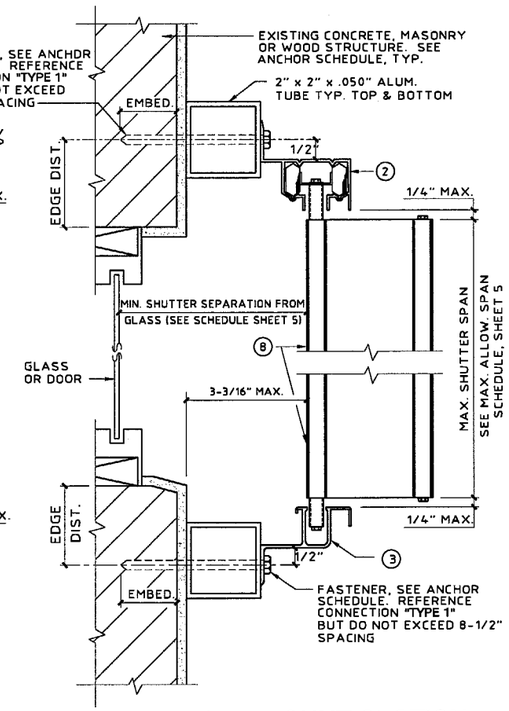

Ⓓ **BUILD-OUT MOUNT SECTION**

SCALE : 3" = 1'-0"

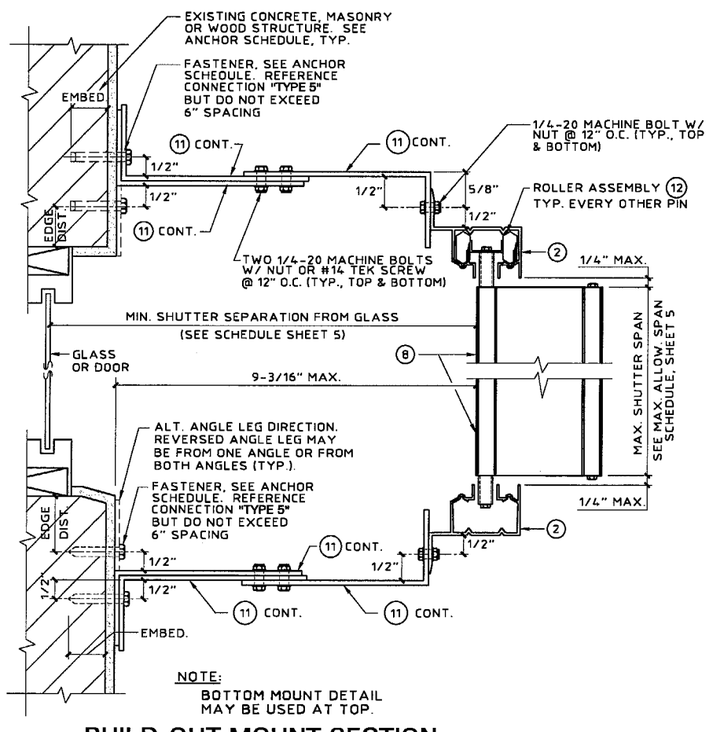

NOTE:
BOTTOM MOUNT DETAIL MAY BE USED AT TOP.

Ⓔ **BUILD-OUT MOUNT SECTION**

SCALE : 3"= 1'- 0"

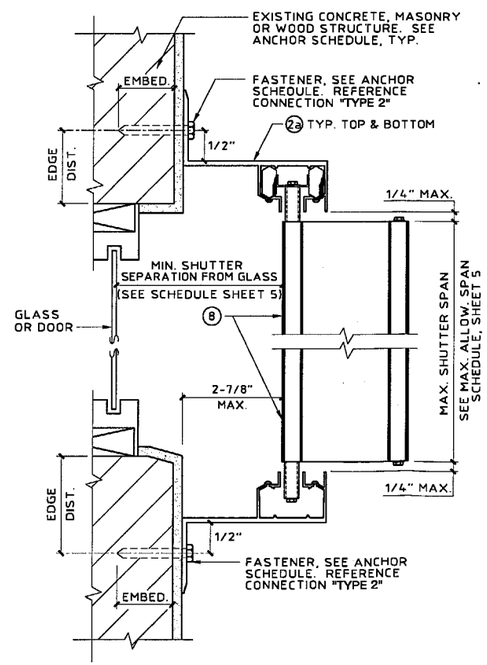

Ⓕ **BUILD-OUT MOUNT SECTION**

SCALE : 3"= 1'- 0"

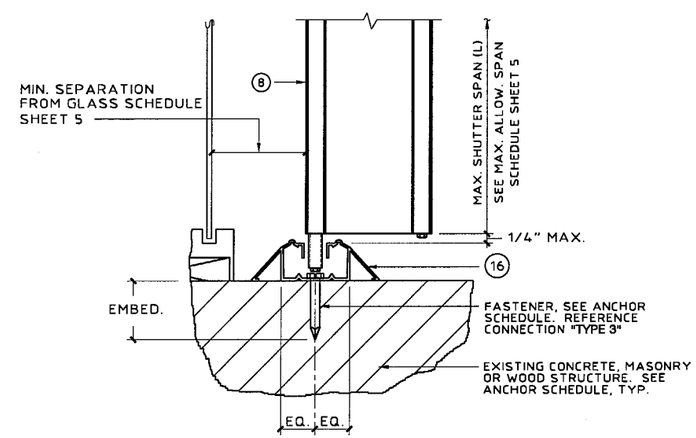

Ⓖ **FLOOR MOUNT SECTION**

SCALE : 3"= 1'- 0"

APPROVED AS COMPLYING WITH THE SOUTH FLORIDA BUILDING CODE
DATE 01/18/2001
BY Helmy H. Meter
PRODUCT CONTROL DIVISION
BUILDING CODE COMPLIANCE OFFICE
ACCEPTANCE NO. 00-1010.01

KNEZEVICH & ASSOCIATES, INC.
CONSULTING ENGINEERS • PRODUCT TESTING
1260 N. UNIVERSITY DRIVE, SUITE 180 • FORT LAUDERDALE, FL 33322
TEL: (954) 382-2800 • FAX: (954) 382-2989 • FLORIDA COA #3205
WEBSITE: WWW.KNEZEVICH.COM • E-MAIL: KA@KNEZEVICH.COM

COPYRIGHT © 2000 KNEZEVICH & ASSOCIATES, INC.

HT100 LICENSED BY HI-TECH SHUTTER GROUP, INC.

R.B.S. HT100
ACCORDION SHUTTER

R.B.S. ENTERPRISES, INC. SHUTTERS GLASS METALS
10122 N.W. 80TH AVENUE
HIALEAH GARDENS, FL 33016
TEL: (305) 888-8664
FAX: (305) 885-0080

revisions

no	date	by	description
1	08/08/96		NEW TEST DATA ADDED
2	10/10/96		COUNTY COMMENTS
3	11/26/97	JWK	REVISE FASTENERS
4	01/14/98	JWK	FASTENER NOTES
5	04/30/98	JWK	SLAT 2/REV 2,4 DESC.
6	06/10/99	VJK	CENTER MATES/FASTENERS

HTSG I.D. #1002009616 8D

V.J. KNEZEVICH
PROFESSIONAL ENGINEER
FL License No: PE 0010983

OCT 02 2000

date 07/23/96
scale AS NOTED
drawn by MC
design by VJK
checked by VJK
drawing no. 00-880
sheet 3 of 6

10/02/00 14:39

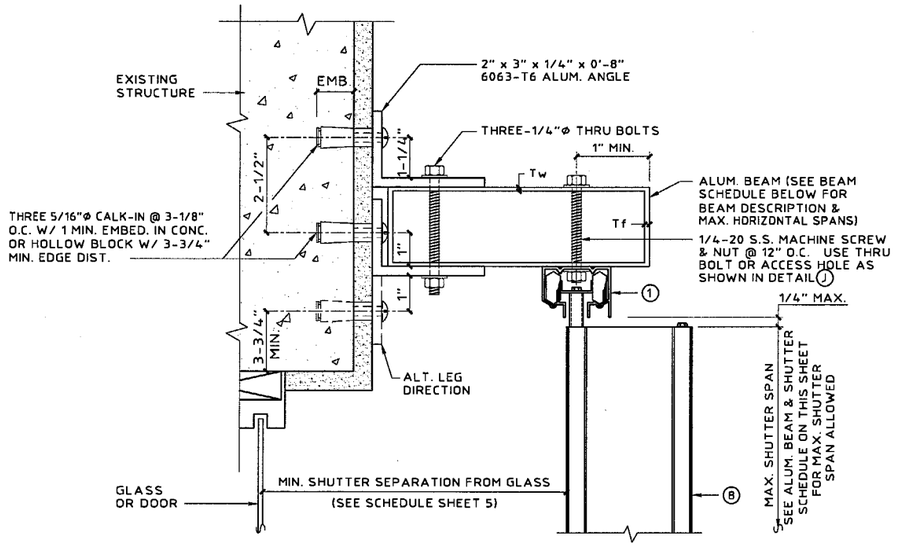

(MAX. DESIGN LOAD ± 72 PSF)

(H) TOP SUPPORT BEAM DETAIL

SCALE : 3"= 1'- 0"

ALUM. BEAM & SHUTTER SCHEDULE		
DESCRIPTION	SHUTTER SPAN	BEAM SPAN
2" x 5" Tw = .125" Tf = .125"	5'-0"	9'-5"
	8'-0"	8'-1"
	10'-0"	7'-6"
2" x 8" Tw = .072" Tf = .224"	5'-0"	14'-0"
	8'-0"	12'-0"
	10'-0"	11'-1"
2" x 9" Tw = .072" Tf = .224"	5'-0"	15'-5"
	8'-0"	13'-2"
	10'-0"	12'-3"

NOTE:
1. USE BEAM SCHEDULE FOR DETAILS (H) AND (J).
2. SHUTTER SPAN TO BE LIMITED TO THOSE SHOWN IN TABLE, SHEET 5.
3. BEAM SPAN SHALL BE CONSIDERED AS THE DISTANCE FROM ℄ OF SUPPORT TO ℄ OF SUPPORT.

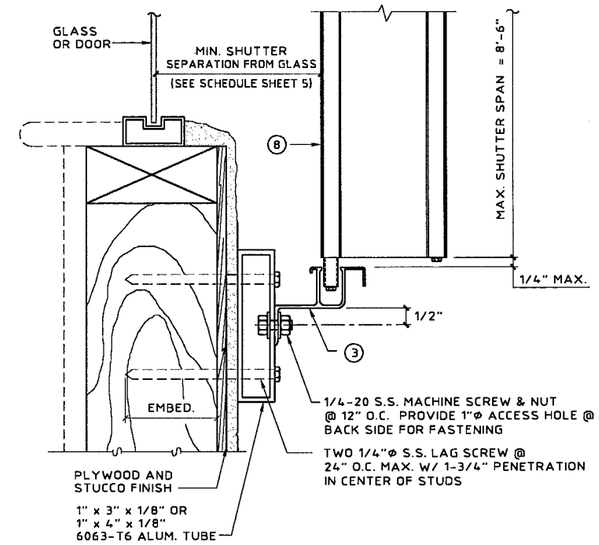

(MAX. DESIGN LOAD = ± 72 P.S.F.)

(I) WALL MOUNT SECTION - USING ALUM. TUBE

SCALE : 3"= 1'- 0"

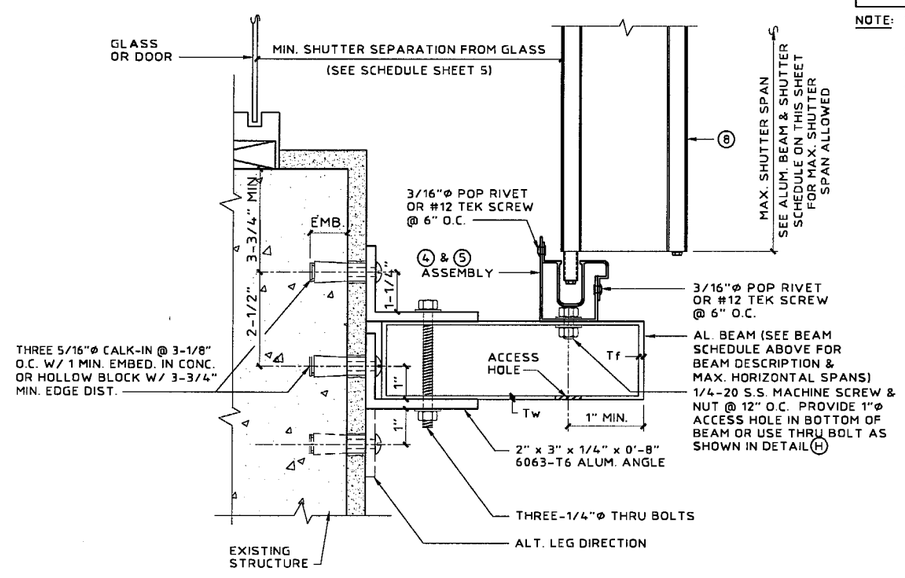

(MAX. DESIGN LOAD ± 72 PSF)

(J) BOTTOM SUPPORT BEAM DETAIL

SCALE : 3"= 1'- 0"

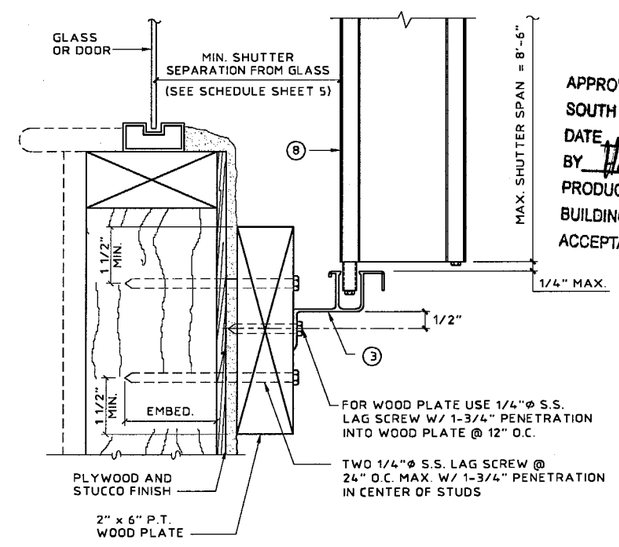

APPROVED AS COMPLYING WITH THE SOUTH FLORIDA BUILDING CODE
DATE 01/18/2001
BY [signature]
PRODUCT CONTROL DIVISION
BUILDING CODE COMPLIANCE OFFICE
ACCEPTANCE NO. 00-1010.01

(MAX. DESIGN LOAD = ± 72 P.S.F.)

(K) WALL MOUNT SECTION - USING 2" x 6" WOOD PLATE

SCALE : 3"= 1'- 0"

KNEZEVICH & ASSOCIATES, INC.
CONSULTING ENGINEERS • PRODUCT TESTING
1260 N. UNIVERSITY DRIVE, SUITE 180 • FORT LAUDERDALE, FL 33322
TEL: (954) 382-2800 • FAX: (954) 382-2989 • FLORIDA COA #3205
WEBSITE: WWW.KNEZEVICH.COM • E-MAIL: KA@KNEZEVICH.COM

COPYRIGHT © 2000 KNEZEVICH & ASSOCIATES, INC.

HT100 LICENSED BY HI-TECH SHUTTER GROUP, INC.

R.B.S. HT100
ACCORDION SHUTTER

R.B.S. ENTERPRISES, INC.
SHUTTERS • GLASS • METALS
10122 N.W. 80TH AVENUE
HIALEAH GARDENS, FL 33016
TEL: (305) 885-0660
FAX: (305) 885-0680

revisions

no	date	by	description
1	08/08/96		NEW TEST DATA ADDED
2	10/10/96		COUNTY COMMENTS
3	11/26/97	JWK	REVISE FASTENERS
4	01/14/98	JWK	FASTENER NOTES
5	04/30/98	JWK	SLAT 2/REV 2.4 DESC.
6	06/10/99	VJK	CENTER MATES/FASTENERS

HTSG I.D. #1002009616 8D

V.J. KNEZEVICH
PROFESSIONAL ENGINEER
FL License No: PE 0010983

OCT 02 2000

date 07/23/96	
scale AS NOTED	drawn by MC
design by VJK	checked by VJK

drawing no. 00-880

sheet 4 of 6

10/02/00 14:39

TABLE 1

MAXIMUM ALLOWABLE SPAN SCHEDULE

NEG. DESIGN LOAD (PSF)	TYPE A ALL MOUNTING CONDITIONS EXCEPT Ⓒ Ⓔ Ⓕ (FT - IN)	TYPE B DETAIL Ⓕ OR DETAIL Ⓒ W/ SINGLE ANGLE REQUIRED 3-3/4" MAX. B.O. (FT - IN)	TYPE C DETAIL Ⓒ DOUBLE ANGLE REQUIRED 3-3/4" MAX. B.O. (FT - IN)	TYPE D DETAIL Ⓔ 9-3/16" MAX. B.O. (FT - IN)
30.0	13 - 1	12 - 4	13 - 1	12 - 7
38.0	13 - 1	11 - 0	13 - 1	11 - 2
40.0	12 - 11	10 - 8	12 - 5	10 - 11
48.0	12 - 4	9 - 9	10 - 4	10 - 0
52.0	12 - 1	9 - 4	9 - 7	9 - 7
56.0	11 - 11	9 - 0	9 - 0	9 - 3
61.5	11 - 7	8 - 7	8 - 7	8 - 10
63.3	11 - 6	8 - 6	8 - 6	8 - 8
66.8	10 - 11	8 - 3	8 - 3	8 - 5
67.5	10 - 9	8 - 3	8 - 3	8 - 5
71.2	10 - 3	8 - 0	8 - 0	8 - 2
75.0	9 - 8	7 - 8	7 - 8	8 - 0
81.4	8 - 11	7 - 0	7 - 0	7 - 4
86.8	8 - 5	6 - 7	6 - 7	6 - 10
91.4	8 - 0	6 - 3	6 - 3	6 - 6
100.0	7 - 3	5 - 9	5 - 9	6 - 0
110.0	6 - 7	5 - 2	5 - 2	5 - 5
120.0	6 - 1	4 - 9	4 - 9	5 - 0
130.0	5 - 7	4 - 5	4 - 5	4 - 7
140.0	5 - 2	4 - 1	4 - 1	4 - 3
150.0	4 - 10	3 - 10	3 - 10	4 - 0
160.0	4 - 6	3 - 7	3 - 7	3 - 9
170.0	4 - 3	3 - 4	3 - 4	3 - 6
180.0	4 - 0	3 - 2	3 - 2	3 - 4
190.0	3 - 10	3 - 0	3 - 0	3 - 1
200.0	3 - 7	2 - 10	2 - 10	3 - 0
210.0	3 - 5	2 - 8	2 - 8	2 - 10

NOTES:

1. REFERENCE APPROPRIATE COLUMN IN TABLE 1 BASED ON MOUNTING CONDITION IN FIELD.
2. FOR DESIGN LOADS BETWEEN TABULATED VALUES, USE NEXT HIGHER LOAD OR LINEAR INTERPOLATION MAY BE USED TO DETERMINE ALLOWABLE SPANS.
3. ENTER TABLE 1 WITH NEGATIVE DESIGN LOAD TO DETERMINE MAX. SHUTTER SPAN.
4. ENTER TABLE 2 WITH POSITIVE DESIGN LOAD TO DETERMINE MIN. SHUTTER SEPARATION FROM GLASS.

TABLE 2

MINIMUM SHUTTER SEPARATION FROM GLASS (IN)

POSITIVE DESIGN LOAD (W) (PSF)	ACTUAL SPAN (FT - IN)	MIN. SEPARATION FROM GLASS FOR INSTALLATIONS LESS THAN 30' ABOVE GRADE (INCHES)	MIN. SEPARATION FROM GLASS FOR INSTALLATIONS GREATER THAN 30' ABOVE GRADE (INCHES)
30.0	5 - 0	2-7/8	1-1/2
	7 - 0	2-7/8	1-5/8
	8 - 0	2-7/8	1-5/8
	11 - 0	3	2-1/8
	13 - 1	3-3/4	2-3/4
40.0	5 - 0	2-7/8	1-1/2
	7 - 0	2-7/8	1-5/8
	8 - 0	2-7/8	1-5/8
	11 - 0	3	2-1/4
	12 - 11	3-3/4	3
50.0	5 - 0	2-7/8	1-1/2
	7 - 0	2-7/8	1-5/8
	8 - 0	2-7/8	1-3/4
	11 - 0	3	2-1/2
	12 - 2	3-3/4	3
60.0	5 - 0	2-7/8	1-1/2
	7 - 0	2-7/8	1-5/8
	8 - 0	2-7/8	1-3/4
	11 - 0	3	1-3/4
	11 - 8	3-3/4	3
70.0	5 - 0	2-7/8	1-1/2
	7 - 0	2-7/8	1-5/8
	8 - 0	2-7/8	1-7/8
	9 - 6	3	2-1/4
	10 - 4	3	2-5/8
80.0	5 - 0	2-7/8	1-1/2
	7 - 0	2-7/8	1-3/4
	8 - 0	2-7/8	1-7/8
	11 - 0	3-1/8	3-1/8
	12 - 1	4	4
90.0	5 - 0	2-7/8	1-1/2
	7 - 0	2-7/8	1-3/4
	8 - 0	2-7/8	2
	11 - 0	3-3/8	3-3/8
	11 - 6	3-7/8	4
100.0	5 - 0	2-7/8	1-1/2
	7 - 0	2-7/8	1-3/4
	8 - 0	2-7/8	2
	9 - 0	3	2-3/4
	10 - 3	3	3

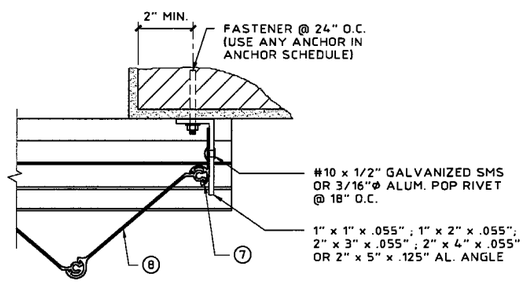

(L) ALT. CLOSURE DETAIL

SCALE: 3" = 1'-0"

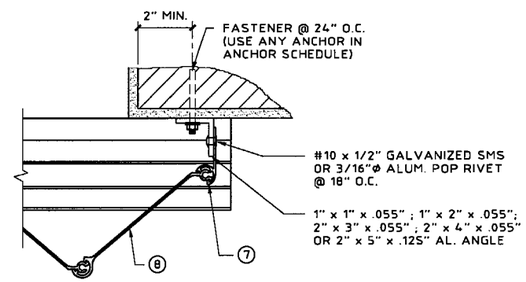

(M) ALT. CLOSURE DETAIL

SCALE: 3" = 1'-0"

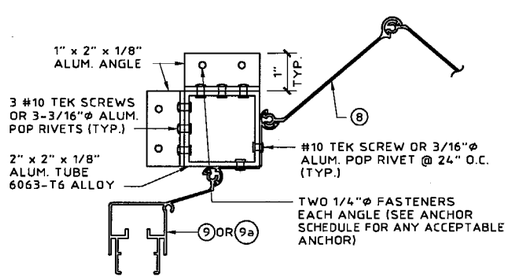

NOTE:
EITHER CONDITION MAY BE TYPICAL FOR EITHER SIDE

(N) CORNER CLOSURE DETAIL

SCALE: 3" = 1'-0"

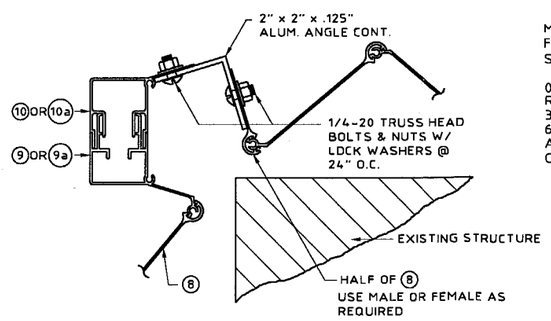

(P) ALT. CORNER CLOSURE DETAIL

SCALE: 3" = 1'-0"

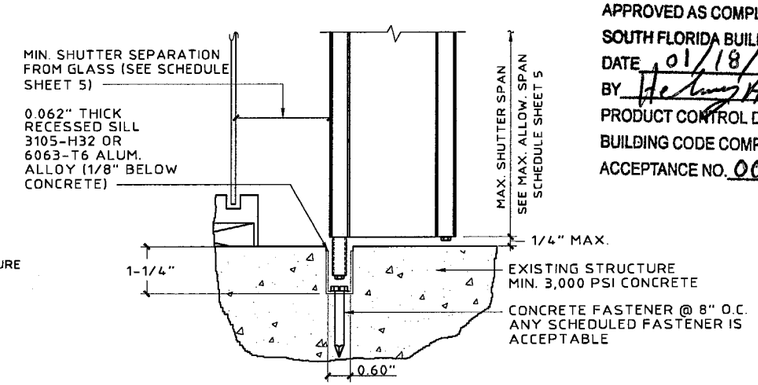

(Q) ALTERNATE FLOOR MOUNT DETAIL

SCALE : 3"= 1'- 0"

APPROVED AS COMPLYING WITH THE
SOUTH FLORIDA BUILDING CODE
DATE 01/18/2001
BY [signature]
PRODUCT CONTROL DIVISION
BUILDING CODE COMPLIANCE OFFICE
ACCEPTANCE NO. 00-1010.01

KNEZEVICH & ASSOCIATES, INC.
CONSULTING ENGINEERS • PRODUCT TESTING
1260 N. UNIVERSITY DRIVE, SUITE 180 • FORT LAUDERDALE, FL 33322
TEL: (954) 382-2900 • FAX: (954) 382-2989 • FLORIDA COA #3205
WEBSITE: WWW.KNEZEVICH.COM • E-MAIL: KA@KNEZEVICH.COM

COPYRIGHT © 2000 KNEZEVICH & ASSOCIATES, INC.
HT100 LICENSED BY HI-TECH SHUTTER GROUP, INC.

R.B.S. HT100
ACCORDION SHUTTER

R.B.S. ENTERPRISES, INC.
10122 N.W. 80TH AVENUE
HIALEAH GARDENS, FL 33016
TEL: (305) 888-8664
FAX: (305) 885-0660

revisions

no	date	by	description
1	08/08/96		NEW TEST DATA ADDED
2	10/10/96		COUNTY COMMENTS
3	11/26/97	JWK	REVISE FASTENERS
4	01/14/98	JWK	FASTENER NOTES
5	04/30/98	JWK	SLAT 2/REV 2,4 DESC.
6	06/10/99	VJK	CENTER MATES/FASTENERS

HTSG I.D. #1002009616 8D

V.J. KNEZEVICH
PROFESSIONAL ENGINEER
FL License No: PE 0010983

OCT 02 2000

date 07/23/96
scale AS NOTED
drawn by MC
design by VJK
checked by VJK
drawing no. 00-880
sheet 5 of 6

ANCHOR SCHEDULE

FASTENER MAXIMUM SPACING (INCHES) REQUIRED FOR VARIOUS DESIGN LOADS AND SPANS

EXISTING STRUCTURE	ANCHOR TYPE	LOAD (W) PSF MAX. (SEE NOTE 1)	MIN. 2" EDGE DISTANCE																				MIN. 3" EDGE DISTANCE																					
			SPANS UP TO 5'-8" (SEE NOTE 1)					SPANS UP TO 8'-0" (SEE NOTE 1)					SPANS UP TO 9'-0" (SEE NOTE 1)					SPANS UP TO 13'-1" (SEE NOTE 1)					SPANS UP TO 5'-8" (SEE NOTE 1)					SPANS UP TO 8'-0" (SEE NOTE 1)					SPANS UP TO 9'-0" (SEE NOTE 1)					SPANS UP TO 13'-1" (SEE NOTE 1)				
			CONNECTION TYPE					CONNECTION TYPE					CONNECTION TYPE					CONNECTION TYPE					CONNECTION TYPE					CONNECTION TYPE					CONNECTION TYPE					CONNECTION TYPE				
			1	2	3	4	5	1	2	3	4	5	1	2	3	4	5	1	2	3	4	5	1	2	3	4	5	1	2	3	4	5	1	2	3	4	5	1	2	3	4	5
CONCRETE	1/4"Φ ITW TAPCON W/ 1-1/4" MIN. EMBEDMENT (MIN. 3,100 P.S.I. CONCRETE)	48.0	12	12	12	7	9	12	12	10	5	7	12	12	9	4	6	6	12	6	3	4	12	12	12	8	11	12	12	12	5	7	12	12	11	5	7	7	12	8	3	4
		62.0	12	12	11	5	7	12	12	8	3	5	9	12	7	3	4	4	11	5		3	12	12	12	6	8	12	12	10	4	6	10	12	9	4	5	4	12	7	3	4
		72.0	12	12	10	4	6	8	12	7	3	4	5	12	6	3	4	4	11	5		3	12	12	12	5	7	9	12	8	3	5	6	12	7	3	4	4	12	7	3	4
		92.0	11	12	7	3	5	4	11	5		3	4	11	5		3	4	11	5		3	12	12	9	4	5	4	12	7	3	4	4	12	7	3	4	4	12	7	3	4
		210.0	4	11	5		3	4	11	5		3	4	11	5		3	4	11	5		3	4	12	7	3	4	4	12	7	3	4	4	12	7	3	4	4	12	7	3	4
	* 1/4"Φ ELCO MALE/ FEMALE "PANELMATE" W/ 1-1/4 MIN. EMBEDMENT & 1/4-20 MACHINE SCREW WITH NUT (MIN. 3,000 P.S.I. CONCRETE)	48.0	12	12	11	5	7	12	12	8	3	5	12	12	7	3	5	5	10	4		3	12	12	12	6	8	12	12	9	4	5	12	12	8	3	5	5	10	5		3
		62.0	12	12	8	4	6	11	12	6	3	4	7	11	5		3	3	8	4			12	12	10	4	6	12	12	7	3	4	7	11	6		4	3	9	4		3
		72.0	12	12	7	3	5	6	11	5		3	4	9	4		3	3	8	4			12	12	8	4	5	6	11	6		3	4	10	5		3	3	9	4		3
		92.0	9	12	5		4	3	8	4			3	8	4			3	8	4			9	12	6	3	4	3	9	4		3	3	9	4		3	3	9	4		3
		210.0	3	8	4			3	8	4			3	8	4			3	8	4			3	9	4		3	3	9	4		3	3	9	4		3	3	9	4		3
	* 1/4"Φ POWERS CALK-IN W/ 7/8" EMBEDMENT & 1/4-20 STAINLESS STEEL MACHINE SCREW (MIN. 3,000 P.S.I. CONCRETE)	48.0	12	12	12	9	12	12	12	11	6	11	12	12	10	6	10	10	12	7	4	7	12	12	12	12	12	12	12	12	9	12	12	12	12	8	12	12	12	11	6	8
		62.0	12	12	12	7	12	12	12	9	5	9	12	12	8	4	8	7	12	6	3	6	12	12	12	10	12	12	12	12	7	11	12	12	12	6	10	9	12	10	5	7
		72.0	12	12	11	6	11	12	12	7	4	7	9	12	7	4	6	7	12	6	3	6	12	12	12	9	12	12	12	12	6	9	12	12	11	5	8	9	12	10	5	7
		92.0	12	12	8	5	8	7	12	6	3	6	7	12	6	3	6	7	12	6	3	6	12	12	12	7	10	9	12	10	5	7	9	12	10	5	7	9	12	10	5	7
		210.0	7	12	6	3	6	7	12	6	3	6	7	12	6	3	6	7	12	6	3	6	9	12	10	5	7	9	12	10	5	7	9	12	10	5	7	9	12	10	5	7
	1/4"Φ POWERS ZAMAC NAIL-IN W/ 1-1/8" MIN. EMBEDMENT (MIN. 3,000 P.S.I. CONCRETE)	48.0	12	12	12	5	8	12	12	9	4	5	12	12	8	3	5	5	10	5		3	12	12	12	7	9	12	12	11	4	6	12	12	10	4	5	5	11	6	3	3
		62.0	12	12	10	4	6	12	12	7	3	4	7	11	6		3	3	9	4		3	12	12	12	5	7	12	12	8	3	5	8	12	7	3	4	3	10	5		3
		72.0	12	12	8	3	5	6	11	6		3	4	10	5		3	3	9	4		3	12	12	10	4	6	7	12	7	3	4	5	11	6		3	3	10	5		3
		92.0	9	12	6	3	4	3	9	4		3	3	9	4		3	3	9	4		3	10	12	8	3	4	3	10	5		3	3	10	5		3	3	10	5		3
		210.0	3	9	4		3	3	9	4		3	3	9	4		3	3	9	4		3	3	10	5		3	3	10	5		3	3	10	5		3	3	10	5		3
HOLLOW CONCRETE BLOCK	1/4"Φ ITW TAPCON W/ 1-1/4" MIN. EMBEDMENT	48.0	12	12	9	4	5	11	11	6		3	10	10	5		3	3	6	3			12	12	11	4	6	12	12	7	3	4	11	11	6		3	3	7	4		
		62.0	12	12	6	3	4	8	8	4			4	7	4				5	3			12	12	8	3	4	9	9	6		3	5	8	5				6	4		
		72.0	10	10	6		3	4	7	4			3	6	3				5	3			12	12	7	3	4	4	8	5			3	7	4				6	4		
		92.0	6	8	4				5	3				5	3				5	3			7	9	5		3		6	4				6	4				6	4		
		210.0		5	3				5	3				5	3				5	3				6	4				6	4				6	4				6	4		
	* 1/4"Φ ELCO MALE/ FEMALE "PANELMATE" W/ 1-1/4 MIN. EMBEDMENT & 1/4-20 MACHINE SCREW WITH NUT	48.0	12	12	11	5	7	12	12	8	3	5	12	12	7	3	5	5	10	4		3	12	12	12	6	8	12	12	9	4	5	12	12	8	3	5	5	10	5		3
		62.0	12	12	8	4	6	11	12	6	3	4	7	11	5		3	3	8	4			12	12	10	4	6	12	12	7	3	4	7	11	6		4	3	9	4		3
		72.0	12	12	7	3	5	6	11	5		3	4	9	4		3	3	8	4			12	12	8	4	5	6	11	6		3	4	10	5		3	3	9	4		3
		92.0	9	12	5		4	3	8	4			3	8	4			3	8	4			9	12	6	3	4	3	9	4		3	3	9	4		3	3	9	4		3
		210.0	3	8	4			3	8	4			3	8	4			3	8	4			3	9	4		3	3	9	4		3	3	9	4		3	3	9	4		3
	* 1/4"Φ POWERS CALK-IN W/ 7/8" EMBEDMENT & 1/4-20 STAINLESS STEEL MACHINE SCREW	48.0	12	12	9	4	6	12	12	6	3	4	12	12	6	3	4	4	8	4		3	12	12	12	6	8	12	12	10	4	6	12	12	9	4	5	5	11	6		3
		62.0	12	12	7	3	5	10	11	5		3	6	10	4		3	3	7	3			12	12	11	5	6	12	12	8	3	4	7	12	7	3	4	3	9	5		3
		72.0	12	12	6	3	4	5	9	4		3	4	8	4			3	7	3			12	12	10	4	5	7	12	7	3	4	5	10	6		3	3	9	5		3
		92.0	8	10	5		3	3	7	3			3	7	3			3	7	3			10	12	7	3	4	3	9	5		3	3	9	5		3	3	9	5		3
		210.0	3	7	3			3	7	3			3	7	3			3	7	3			3	9	5		3	3	9	5		3	3	9	5		3	3	9	5		3
	1/4"Φ POWERS ZAMAC NAIL-IN W/ 1-1/8" MIN. EMBEDMENT	48.0	12	12	9	4	5	10	10	6		3	9	9	6		3	3	6	4			12	12	11	4	5	12	12	8	3	4	10	10	7		3	3	7	4		
		62.0	11	11	7	3	4	7	8	5			4	7	4				5	3			12	12	8	3	4	8	9	6		3	5	8	5				6	4		
		72.0	10	10	6		3	4	7	4				6	4				5	3			11	11	7	3	3	4	8	5			3	7	4				6	4		
		92.0	6	8	4				5	3				5	3				5	3			6	9	6		3		6	4				6	4				6	4		
		210.0		5	3				5	3				5	3				5	3				6	4				6	4				6	4				6	4		

ANCHOR SCHEDULE

FASTENER MAXIMUM SPACING (INCHES) REQUIRED FOR VARIOUS DESIGN LOADS AND SPANS

EXISTING STRUCTURE	ANCHOR TYPE	LOAD (W) PSF MAX. (SEE NOTE 1)	MIN. 3/4" EDGE DISTANCE																																							
			SPANS UP TO 5'-8" (SEE NOTE 1)					SPANS UP TO 8'-0" (SEE NOTE 1)					SPANS UP TO 9'-0" (SEE NOTE 1)					SPANS UP TO 13'-1" (SEE NOTE 1)																						
			CONNECTION TYPE					CONNECTION TYPE					CONNECTION TYPE					CONNECTION TYPE																								
			1	2	3	4	5	1	2	3	4	5	1	2	3	4	5	1	2	3	4	5																				
WOOD	1/4"Φ WOOD LAG W/ 1-3/4" MIN. THREAD PENETRATION SHEAR PARALLEL OR PERP. TO WOOD GRAIN	48.0	12	12	11	7	12	12	12	8	5	11	12	12	7	4	10	10	12	4	3	7																				
		62.0	12	12	8	5	12	12	12	6	4	8	12	12	5	3	7	7	12	4		6																				
		72.0	12	12	7	5	10	12	12	5	3	7	9	12	4	3	6	7	12	4		6																				
		92.0	12	12	5	3	8	7	12	4		6	7	12	4		6	7	12	4		6																				
		210.0	7	12	4		6	7	12	4		6	7	12	4		6	7	12	4		6																				

ANCHOR NOTES:

1. SPANS AND LOADS SHOWN HERE ARE FOR DETERMINING ANCHOR SPACING ONLY. ALLOWABLE STORM SHUTTER SPANS FOR SPECIFIC LOADS MUST BE LIMITED TO THOSE SHOWN IN TABLE 1, SHEET 5.
2. ENTER ANCHOR SCHEDULE BASED ON THE EXISTING STRUCTURE MATERIAL, ANCHOR TYPE AND EDGE DISTANCE. SELECT DESIGN LOAD GREATER THAN OR EQUAL TO NEGATIVE DESIGN LOAD ON SHUTTER AND SELECT SPAN GREATER THAN OR EQUAL TO SHUTTER SPAN.
3. EXISTING STRUCTURE MAY BE CONCRETE, HOLLOW BLOCK OR WOOD FRAMING. REFERENCE ANCHOR SCHEDULE FOR PROPER ANCHOR TYPE BASED ON TYPE OF EXISTING STRUCTURE AND APPROPRIATE CONNECTION TYPE. SEE MOUNTING SECTION DETAILS FOR IDENTIFICATION OF CONNECTION TYPE.
4. ANCHORS SHALL BE INSTALLED IN ACCORDANCE WITH MANUFACTURERS' RECOMMENDATIONS.
5. MINIMUM EMBEDMENT AND EDGE DISTANCE EXCLUDES WALL FINISH OR STUCCO.
6. WHERE EXISTING STRUCTURE IS WOOD FRAMING, WOOD FRAMING CONDITIONS VARY. FIELD VERIFY THAT FASTENERS ARE INTO ADEQUATE WOOD FRAMING MEMBERS, NOT PLYWOOD. FASTENING TO PLYWOOD IS ACCEPTABLE ONLY FOR SIDE CLOSURE PIECES.
7. WHERE LAG SCREWS FASTEN TO NARROW FACE OF STUD FRAMING, FASTENER SHALL BE LOCATED IN CENTER OF NOMINAL 2" x 4" (MIN.) WOOD STUD. 3/4" EDGE DISTANCE IS ACCEPTABLE FOR WOOD FRAMING. WOOD STUD SHALL BE "SOUTHERN PINE" G=0.55 OR GREATER DENSITY. LAG SCREWS SHALL HAVE PHILLIPS PAN HEAD OR HEX HEAD.
8. MACHINE SCREWS SHALL HAVE MINIMUM OF 1/2" ENGAGEMENT OF THREADS IN BASE ANCHOR AND MAY HAVE EITHER A PAN HEAD, TRUSS HEAD, OR WAFER HEAD (SIDEWALK BOLT), U.O.N.
9. DESIGNATES ANCHOR CONDITIONS WHICH ARE NOT ACCEPTABLE USES.
10. * DESIGNATES ANCHORS WHICH ARE REMOVABLE BY REMOVING MACHINE SCREW, NUT OR WASHERED WINGNUT.
11. FOR BUILD-OUT MOUNT SECTION (D) ANCHOR SPACING SHALL NOT EXCEED 8-1/2" O.C.
12. FOR BUILD-OUT MOUNT SECTION (E) ANCHOR SPACING SHALL NOT EXCEED 6" O.C.

APPROVED AS COMPLYING WITH THE
SOUTH FLORIDA BUILDING CODE
DATE 01/18/2001
BY [signature]
PRODUCT CONTROL DIVISION
BUILDING CODE COMPLIANCE OFFICE
ACCEPTANCE NO. 00-1010.01

KNEZEVICH & ASSOCIATES, INC.
CONSULTING ENGINEERS • PRODUCT TESTING
1260 N. UNIVERSITY DRIVE, SUITE 180 • FORT LAUDERDALE, FL 33322
TEL: (954) 382-2800 • FAX: (954) 382-2889 • FLORIDA COA #3205
WEBSITE: WWW.KNEZEVICH.COM • E-MAIL: KA@KNEZEVICH.COM

COPYRIGHT © 2000 KNEZEVICH & ASSOCIATES, INC.

HT100 LICENSED BY HI-TECH SHUTTER GROUP, INC.

R.B.S. HT100
ACCORDION SHUTTER
R.B.S. ENTERPRISES, INC. SHUTTERS • GLASS • METALS
10122 N.W. 80TH AVENUE
HIALEAH GARDENS, FL 33016
TEL: (305) 885-0660
FAX: (305) 885-0680

revisions

no	date	by	description
1	08/08/96		NEW TEST DATA ADDED
2	10/10/96		COUNTY COMMENTS
3	11/26/97	JWK	REVISE FASTENERS
4	01/16/98	JWK	FASTENER NOTES
5	04/30/98	WK	SLAT 2/REV 2,4 DESC
6	06/10/99	VJK	CENTER MATES/FASTENERS

HTSG I.D. #1002009616 8D

V.J. KNEZEVICH
PROFESSIONAL ENGINEER
FL License No:
PE 0070983

OCT 02 2000

date 07/23/96	
scale AS NOTED	drawn by MC
design by VJK	checked by VJK

drawing no. 00-880

sheet 6 of 6

10/02/00 14:40