MIAMI-DADE COUNTY, FLORIDA
METRO-DADE FLAGLER BUILDING

BUILDING CODE COMPLIANCE OFFICE
METRO-DADE FLAGLER BUILDING
140 WEST FLAGLER STREET, SUITE 1603
MIAMI, FLORIDA 33130-1563
(305) 375-2901 FAX (305) 375-2908

CONTRACTOR LICENSING SECTION
(305) 375-2527 FAX (305) 375-2558

CONTRACTOR ENFORCEMENT DIVISION
(305) 375-2966 FAX (305) 375-2908

PRODUCT CONTROL DIVISION
(305) 375-2902 FAX (305) 372-6339

PRODUCT CONTROL NOTICE OF ACCEPTANCE

Stanley Door Systems
7300 Reames Rd.
Charlotte ,NC 28216

Your application for Notice of Acceptance (NOA) of:
Series "Sta-Tru" Single 6-8 Steel Edge Outswing Opaque Residential Insulated Steel Door-Impact
under Chapter 8 of the Code of Miami-Dade County governing the use of Alternate Materials and Types of Construction, and completely described herein, has been recommended for acceptance by the Miami-Dade County Building Code Compliance Office (BCCO) under the conditions specified herein.

This NOA shall not be valid after the expiration date stated below. BCCO reserves the right to secure this product or material at any time from a jobsite or manufacturer's plant for quality control testing. If this product or material fails to perform in the approved manner, BCCO may revoke, modify, or suspend the use of such product or material immediately. BCCO reserves the right to revoke this approval, if it is determined by BCCO that this product or material fails to meet the requirements of the South Florida Building Code.

The expense of such testing will be incurred by the manufacturer.

ACCEPTANCE NO.: 00-1010.02
EXPIRES: 01/04/2004

Raul Rodriguez
Chief Product Control Division

THIS IS THE COVERSHEET, SEE ADDITIONAL PAGES FOR SPECIFIC AND GENERAL CONDITIONS
BUILDING CODE & PRODUCT REVIEW COMMITTEE

This application for Product Approval has been reviewed by the BCCO and approved by the Building Code and Product Review Committee to be used in Miami-Dade County, Florida under the conditions set forth above.

Francisco J. Quintana, R.A.
Director
Miami-Dade County
Building Code Compliance Office

APPROVED: 01/04/2001

Stanley Door Systems

ACCEPTANCE No.: **00-1010.02**

APPROVED : JAN 0 4 2001

EXPIRES : JAN 0 4 2004

NOTICE OF ACCEPTANCE: SPECIFIC CONDITIONS

1. SCOPE

1.1 This approves a residential insulated steel door, as described in Section 2 of this Notice of Acceptance, designed to comply with the South Florida Building Code (SFBC), 1994 Edition for Miami-Dade County, for the locations where the pressure requirements, as determined by SFBC Chapter 23, do not exceed the Design Pressure Rating values indicated in the approved drawings.

2. PRODUCT DESCRIPTION

2.1 The **Series "Sta-Tru" Single 6'-8" Steel Edge Outswing Opaque Residential Insulated Steel Door** and its components shall be constructed in strict compliance with the following documents: Drawing No. **40591** titled "Stanley Outswing Opaque 3-0 x 6-8 Single Steel Edge Door" Sheets 1 thru 4 of 4, dated 8/29/00, prepared by R.W Building Consultants, Inc., bearing the Miami-Dade County Product Control approval stamp with the Notice of Acceptance number and approval date by the Miami-Dade County Product Control Division. These documents shall hereinafter be referred to as the approved drawings.

3. LIMITATIONS

3.1 This approval applies to single unit applications of single door only, as shown in approved drawings.

4. INSTALLATION

4.1 The residential insulated steel door and its components shall be installed in strict compliance with the approved drawings.

4.2 Hurricane protection system (shutters): the installation of this unit **will not require** a hurricane protection system.

5. LABELING

5.1 Each unit shall bear a permanent label with the manufacturer's name or logo, city, state and following statement: "Miami-Dade County Product Control Approved".

6. BUILDING PERMIT REQUIREMENTS

6.1 Application for building permit shall be accompanied by copies of the following:

6.1.1 This Notice of Acceptance

6.1.2 Duplicate copies of the approved drawings, as identified in Section 2 of this Notice of Acceptance, clearly marked to show the components selected for the proposed installation.

6.1.3 Any other documents required by the Building Official or the South Florida Building Code (SFBC) in order to properly evaluate the installation of this system.

Manuel Perez

Manuel Perez, P.E. Product Control Examiner
Product Control Division

Stanley Door Systems

ACCEPTANCE No.: 00-1010.02

APPROVED : JAN 0 4 2001

EXPIRES : JAN 0 4 2004

NOTICE OF ACCEPTANCE: STANDARD CONDITIONS

1. Renewal of this Acceptance (approval) shall be considered after a renewal application has been filed and the original submitted documentation, including test supporting data, engineering documents, are no older than eight (8) years.

2. Any and all approved products shall be permanently labeled with the manufacturer's name, city, state, and the following statement: "Miami-Dade County Product Control Approved", or as specifically stated in the specific conditions of this Acceptance.

3. Renewals of Acceptance will not be considered if:
   a) There has been a change in the South Florida Building Code affecting the evaluation of this product and the product is not in compliance with the code changes;
   b) The product is no longer the same product (identical) as the one originally approved;
   c) If the Acceptance holder has not complied with all the requirements of this acceptance, including the correct installation of the product;
   d) The engineer who originally prepared, signed and sealed the required documentation initially submitted is no longer practicing the engineering profession.

4. Any revision or change in the materials, use, and/or manufacture of the product or process shall automatically be cause for termination of this Acceptance, unless prior written approval has been requested (through the filing of a revision application with appropriate fee) and granted by this office.

5. Any of the following shall also be grounds for removal of this Acceptance:
   a) Unsatisfactory performance of this product or process.
   b) Misuse of this Acceptance as an endorsement of any product, for sales, advertising or any other purpose.

6. The Notice of Acceptance number preceded by the words Miami-Dade County, Florida, and followed by the expiration date may be displayed in advertising literature. If any portion of the Notice of Acceptance is displayed, then it shall be done in its entirety.

7. A copy of this Acceptance as well as approved drawings and other documents, where it applies, shall be provided to the user by the manufacturer or its distributors and shall be available for inspection at the job site at all time. The engineer need not reseal the copies.

8. Failure to comply with any section of this Acceptance shall be cause for termination and removal of Acceptance.

9. This Notice of Acceptance consists of pages 1, 2 and this last page 3.

Manuel Perez, P.E. Product Control Examiner
Product Control Division

END OF THIS ACCEPTANCE

STANLEY DOOR SYSTEMS

3-0 x 6-8 SINGLE OPAQUE OUTSWING STEEL EDGE DOOR IN A WOOD FRAME

GENERAL NOTES

1. THIS PRODUCT IS DESIGNED TO MEET THE SOUTH FLORIDA BUILDING CODE 1994 EDITION FOR MIAMI-DADE COUNTY.
2. WOOD BUCKS BY OTHERS, MUST BE ANCHORED PROPERLY TO TRANSFER LOADS TO THE STRUCTURE.
3. PRODUCT ANCHORS SHALL BE AS LISTED AND SPACED AS SHOWN ON DETAILS. ANCHOR EMBEDMENT TO BASE MATERIAL SHALL BE BEYOND WALL DRESSING OR STUCCO.
4. DESIGNED PRESSURE RATING SEE TABLE PAGE 1.

RESIDENTIAL INSULATED STEEL DOOR W/STEEL EDGE
(Common to all frame conditions)

Door Panel Construction:

Face sheets: 24 GA.(0.021")minimum thickness, Galvanized steel A-525 commercial quality - AKDQ per ASTM 620 with yield strength Fy(min.)=19,000 psi

Core design: Polyurethane foam core, with 1.7 pcf lbs. density by BASF.

Door Panel Construction: Flush or embossed type. The primeter stiles are a roll formed steel edge from .028" thk. galvanized steel. The vertical edges of the face sheet are crimped to form a mechanical lock with the hinge and latch steel edge stiles. The top and bottom edges of the face sheet are bent 90° over the steel edge top and bottom.

Frame Construction: The head and side jambs are finger jointed Ponderosa Pine measuring 4.5625" x 1.25". The head and side jambs are mortised, butted and joined using (3) 7/8" x 2" wire staples. The threshold used is an aluminum outswing bump face threshold measuring 4.625" x 1.25".

TABLE OF CONTENTS

SHEET #	DESCRIPTION
1	GENERAL NOTES, TYPICAL ELEVATION
2	VERTICAL CROSS SECTION, COMPONENTS & B.O.M.
3	HOIZONTAL CROSS SECTIONS, 1/3 & 2/3
4	ANCHORING LOCATIONS, DETAILS & DOOR MODELS

DESIGN PRESSURE RATING

UNIT TYPE	WHERE WATER INFILTRATION REQUIREMENT IS NEEDED
SINGLE	+70.0 -75.0 PSF

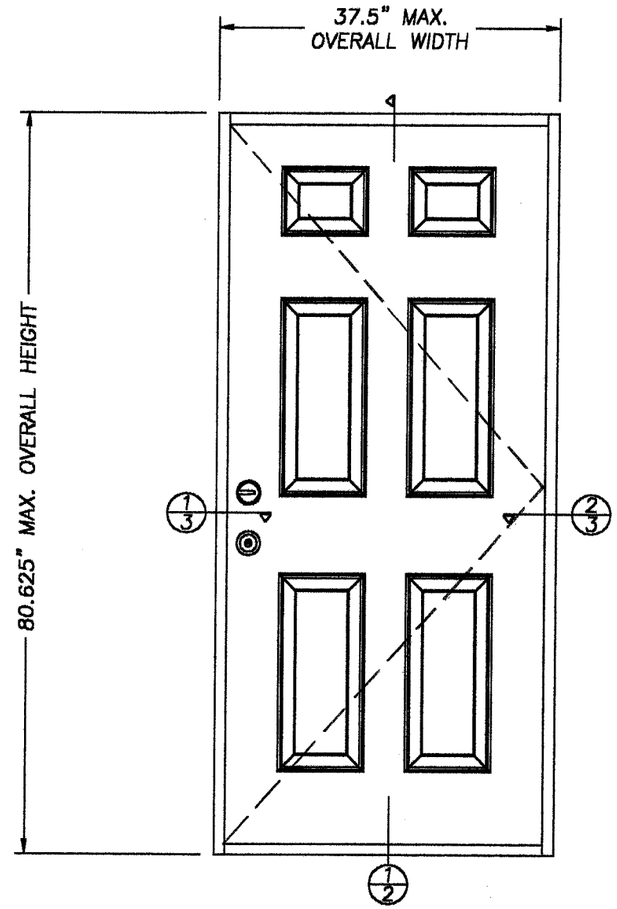

SINGLE DOOR ELEVATION
DOOR MODEL IS VIEWED
FROM THE INTERIOR SIDE

STANLEY
STANLEY DOOR SYSTEMS
7300 REAMES ROAD
CHARLOTTE, NC 28216
PH. (704) 921-3470

PRODUCT: STANLEY OUTSWING OPAQUE 3-0 x 6-8 SINGLE STEEL EDGE DOOR

PART OR ASSEMBLY: ELEVATIONS AND GERERAL NOTES

NO.	DATE	BY

REVISIONS

RW BUILDING CONSULTANTS, INC.
813.684.3831

APPROVED AS COMPLYING WITH THE SOUTH FLORIDA BUILDING CODE
DATE January 04, 2001
BY Manuel Perez
PRODUCT CONTROL DIVISION
BUILDING CODE COMPLIANCE OFFICE
ACCEPTANCE NO. 00-1010.02

DATE: 8/29/00
SCALE: N.T.S.
DWG. BY: TJH
CHK. BY: RW
DRAWING NO.: 40591
SHEET 1 OF 4

00-1010.02

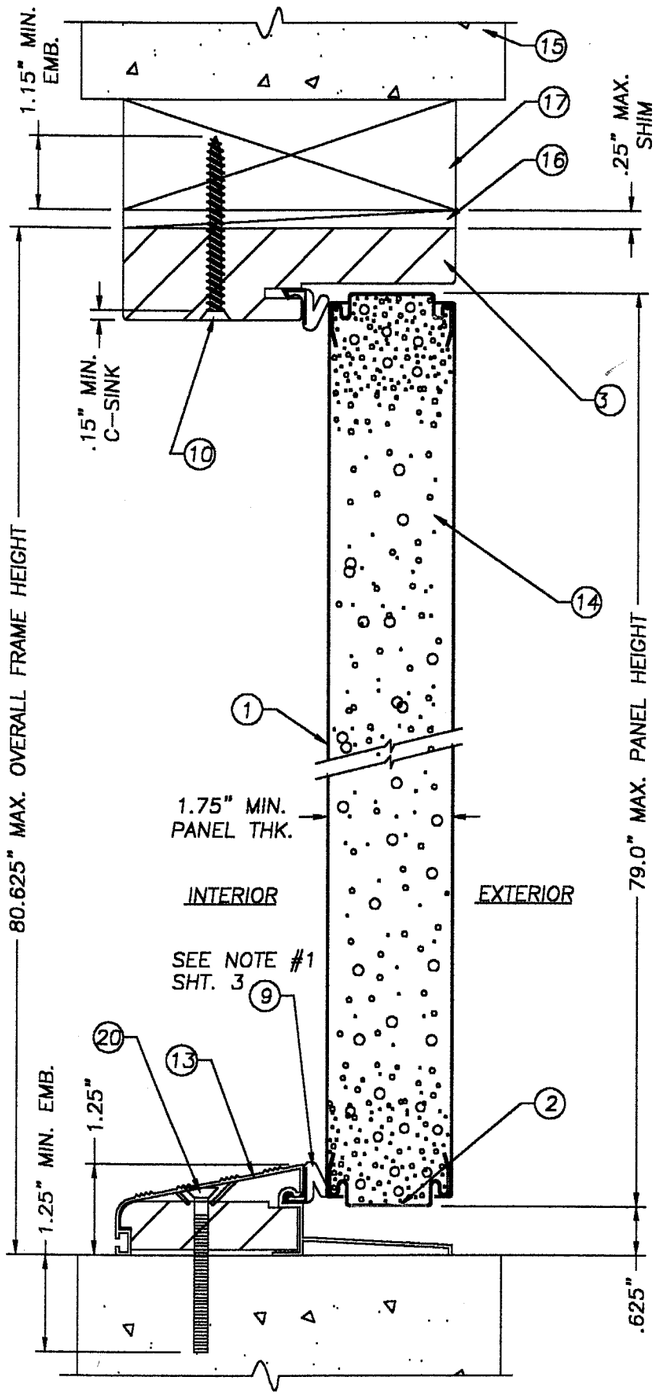

1/2 VERTICAL CROSS SECTION

ITEM	DESCRIPTION	MATERIAL
1	DOORSKIN (.021" MIN. STEEL)	STEEL
2	STEEL EDGE CAP, TOP & BOTTOM (.028" THK.)	STEEL
3	HEAD JAMB (PONDEROSA PINE)	PINE
4	HINGE JAMB (PONEROSA PINE)	PINE
5	LATCH JAMB (PONDEROSA PINE)	PINE
6	HINGES 4" X 4" X .088 WT. (STANLEY)	STEEL
7	KWIKSET 660 DEADBOLT	–
8	KWIKSET SERIES 200 DL PASSAGE	–
9	COMPRESSION WEATHERSTRIP (SCHLEGAL QDS 650) MAGNETIC WEATHERSTRIP (HOLMES)	FOAM
10	#8 x 2 1/2" PFH WS	STEEL
11	#9 x 1.00 F.H. WD SCREWS (HINGE TO JAMB)	STEEL
12	#10 x 2" PFH WOOD SCREW (HINGE TO JAMB)	STEEL
13	BUMP THRESHOLD (.045" WALL)	ALUM/WOOD
14	POLYURETHANE FOAM CORE (BASF) TYPE A. INFINITY: RESIN (P14120R) ISOCYANATY (P1001), CYCLOPENTANE. TYPE B. RETRO: RESIN (P12430R), ISOCYANATY (P1036).	
15	MASONRY	CONCRETE
16	1/4" SHIM MATERIAL	–
17	2X BUCK	WOOD
18	3/16" TAPCON (ITW) OR 3/16" (ELCO) 2 1/4" LG.	STEEL
19	CAULK, LIQUID NAIL LATEX SEALANT CAULK, SILICONE CAULK (NOVAGARD)	LATEX SILICONE
20	3/16" TAPCON (ITW) OR 3/16" (ELCO) 2 1/2" LG.	STEEL
21	STEEL EDGE CAP, HINGE STILE (.028" THK.)	STEEL
22	STEEL EDGE CAP, LATCH STILE (.028" THK.)	STEEL
23	WOOD LOCK BLOCK, DOOR PANEL 4" x 12" X 1.75"	WOOD
24	#10 x 1/2" SHEET METAL SCREW (HINGE TO DOOR)	STEEL
25	COMPRESSION WEATHERSTRIP (HOLMS, USED W/HOLMS MAGNETIC)	FOAM

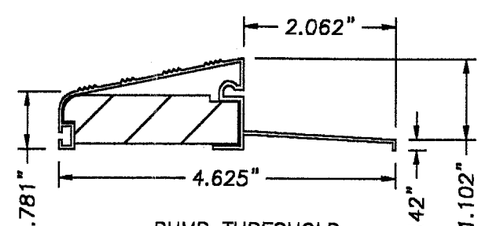

BUMP THRESHOLD
ALUMINUM & WOOD, .045" WALL

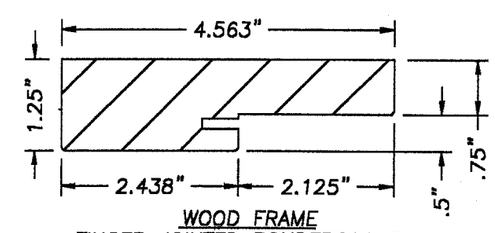

WOOD FRAME
FINGER JOINTED PONDEROSA PINE

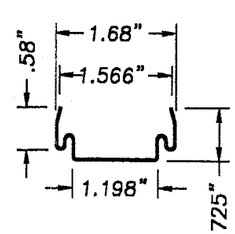

STEEL EDGE CAP
.028" THK. STEEL

APPROVED AS COMPLYING WITH THE SOUTH FLORIDA BUILDING CODE
DATE January 04, 2001
BY Manuel Suez
PRODUCT CONTROL DIVISION
BUILDING CODE COMPLIANCE OFFICE
ACCEPTANCE NO. 00-1010.02

STANLEY
STANLEY DOOR SYSTEMS
7300 REAMES ROAD
CHARLOTTE, NC 28216
PH. (704) 921-3470

PRODUCT: STANLEY OUTSWING OPAQUE 3-0 x 6-8 SINGLE STEEL EDGE DOOR

PART OR ASSEMBLY: VERTICAL CROSS SECTION COMPONENTS & B.O.M.

NO.	DATE	REVISIONS	BY

RW BUILDING CONSULTANTS, INC.
813.684.3831

DATE: 8/29/00
SCALE: 1/2" = 1"
DWG. BY: TJH
CHK. BY: RW
DRAWING NO.: 40591
SHEET 2 OF 4

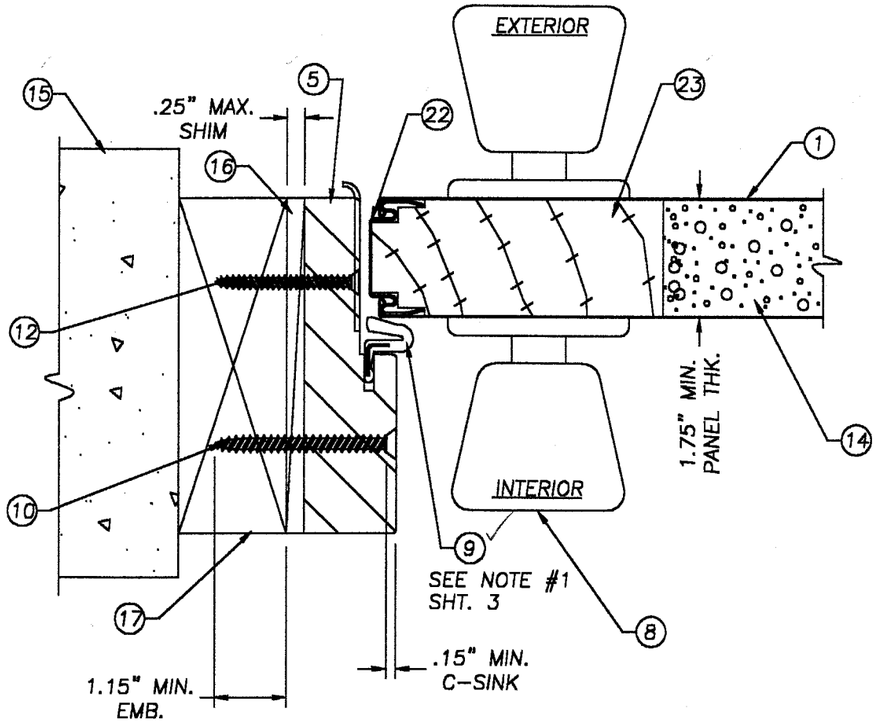

1/3 HORIZONTAL CROSS SECTION AT LACH JAMB TO BUCK, TYP.

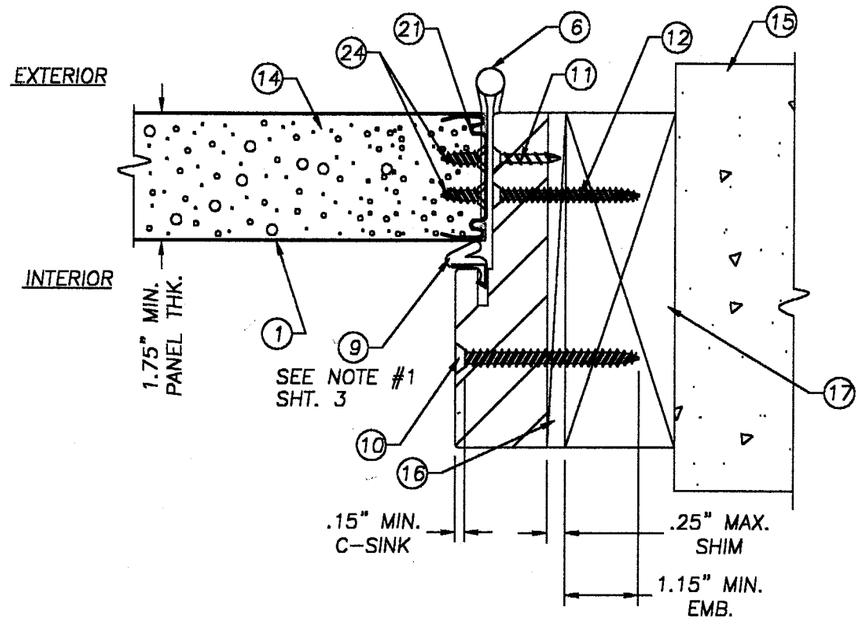

2/3 HORIZONTAL CROSS SECTION AT HINGE JAMB TO BUCK, TYP.

NOTES:
1. WHEN USING HOLMES MAGNETIC TYPE WEATHERSTRIP ON THE FRAME USE ITEM #25, HOLMES COMPRESSION TYPE WEATHERSTRIP, ON THE HINGE JAMB.
2. THE HEADER IS ATTACHED TO THE SIDE JAMBS W/(3) 7/8" x 2" WIRE STAPLES.
3. THE THRESHOLD IS ATTCHED TO THE SIDE JAMBS W/(2) 7/8" x 2" WIRE STAPLES.

APPROVED AS COMPLYING WITH THE SOUTH FLORIDA BUILDING CODE
DATE January 04, 2001
BY [signature]
PRODUCT CONTROL DIVISION
BUILDING CODE COMPLIANCE OFFICE
ACCEPTANCE NO. 00-1010.02

STANLEY
STANLEY DOOR SYSTEMS
7300 REAMES ROAD
CHARLOTTE, NC 28216
PH. (704) 921-3470

PRODUCT: STANLEY OUTSWING OPAQUE 3-0 x 6-8 SINGLE STEEL EDGE DOOR

PART OR ASSEMBLY: HORIZONTAL CROSS SECTIONS, 1/3 & 2/3

NO.	DATE	REVISIONS	BY

RW BUILDING CONSULTANTS, INC.
813.684.3831

DATE: 8/29/00
SCALE: 1/2" = 1"
DWG. BY: TJH
CHK. BY: RW
DRAWING NO.: 40591
SHEET 3 OF 4

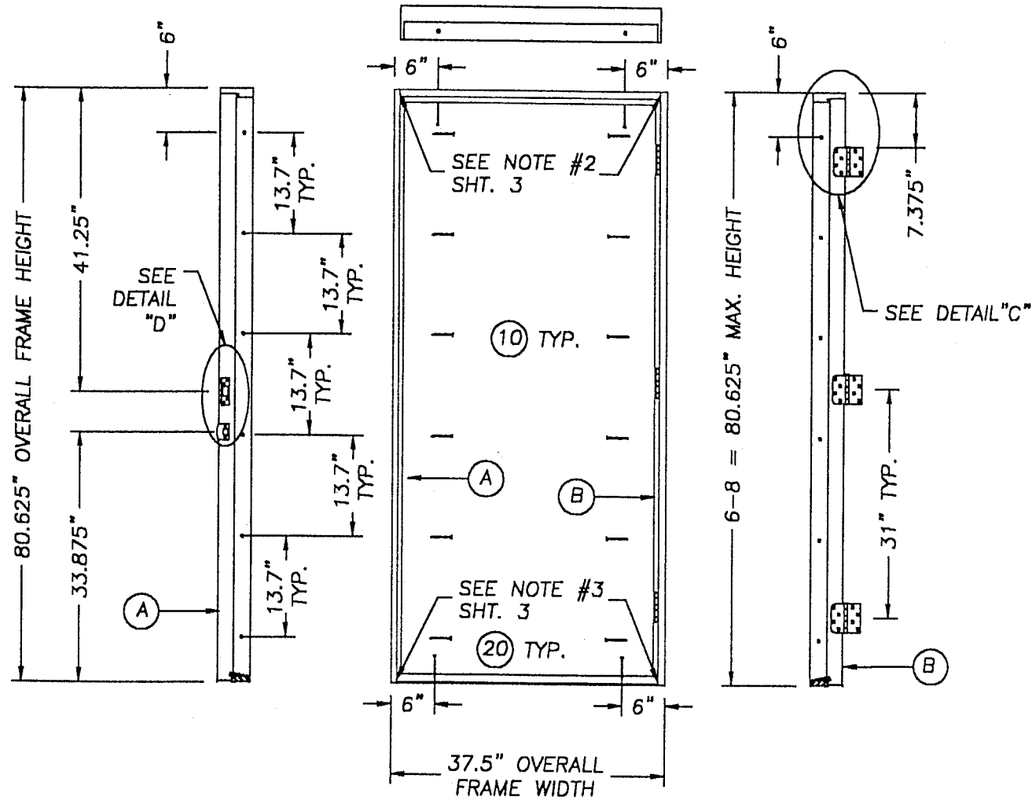

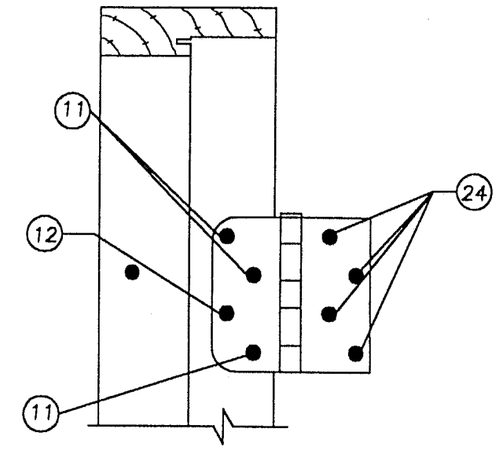

DETAIL "C"
HINGE DETAIL

NOTES:
1. ATTACH THE HEADER TO THE SIDE JAMBS W/(3) 16GA. x 2" WIRE STAPLES.
2. ATTACH THE THRESHOLD TO THE SIDE JAMBS W/(2) 16GA. x 2" WIRE STAPLES.

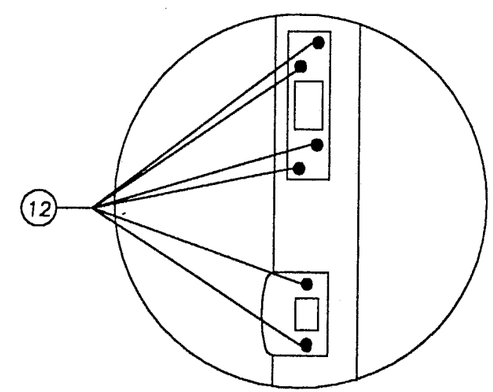

DETAIL "D"

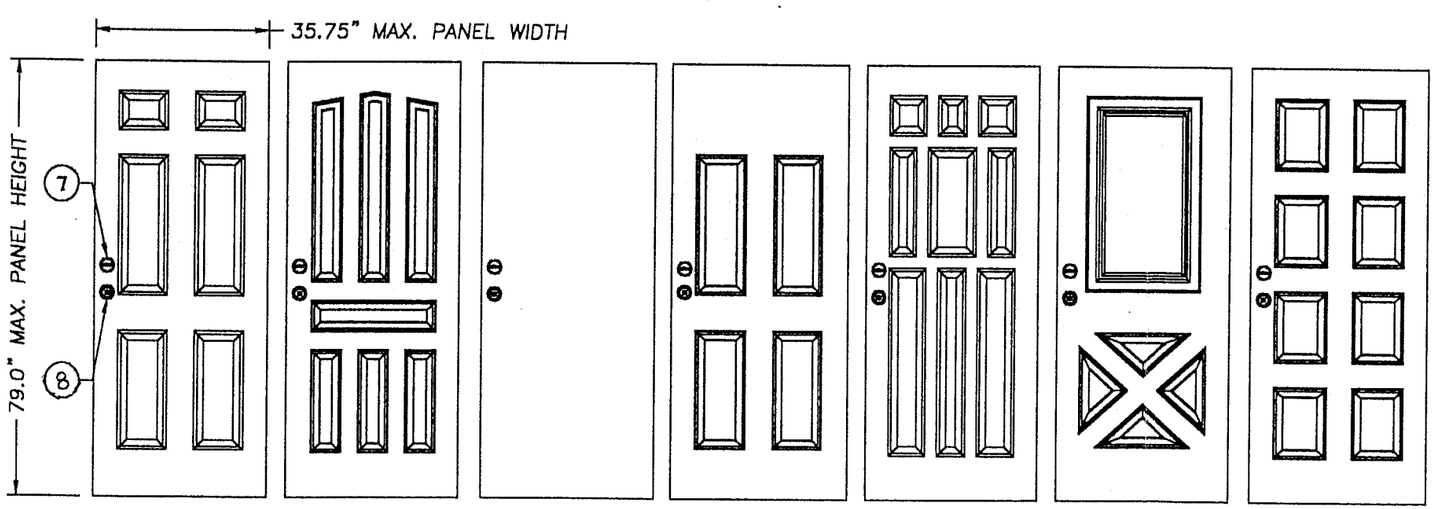

OPAQUE DOOR MODELS

STANLEY
STANLEY DOOR SYSTEMS
7300 REAMES ROAD
CHARLOTTE, NC 28216
PH. (704) 921-3470

PRODUCT: STANLEY OUTSWING OPAQUE 3-0 x 6-8 SINGLE STEEL EDGE DOOR

PART OR ASSEMBLY: ANCHORING LOCATIONS & DOOR MODELS

NO.	DATE	REVISIONS	BY

RW BUILDING CONSULTANTS, INC.
813.684.3831

APPROVED AS COMPLYING WITH THE SOUTH FLORIDA BUILDING CODE
DATE January 04, 2001
BY Manuel Perez
PRODUCT CONTROL DIVISION
BUILDING CODE COMPLIANCE OFFICE
ACCEPTANCE NO. 00-1010.02

DATE: 8/29/00
SCALE: N.T.S.
DWG. BY: TJH
CHK. BY: RW
DRAWING NO.: 40591
SHEET 4 OF 4