MIAMI-DADE

MIAMI-DADE COUNTY, FLORIDA
METRO-DADE FLAGLER BUILDING

BUILDING CODE COMPLIANCE OFFICE
METRO-DADE FLAGLER BUILDING
140 WEST FLAGLER STREET, SUITE 1603
MIAMI, FLORIDA 33130-1563
(305) 375-2901 FAX (305) 375-2908

CONTRACTOR LICENSING SECTION
(305) 375-2527 FAX (305) 375-2558

CONTRACTOR ENFORCEMENT DIVISION
(305) 375-2966 FAX (305) 375-2908

PRODUCT CONTROL DIVISION
(305) 375-2902 FAX (305) 372-6339

PRODUCT CONTROL NOTICE OF ACCEPTANCE

Andersen Corporation
100 Fourth Avenue North
Bayport ,MN 55003-1096

Your application for Notice of Acceptance (NOA) of:
Series "Springline" Wood Fixed Window - Impact Resistant
under Chapter 8 of the Code of Miami-Dade County governing the use of Alternate Materials and Types of Construction, and completely described herein, has been recommended for acceptance by the Miami-Dade County Building Code Compliance Office (BCCO) under the conditions specified herein.

This NOA shall not be valid after the expiration date stated below. BCCO reserves the right to secure this product or material at any time from a jobsite or manufacturer's plant for quality control testing. If this product or material fails to perform in the approved manner, BCCO may revoke, modify, or suspend the use of such product or material immediately. BCCO reserves the right to revoke this approval, if it is determined by BCCO that this product or material fails to meet the requirements of the South Florida Building Code.

The expense of such testing will be incurred by the manufacturer.

ACCEPTANCE NO.: 00-1011.07
EXPIRES: 10/21/2002

Raul Rodriguez
Chief Product Control Division

THIS IS THE COVERSHEET, SEE ADDITIONAL PAGES FOR SPECIFIC AND GENERAL CONDITIONS
BUILDING CODE & PRODUCT REVIEW COMMITTEE

This application for Product Approval has been reviewed by the BCCO and approved by the Building Code and Product Review Committee to be used in Miami-Dade County, Florida under the conditions set forth above.

Francisco J. Quintana, R.A.
Director
Miami-Dade County
Building Code Compliance Office

APPROVED: 02/08/2001

Andersen Corporation.

ACCEPTANCE No.: **00-1011.07**

APPROVED : FEB 0 8 2001

EXPIRES : **October 21, 2002**

NOTICE OF ACCEPTANCE: SPECIFIC CONDITIONS

1. SCOPE

1.1 This **revises** the Notice of Acceptance No. 99-0604.08, which was issued on October 21, 1999. It approves a wood fixed window as described in Section 2 of this Notice of Acceptance, designed to comply with the South Florida Building Code, (SFBC), 1994 Edition for Miami-Dade County, for the locations where the pressure requirements, as determined by SFBC Chapter 23, do not exceed the Design Pressure Rating values indicated in the approved drawings.

2. PRODUCT DESCRIPTION

2.1 The **Series "Springline" Wood Fixed Window - Impact Resistant** and its components shall be constructed in strict compliance with the following document: Drawing No. **DADE-12052,** titled "Unit Assembly, Impact Springline", Sheets 1 thru 3 of 3, dated 02/26/99, prepared by Andersen Corporation,.bearing the Miami-Dade County Product Control approval stamp with the Notice of Acceptance number and approval date by the Miami-Dade County Product Control Division. These documents shall hereinafter be referred to as the approved drawings.

3. LIMITATIONS

3.1 This approval applies to single unit applications only, as shown in approved drawings.

4. INSTALLATION

4.1 The wood fixed window and its components shall be installed in strict compliance with the approved drawings.

4.2 Hurricane protection system (shutters): the installation of this unit **will not require** a hurricane protection system.

5. LABELING

5.1 Each unit shall bear a permanent label with the manufacturer's name or logo, city, state and following statement: "Miami-Dade County Product Control Approved".

6. BUILDING PERMIT REQUIREMENTS

6.1 Application for building permit shall be accompanied by two copies of the following:

- **6.1.1** This Notice of Acceptance.
- **6.1.2** Duplicate copies of the approved drawings, as identified in section 2 of this Notice of Acceptance, clearly marked to show the components selected for the proposed installation.
- **6.1.3** Any other documents required by the Building Official or the South Florida Building Code (SFBC) in order to properly evaluate the installation of this system.

Manuel Perez, P.E., Product Control Examiner
Product Control Division

Andersen Corporation.

ACCEPTANCE No.: **00-1011.07**

APPROVED : FEB 0 8 2001

EXPIRES : **October 21, 2002**

NOTICE OF ACCEPTANCE: STANDARD CONDITIONS

1. Renewal of this Acceptance (approval) shall be considered after a renewal application has been filed and the original submitted documentation, including test supporting data, engineering documents, are no older than eight (8) years.

2. Any and all approved products shall be permanently labeled with the manufacturer's name, city, state, and the following statement: "Miami-Dade County Product Control Approved", or as specifically stated in the specific conditions of this Acceptance.

3. Renewals of Acceptance will not be considered if:
   a) There has been a change in the South Florida Building Code affecting the evaluation of this product and the product is not in compliance with the code changes;
   b) The product is no longer the same product (identical) as the one originally approved.
   c) If the Acceptance holder has not complied with all the requirements of this acceptance, including the correct installation of the product;
   d) The engineer who originally prepared, signed and sealed the required documentation initially submitted, is no longer practicing the engineering profession.

4. Any revision or change in the materials, use, and/or manufacture of the product or process shall automatically be cause for termination of this Acceptance, unless prior written approval has been requested (through the filing of a revision application with appropriate fee) and granted by this office.

5. Any of the following shall also be grounds for removal of this Acceptance:
   a) Unsatisfactory performance of this product or process;
   b) Misuse of this Acceptance as an endorsement of any product, for sales, advertising or any other purpose.

6. The Notice of Acceptance number preceded by the words Dade County, Florida, and followed by the expiration date may be displayed in advertising literature. If any portion of the Notice of Acceptance is displayed, then it shall be done in its entirety.

7. A copy of this Acceptance as well as approved drawings and other documents, where it applies, shall be provided to the user by the manufacturer or its distributors and shall be available for inspection at the job site at all times. The engineer does not need to reseal the copies.

8. Failure to comply with any section of this Acceptance shall be cause for termination and removal of Acceptance.

9. This Acceptance contains pages 1, 2, this last page 3.

END OF THIS ACCEPTANCE

Manuel Perez

Manuel Perez, P.E., Product Control Examiner
Product Control Division

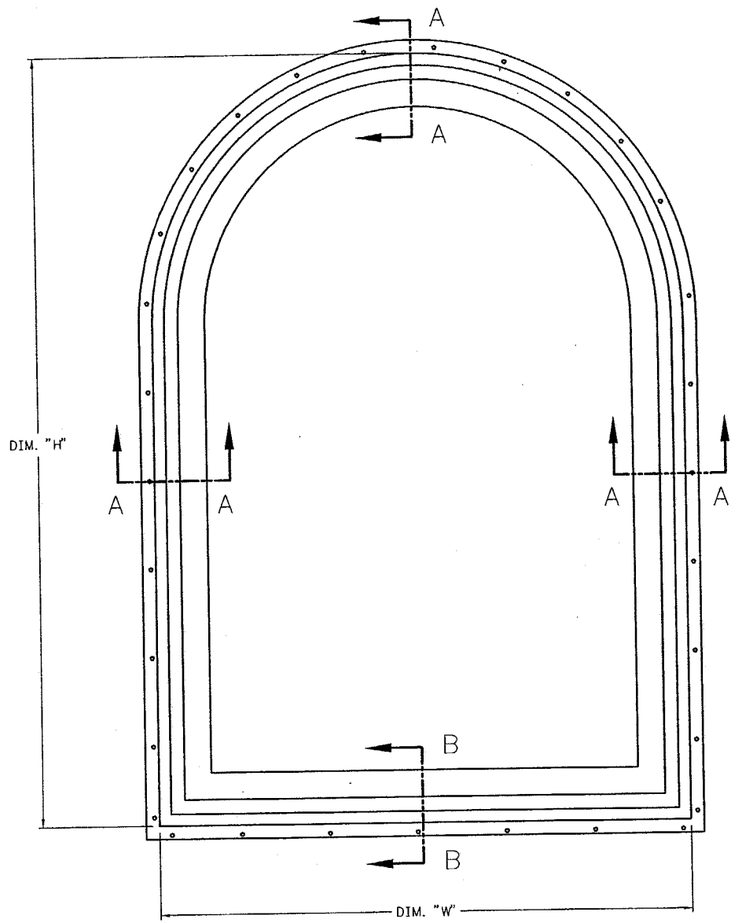

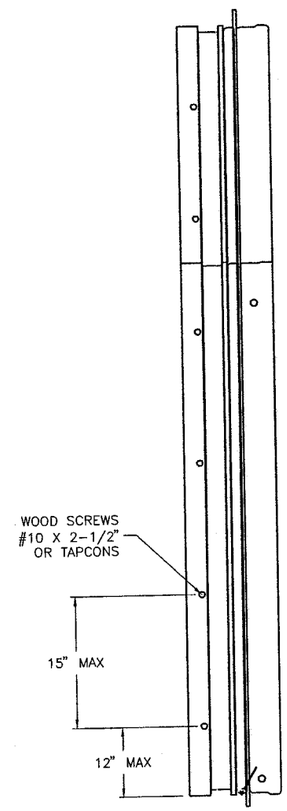

FRAME FASTENERS LIST		
A/R	CLIP, INSTALL KIT 3" X #10 WOOD SCREWS	SECURES UNIT TO OPENING
BEAD	BED GLAZ. & BACK GLAZ.	SEALS GLASS TO FRAME
BEAD	SLICONE SEALANT	SEALS MITERED JAMB CORNERS
BEAD	SILICONE SEALANT	FILLET BEAD GLASS TO FRAME COVER
A/R	NAILS, 1-1/2" X 16 GA 8" O.C	FASTENS GLASS STOPS TO FRAME
4	STAPLES, 3/8" X 1/2"	FASTENS ARCH FRAME COVER TO FRAME
BEAD	GLUE	FASTENS SILL FRAME COVERS TO FRAME
4	(2) SCREWS, #8 X 5/8"/CORNER	FASTENS CORNERLOCKS TO FRAME
12	#6 X 2" SCREW	FASTENS FRAME CORNERS
QTY.	DESCRIPTION	LOCATION

ANDERSEN MANUFACTURES CUSTOM SPRINGLINE SIZES AND SHAPES UP TO A MAX OF 30 SQ.FT. TO DETERMINE THE SQUARE FOOTAGE USE DIM."W" X DIM."H".

THE SPRINGLINE (SE & SP & ELF) PRODUCT ALSO INCLUDES THE SHAPES ON PAGE TWO.

NOTES:

1. INSTALLATION METHODS:
   WOOD BUCK: UNIT IS SECURED WITH #10 X 3" SCREWS WITH A MINIMUM OF ONE FASTNER PER SIDE. AND A MAXIMUM SPACING OF 12" FROM EACH CORNER AND 15" BETWEEN FASTNERS ON CENTER. SCREWS ARE PLACED THROUGH JAMB INTO OPENING. THE PROVIDED SPACING REQUIREMENTS ASSURE ADEQUATE INSTALLATION FOR MAXIMUM DP PERFORMANCE.

   MASONARY: TAPCON SPACING AND LOCATION TO BE THE SAME AS WOOD SCREW SPACING AND LOCATION.

2. STRUCTURAL DESIGN PRESSURE RATINS FOR UP TO 30 Sq.Ft. UNIT SIZE = +67/-71 PSF. AREA OF WINDOW CANNOT EXCEED 30 SF.

3. GLAZING SPECIFICATIONS:
   HEAT STRENGTHTNED: THE UNITS UTILIZE 3/8" (.391") THICK LAMINATED GLASS FABRICATED & COMPOSED OF TWO NOMINAL 5/32" HEAT-STRENGTHENED SHEETS AND A .090" GRAY OR CLEAR INNER LAYER BY SOLUTIA OR DUPONT.

   ANNEALED: THE UNITS UTILIZE 17/32" (.532") THICK LAMINATED GLASS FABRICATED & COMPOSED OF TWO NOMINAL 7/32" ANNEALED SHEETS AND A .090" GRAY OR CLEAR INNER LAYER BY SOLUTIA OR DUPONT.

   GLAZING METHOD: GLASS IS SET FROM THE INTERIOR AGAINST THE SILICONE BED GLAZING AND BACK GLAZING WITH SILICONE UP TO TOP FULL THICKNESS OF GLASS. WOOD STOPS ARE POSITIONED AT THE INTERIOR & SECURED WITH 1-1/2" LONG 15 GA. NAILS SPACED 8" O.C. A SILICONE FILLET BEAD IS APPLIED ON THE EXTERIOR FULL PERIMETER OF UNIT. SILICONE IS BY DOW CORNING DC983-2.

4. FRAME CONSTRUCTION:
   FRAME MEMBERS CONSIST OF MOLDED PINE. THE ARCH PARTS ARE LAMINATED POPAL AND MAPLE, ALL JAMBS, SILLS & ARCH PARTS ARE ALUMINUM CLADDING THAT IS STAPPLED & GLUED TO THE WOOD FRAME MEMBERS. THE FRAME CORNERS ARE MITERED, SEALED WITH SILICONE & SECURED THROUGH THE WOOD WITH THREE 2" LONG FLATHEAD SCREWS PER CORNER. INJECTION MOLDED PLATIC CORNER KEYS ARE POSITIONED AT EACH CORNER, SECURING THE EXTERIOR CLADDING. THE LOWER FRAME CORNER KEYS ARE ONE PIECE NON-ADJUSTING. TWO 5/8" STAINLESS SCREWS PER CORNER SECURE THE CLADDING & THE CORNER KEYS.

5. GLASS BITE = .750".

6. SPACING OF CLIPS IS BASED ON A MAXIMUM ALLOWABLE LOAD OF 149 lbs FOR #10 X 2-1/2" WOOD SCREWS ON S.Y.P. WITH A MINIMUM PENETRATION OF 1.330".

APPROVED AS COMPLYING WITH THE
SOUTH FLORIDA BUILDING CODE
DATE February 28, 2001
BY Manuel Perez
PRODUCT CONTROL DIVISION
BUILDING CODE COMPLIANCE OFFICE
ACCEPTANCE NO. 00-1011.07

TITLE
UNIT ASSEMBLY, IMPACT
SPRINGLINE

Andersen Corporation
Bayport, Minnesota 55003

THESE DRAWINGS ARE PROVIDED AS A SERVICE BY ANDERSEN CORPORATION FOR THE BENEFIT OF ITS CUSTOMERS. FINAL RESPONSIBILITY FOR ACCURACY OF DESIGN, FINAL SPECIFICATIONS, DRAWINGS AND FOR THE ACTUAL INSTALLATION SUGGESTED BY THESE DRAWINGS LIES WITH THE ARCHITECT, ENGINEER AND/OR CONTRACTOR.

COPYRIGHT ANDERSEN CORPORATION 1998. ALL RIGHTS RESERVED.

APPROVE/DATE 2-26-99

DRAWING NUMBER DADE-12052

SHT. 1 OF 3

00-1011.07

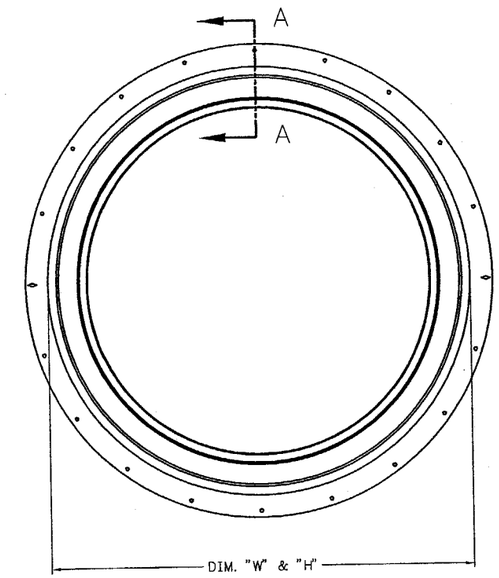

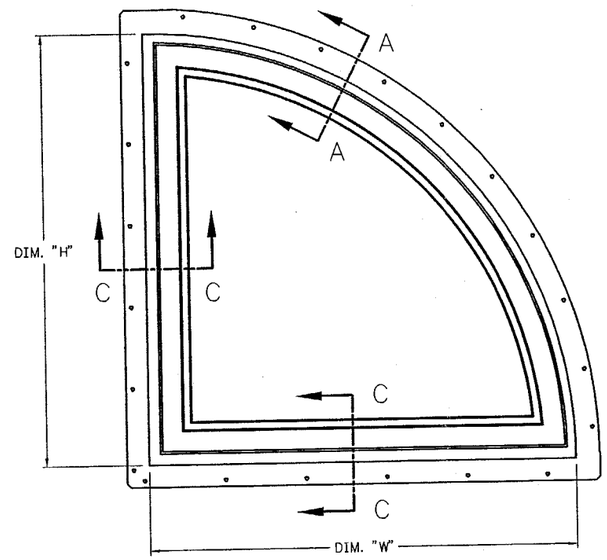

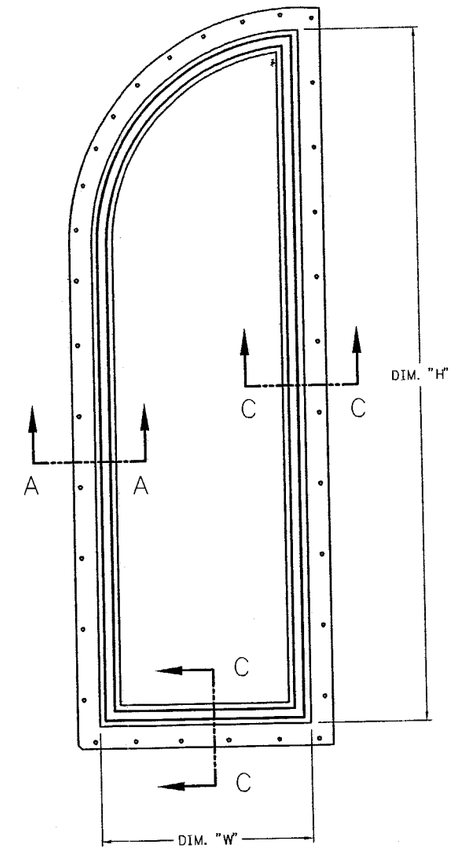

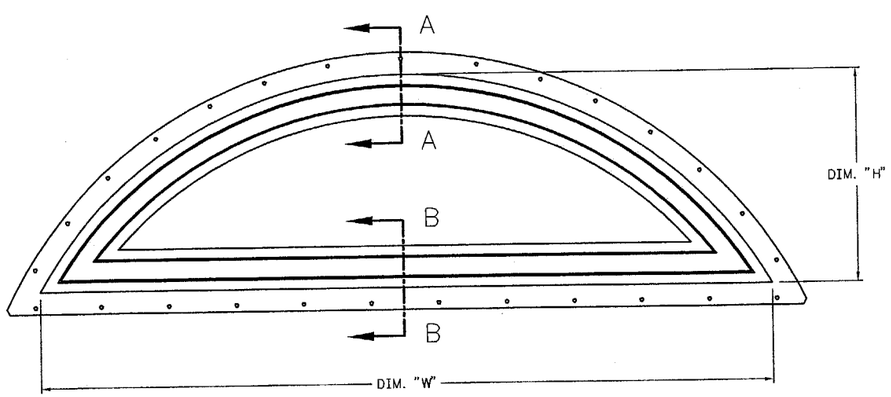

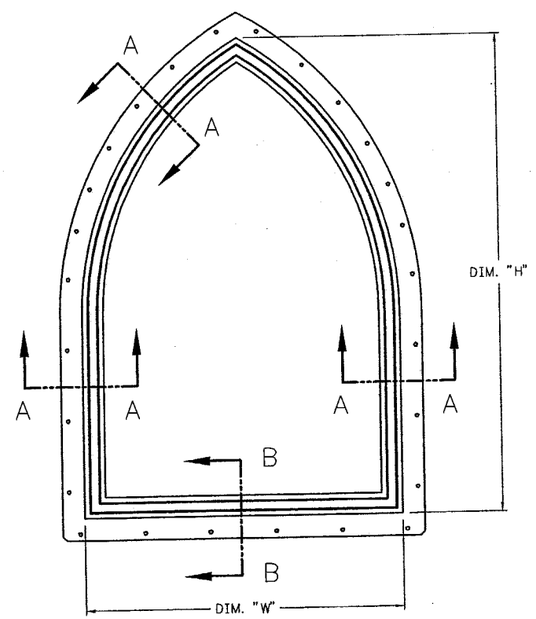

APPROVED AS COMPLYING WITH THE
SOUTH FLORIDA BUILDING CODE
DATE February 08, 2001
BY Manuel Suarez
PRODUCT CONTROL DIVISION
BUILDING CODE COMPLIANCE OFFICE
ACCEPTANCE NO. 00-1011.07

TITLE
UNIT ASSEMBLY, IMPACT
SPRINGLINE

Andersen Corporation
Bayport, Minnesota 55003

THESE DRAWINGS ARE PROVIDED AS A SERVICE BY ANDERSEN CORPORATION FOR THE BENEFIT OF ITS CUSTOMERS. FINAL RESPONSIBILITY FOR ACCURACY OF DESIGN, FINAL SPECIFICATIONS, DRAWINGS AND FOR THE ACTUAL INSTALLATION SUGGESTED BY THESE DRAWINGS LIES WITH THE ARCHITECT, ENGINEER AND/OR CONTRACTOR.

COPYRIGHT ANDERSEN CORPORATION 1998. ALL RIGHTS RESERVED.

APPROVE/DATE 2-26-99

DRAWING NUMBER DADE-12052

SHT. 2 OF 3

ITEM NO.	DESCRIPTION	DRAWING	MATERIAL	HEIGHT	WIDTH
20	1/4" DIAMETER TAPCON	–	STEEL	–	–
19	COVER, JAMB/SILL	3621330	PULTRUDED	2.390	3.145
18	JAMB, SILL	11023	WOOD	1.381	2.500
17	WOOD SCREW, #10 X 3"	3621330	STEEL	–	–
16	FLANGE, SIDE & SILL	24136	VINYL	1.644	0.430
15	FLANGE, HEAD	11080	VINYL	1.644	0.430
14	CORNERLOCK – 90°	11029	PLASTIC	1.750	1.750
13	SCREW, #8 X 5/8"	3621000	STAINLESS STEEL	–	–
12	SEALANT, SILICONE FILLET	MDS0034	SILICONE	–	–
11	SPACER, GLASS LATERAL	11084	FOAM	0.125	0.250
10	SEALANT, SILICONE	MDS0012	SILICONE	–	–
9	JAMB, SILL	11023	WOOD	1.381	2.500
8	STOP, SILL & SIDE GLASS	12015	WOOD	1.000	0.719
7	GLASS, LAMINATED	SEE NOTE 7	–	–	–
6	NAIL, 1-1/2" X 16 GA.	4220149	STEEL	–	–
5	SPACER, GLASS	20065	VINYL	1.000	0.425
4	STAPLE, 3/8" X 1/2"	4220180	STEEL	–	–
3	STOP, HEAD ARCH GLASS	12013	WOOD	1.000	0.719
2	JAMB, HEAD ARCH	29013	WOOD	1.391	2.531
1	COVER, HEAD ALUMINUM ARCH	12001	ALUMINUM	2.359	1.859

DRAWING REFERANCE LIST

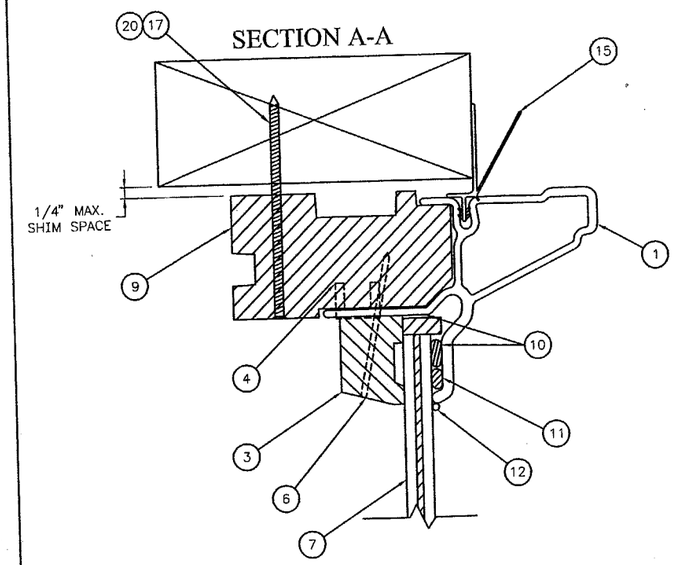

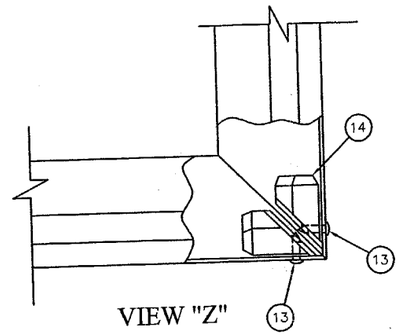

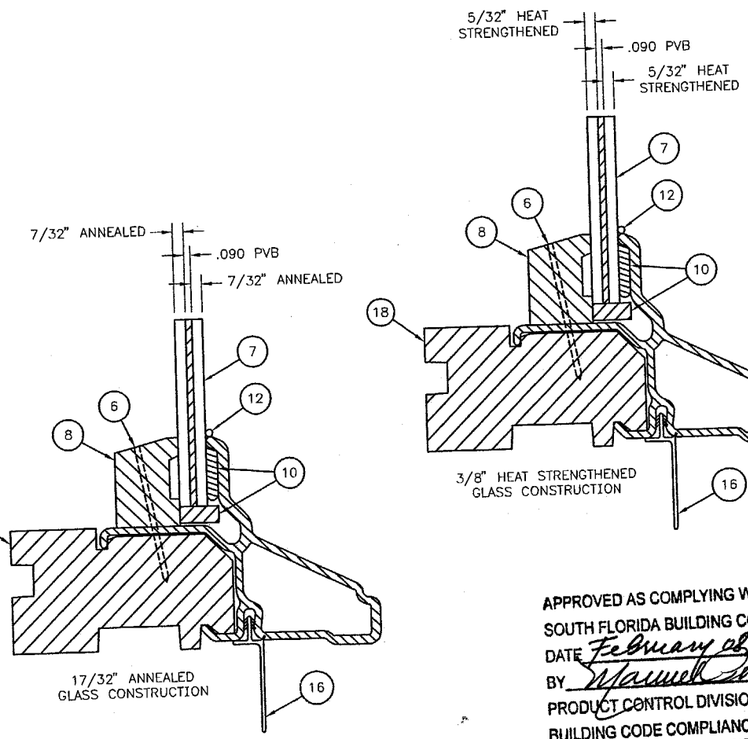

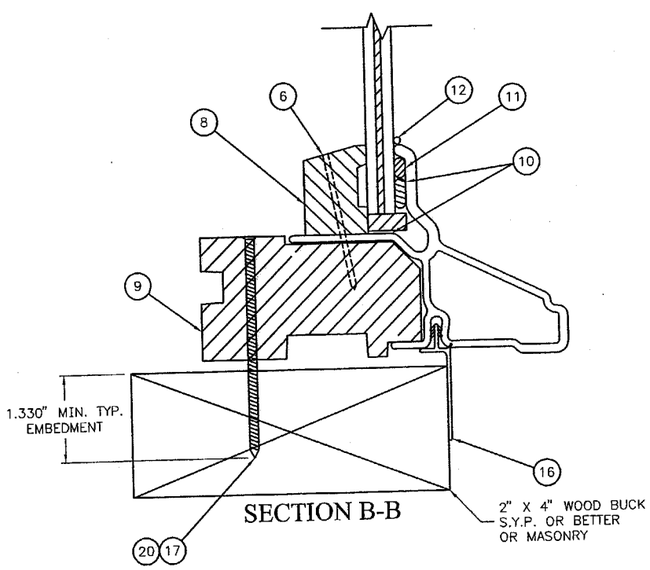

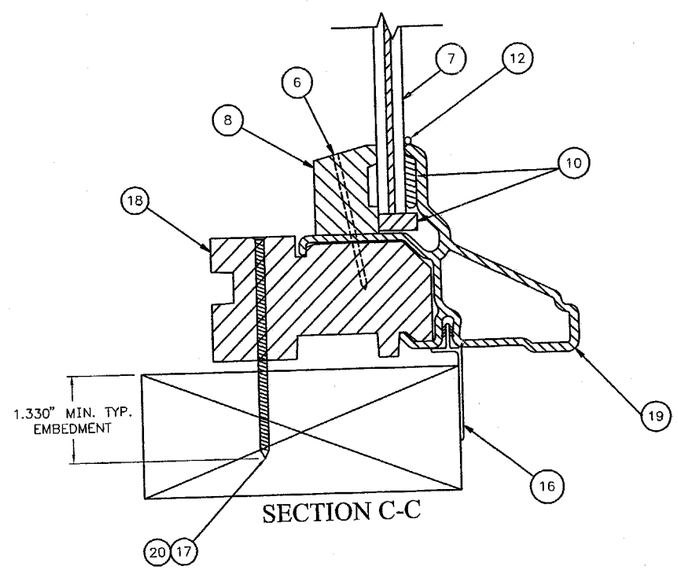

APPROVED AS COMPLYING WITH THE SOUTH FLORIDA BUILDING CODE
DATE February 08, 2001
BY Manuel Sierra
PRODUCT CONTROL DIVISION
BUILDING CODE COMPLIANCE OFFICE
ACCEPTANCE NO. 00-1011.07

TITLE
UNIT ASSEMBLY, IMPACT SPRINGLINE

Andersen Corporation
Bayport, Minnesota 55003

THESE DRAWINGS ARE PROVIDED AS A SERVICE BY ANDERSEN CORPORATION FOR THE BENEFIT OF ITS CUSTOMERS. FINAL RESPONSIBILITY FOR ACCURACY OF DESIGN, FINAL SPECIFICATIONS, DRAWINGS AND FOR THE ACTUAL INSTALLATION SUGGESTED BY THESE DRAWINGS LIES WITH THE ARCHITECT, ENGINEER AND/OR CONTRACTOR.

COPYRIGHT ANDERSEN CORPORATION 1998. ALL RIGHTS RESERVED.

APPROVE/DATE 2-26-99

DRAWING NUMBER DADE-12052

SHT. 3 OF 3

7. DRAWING NUMBERS FOR GLASS: 04176, 04177, 04180, 04181, 04184-04191.