MIAMI-DADE

MIAMI-DADE COUNTY, FLORIDA
METRO-DADE FLAGLER BUILDING

BUILDING CODE COMPLIANCE OFFICE
METRO-DADE FLAGLER BUILDING
140 WEST FLAGLER STREET, SUITE 1603
MIAMI, FLORIDA 33130-1563
(305) 375-2901 FAX (305) 375-2908

CONTRACTOR LICENSING SECTION
(305) 375-2527 FAX (305) 375-2558

CONTRACTOR ENFORCEMENT DIVISION
(305) 375-2966 FAX (305) 375-2908

PRODUCT CONTROL DIVISION
(305) 375-2902 FAX (305) 372-6339

PRODUCT CONTROL NOTICE OF ACCEPTANCE

KML Windows, Inc.
23 Buchanan Court
London ,On N5Z 4P9

Your application for Notice of Acceptance (NOA) of:
Aluminum Clad Direct Set Glazed Wood Fixed Windows - Non-Impact and Impact Resistant
under Chapter 8 of the Code of Miami-Dade County governing the use of Alternate Materials and Types of Construction, and completely described herein, has been recommended for acceptance by the Miami-Dade County Building Code Compliance Office (BCCO) under the conditions specified herein.

This NOA shall not be valid after the expiration date stated below. BCCO reserves the right to secure this product or material at any time from a jobsite or manufacturer's plant for quality control testing. If this product or material fails to perform in the approved manner, BCCO may revoke, modify, or suspend the use of such product or material immediately. BCCO reserves the right to revoke this approval, if it is determined by BCCO that this product or material fails to meet the requirements of the South Florida Building Code.

The expense of such testing will be incurred by the manufacturer.

ACCEPTANCE NO.: 00-1030.04
EXPIRES: 04/19/2004

Raul Rodriguez
Chief Product Control Division

THIS IS THE COVERSHEET, SEE ADDITIONAL PAGES FOR SPECIFIC AND GENERAL CONDITIONS
BUILDING CODE & PRODUCT REVIEW COMMITTEE

This application for Product Approval has been reviewed by the BCCO and approved by the Building Code and Product Review Committee to be used in Miami-Dade County, Florida under the conditions set forth above.

Francisco J. Quintana, R.A.
Director
Miami-Dade County
Building Code Compliance Office

APPROVED: 04/19/2001

KML Windows, Inc

ACCEPTANCE No.: 00-1030.04

APPROVED : APR 19 2001

EXPIRES : APR 19 2004

NOTICE OF ACCEPTANCE SPECIFIC CONDITIONS

1. SCOPE

1.1 This approves a wood fixed window as described in Section 2 of this Notice of Acceptance, designed to comply with the South Florida Building Code (SFBC), 1994 Edition for Miami-Dade County, for the locations where the pressure requirements, as determined by SFBC Chapter 23, do not exceed the Design Pressure Rating values indicated in the approved drawings.

2. PRODUCT DESCRIPTION

2.1 The **Aluminum Clad Direct Set Glazed Wood Fixed Window – Non-Impact and Impact Resistant** and its components shall be constructed in strict compliance with the following document: Drawing No. **1003A,** Sheets 1 thru 7 of 7, titled "Aluminum Clad Wood Direct Glazed Fixed Windows (Dade)", dated 08/28/00, prepared by W.W. Schaefer Engineering & Consulting, P.A, signed and sealed by Warren W. Schaefer, P.E., bearing the Miami-Dade County Product Control approval stamp with the Notice of Acceptance number and approval date by the Miami-Dade County Product Control Division. These documents shall hereinafter be referred to as the approved drawings.

3. LIMITATIONS

3.1 This approval applies to single unit applications only, as shown in approved drawings.

4. INSTALLATION

4.1 The wood fixed window and its components shall be installed in strict compliance with the approved drawings.

4.2 Hurricane protection system (shutters): to determine whether the installation requires a hurricane protection system or not, see corresponding table in approved drawing.

5. LABELING

5.1 Each unit shall bear a permanent label with the manufacturer's name or logo, city, state and following statement: "Miami-Dade County Product Control Approved".

6. BUILDING PERMIT REQUIREMENTS

6.1 Application for building permit shall be accompanied by two copies of the following:

- **6.1.1** This Notice of Acceptance.
- **6.1.2** Duplicate copies of the approved drawings, as identified in section 2 of this Notice of Acceptance, clearly marked to show the components selected for the proposed installation.
- **6.1.3** Any other documents required by the Building Official or the South Florida Building Code (SFBC) in order to properly evaluate the installation of this system.

Manuel Perez

Manuel Perez, P.E., Product Control Examiner
Product Control Division

KML Windows, Inc

ACCEPTANCE No.: 00-1030.04

APPROVED : APR 19 2001

EXPIRES : APR 19 2004

NOTICE OF ACCEPTANCE: STANDARD CONDITIONS

1. Renewal of this Acceptance (approval) shall be considered after a renewal application has been filed and the original submitted documentation, including test supporting data, engineering documents, are no older than eight (8) years.

2. Any and all approved products shall be permanently labeled with the manufacturer's name, city, state, and the following statement: "Miami-Dade County Product Control Approved", or as specifically stated in the specific conditions of this Acceptance.

3. Renewals of Acceptance will not be considered if:
   a) There has been a change in the South Florida Building Code affecting the evaluation of this product and the product is not in compliance with the code changes;
   b) The product is no longer the same product (identical) as the one originally approved.
   c) If the Acceptance holder has not complied with all the requirements of this acceptance, including the correct installation of the product;
   d) The engineer who originally prepared, signed and sealed the required documentation initially submitted , is no longer practicing the engineering profession.

4. Any revision or change in the materials, use, and/or manufacture of the product or process shall automatically be cause for termination of this Acceptance, unless prior written approval has been requested (through the filing of a revision application with appropriate fee) and granted by this office.

5. Any of the following shall also be grounds for removal of this Acceptance:
   a) Unsatisfactory performance of this product or process;
   b) Misuse of this Acceptance as an endorsement of any product, for sales, advertising or any other purpose.

6. The Notice of Acceptance number preceded by the words Dade County, Florida, and followed by the expiration date may be displayed in advertising literature. If any portion of the Notice of Acceptance is displayed, then it shall be done in its entirety.

7. A copy of this Acceptance as well as approved drawings and other documents, where it applies, shall be provided to the user by the manufacturer or its distributors and shall be available for inspection at the job site at all times. The engineer does not need to reseal the copies.

8. Failure to comply with any section of this Acceptance shall be cause for termination and removal of Acceptance.

9. This Acceptance contains pages 1, 2, this last page 3.

Manuel Perez, P.E. Product Control Examiner
Product Control Division

END OF THIS ACCEPTANCE

KML Windows, Inc

ACCEPTANCE No.: **00-1030.04**

APPROVED : APR 19 2001

EXPIRES : APR 19 2004

NOTICE OF ACCEPTANCE: EVIDENCE SUBMITTED

A. DRAWING:

1. Manufacturer's die drawings and sections.
2. Drawing No. **1003A,** titled "Aluminum Clad Wood Direct Glazed Fixed Windows (Dade)", Sheets 1 thru 7 of 7, dated 08/28/00, prepared by W.W. Schaefer Engineering & Consulting, P.A, signed and sealed by Warren W. Schaefer, P.E.

B. TESTS:

1. Test reports on 1) Air Infiltration Test, per PA 202-94
   2) Uniform Static Air Pressure Test, Loading per PA 202-94.
   3) Water Resistance Test, per PA 202-94.
   4) Large Missile Impact Test per SFBC, PA 201-94
   5) Cyclic Wind Pressure Loading per SFBC, PA 203-94

   along with installation diagram of direct set wood fixed windows of different shapes, prepared by Intertek Testing Services NA Inc., Test Report No. **J99022770-231-01**, dated October 9, 2000, signed and sealed by Douglas Keith Tucker, P.E
2. Test reports on 1) Air Infiltration Test, per PA 202-94
   2) Uniform Static Air Pressure Test, Loading per PA 202-94.
   3) Water Resistance Test, per PA 202-94.

   along with installation diagram of direct set wood fixed windows of different shapes, prepared by Intertek Testing Services NA Inc., Test Report No. **J99022770-231-02**, dated October 10, 2000, signed and sealed by Douglas Keith Tucker, P.E
   Addendum letter dated March 20, 2001, signed and sealed by Douglas Keith Tucker, P.E

C. CALCULATIONS:

1. Engineering Calculations prepared by W.W. Schaefer Engineering & Consulting, P.A, dated 8/28/00, sheets 1 thru 9 of 9, signed and sealed by Warren W. Schaefer, P.E.

D. MATERIAL CERTIFICATIONS:

1. Notice of Acceptance No. **97-0527.04** issued to Nebula Glass International Inc. for "Glasslam Safety-Plus Laminated Glass" dated 09/09/97, expiring on 09/09/2000.

E. STATEMENTS:

1. Statement letter of Compliance, issued by W.W. Schaefer Engineering & Consulting, P.A., dated October 19, 2000, signed and sealed by Warren W. Schaefer, P.E.
2. Statement letter of "No Financial Interest" issued by W.W. Schaefer Engineering & Consulting, P.A, dated October 19, 2000, signed and sealed by Warren W. Schaefer, P.E.

F. OTHER:

1. None.

Manuel Perez, P.E., Product Control Examiner
Product Control Division

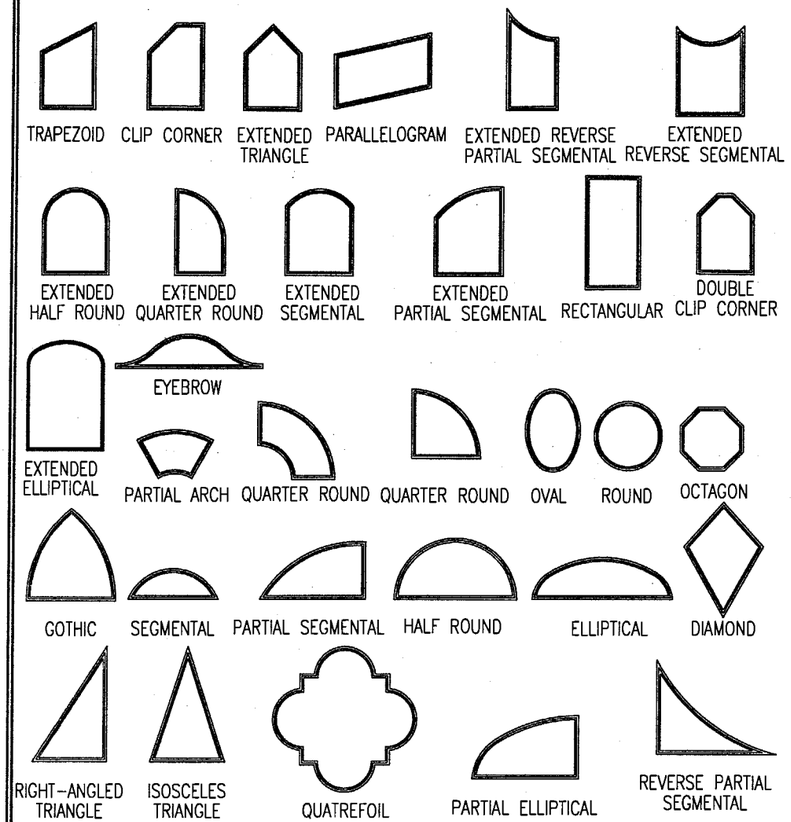

SHAPES CONSIDERED AS PART OF THIS APPROVAL FOR BOTH IMPACT & NON-IMPACT

ALL ELEVATIONS VIEWED FROM EXTERIOR

NOTE: FOR COMBINATION OF UNITS. SEE MULLION DRAWING NO. 1003E

SIZE NOTE:

FOR IMPACT WINDOWS, THE LARGER WINDOW DIMENSION MAY BE INCREASED TO AS MUCH AS 144" PROVIDING THE SMALLER DIMENSION IS DECREASED PER THE TABLE BELOW. FOR NON-IMPACT WINDOW SIZES & LOADS, SEE THE LOAD TABLES ON SHEET 6.

HEIGHT	MAX. ALLOWABLE WIDTH
126"	57"
132"	54"
138"	52"
144"	50"

ALLOWABLE DESIGN LOADS	
IMPACT UNITS	+70 PSF & -80 PSF
NON-IMPACT UNITS	SEE "NON-IMPACT LOAD TABLE" ON SHEET 6

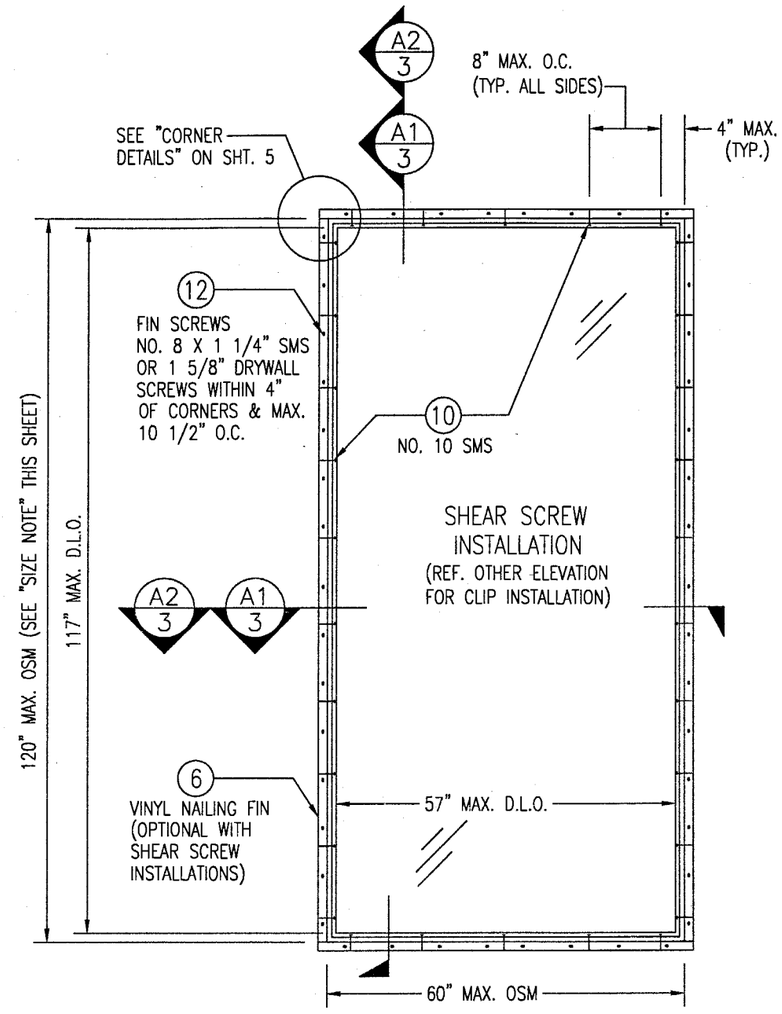

60" X 120" RECTANGLE

SCALE:1/2"=1'-0"

JAMB FASTENER MIN. EMBEDMENT INTO OPENING OR BUCK

NO. 10 SMS SCREWS INTO BUCK = 1 3/8"
1/4" TAPCON INTO CONCRETE/BLOCK = 1 1/4"

JAMB FASTENER MINIMUM EDGE DISTANCE AT OPENING OR BUCK

WOOD BUCK = 1"
CONCRETE/BLOCK = 2"

GENERAL NOTES

1. THESE WINDOW SYSTEMS HAVE BEEN TESTED, ANALYZED AND APPROVED FOR DESIGN PRESSURES NOT TO EXCEED THOSE SHOWN IN THE LOAD TABLES ON SHEET 1, 2 & 6.
2. BUCKING, OPENINGS & BUCKING FASTENERS MUST BE DESIGNED & INSTALLED TO WITHSTAND WIND LOADS AS DETERMINED FOR EA. APPLICATION
3. ALL HARDWARE & FASTENERS SHALL BE IN ACCORDANCE WITH THESE DRAWINGS & MAY NOT VARY UNLESS SPECIFICALLY MENTIONED ON THE DRAWINGS.
4. THE DETAILS & SPECIFICATIONS SHOWN HEREIN REPRESENT THE PRODUCTS PROPOSED FOR WATER, AIR, IMPACT, CYCLIC & UNIFORM STATIC AIR PRESSURE TESTING IN CONFORMANCE WITH DADE COUNTY PROTOCOLS PA 201, 202 & 203 FOR BOTH IMPACT & NON-IMPACT WINDOWS.
5. ALL JAMB TO BUCKING SHEAR FASTENERS MUST PENETRATE BUCK A MINIMUM OF 1 3/8". IF PENETRATION IS LESS THAN 1 3/8" THEN SCREW LENGTH SHALL INCREASE AS REQUIRED.
6. THESE WINDOW SYSTEMS HAVE BEEN DESIGNED IN ACCORDANCE WITH THE SOUTH FLORIDA BUILDING CODE, 1994 EDITION.
7. THIS PRODUCT HAS BEEN TESTED IN ACCORDANCE WITH DADE COUNTY PROTOCOLS PA-201, PA-202 & PA-203 FOR LARGE MISSILE IMPACT, STRUCTURAL & CYCLIC TESTING.
8. THE LARGER WINDOW DIMENSION MAY BE EITHER HORIZONTAL OR VERTICAL.
9. FOR ALL NON-IMPACT WINDOWS, MIAMI-DADE COUNTY APPROVED SHUTTERS ARE REQUIRED.

APPROVED AS COMPLYING WITH THE SOUTH FLORIDA BUILDING CODE
DATE APR 19 2001
BY
PRODUCT CONTROL DIVISION
BUILDING CODE COMPLIANCE OFFICE
ACCEPTANCE NO. 00-1030.04

DRAWN BY: T.M.H.	DATE: 08/28/00
CHECKED BY: W.W.S.	DATE: 08/28/00

PLOT: 1=24

NO.	REVISION DESCRIPTION	BY	DATE

DRAWING TITLE
ALUMINUM CLAD WOOD DIRECT GLAZED FIXED WINDOWS (DADE)

MANUFACTURER
KML WINDOWS, INC.
23 BUCHANAN COURT
LONDON, ONTARIO, CANADA N5Z4P9
(519)681-7012

CONSULTANTS
W. W. SCHAEFER ENGINEERING & CONSULTING, P.A.
600 SANDTREE DRIVE; SUITE 203B
PALM BEACH GARDENS, FL 33403
PHONE: 561-775-4902 FAX: 561-775-4903

CERTIFICATION
OCT 19 2000
WARREN W. SCHAEFER, P.E.
P.E. NO. 44135

DRAWING NO. 1003A
REV.
SHEET NO. 1 OF 7

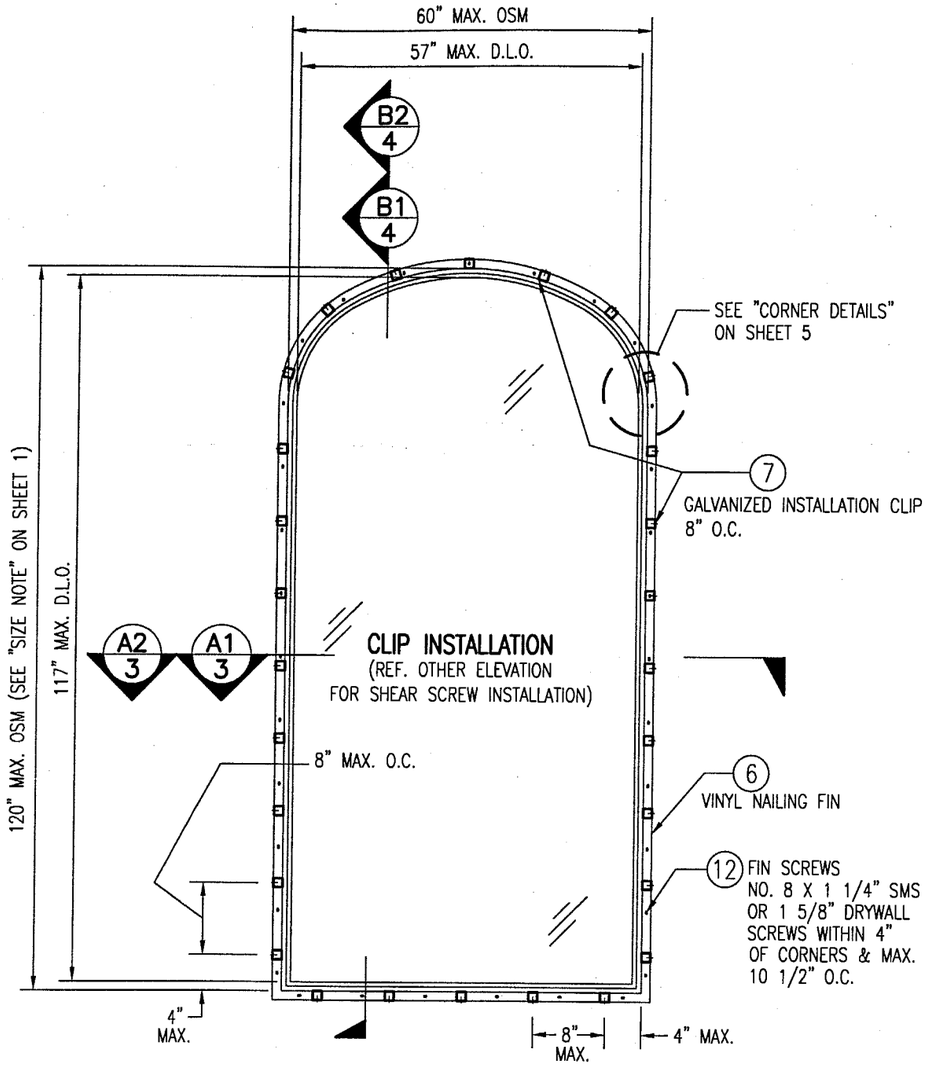

60" X 120" EXTENDED ELLIPTICAL

SCALE:1/2"=1'-0"

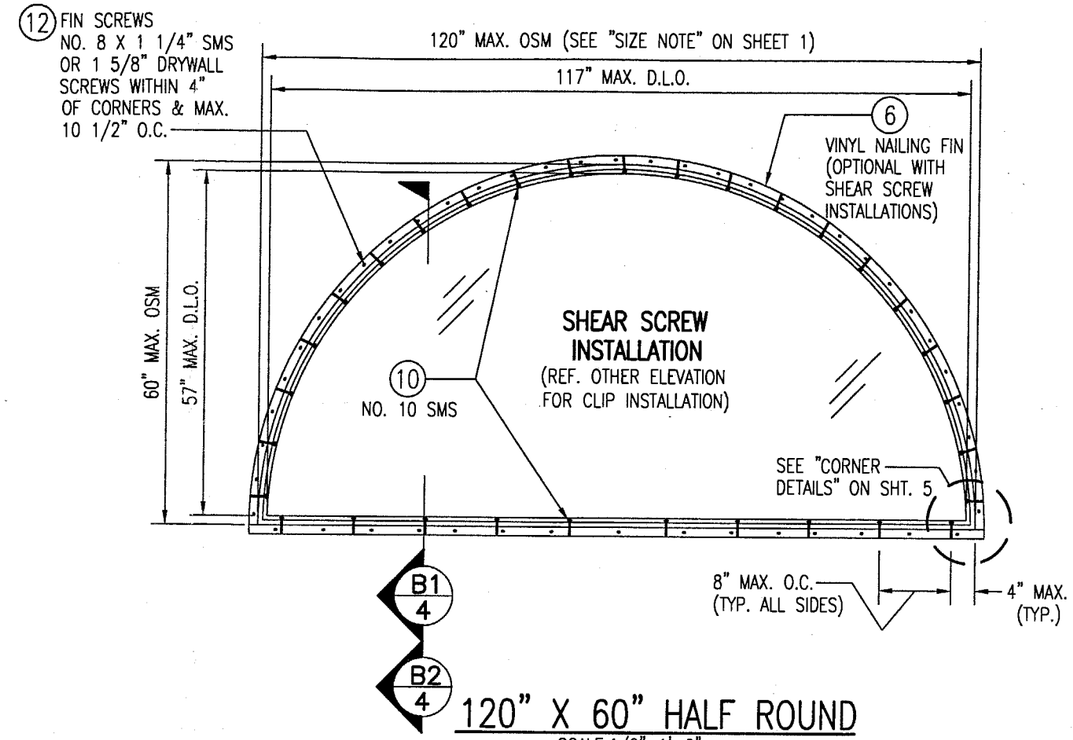

120" X 60" HALF ROUND

SCALE:1/2"=1'-0"

ALL ELEVATIONS VIEWED FROM EXTERIOR

NOTE: FOR COMBINATION OF UNITS. SEE MULLION DRAWING NO. 1003E

ALLOWABLE DESIGN LOADS	
IMPACT UNITS	+70 PSF & -80 PSF
NON-IMPACT UNITS	SEE "NON-IMPACT LOAD TABLE" ON SHEET 6

FOR JAMB FASTENER EMBED & EDGE DISTANCE REQUIREMENTS, SEE SHEET 1

APPROVED AS COMPLYING WITH THE SOUTH FLORIDA BUILDING CODE
DATE APR 19 2001
BY Manuel Perez
PRODUCT CONTROL DIVISION
BUILDING CODE COMPLIANCE OFFICE
ACCEPTANCE NO. 00-1030.04

DRAWN BY: T.M.H.	DATE: 08/28/00
CHECKED BY: W.W.S.	DATE: 08/28/00
PLOT: 1=16	

NO.	REVISION DESCRIPTION	BY	DATE

DRAWING TITLE
ALUMINUM CLAD WOOD DIRECT GLAZED FIXED WINDOWS (DADE)

MANUFACTURER
KML WINDOWS, INC.
23 BUCHANAN COURT
LONDON, ONTARIO, CANADA N5Z4P9
(519)681-7012

CONSULTANTS
W. W. SCHAEFER ENGINEERING & CONSULTING, P.A.
600 SANDTREE DRIVE; SUITE 203B
PALM BEACH GARDENS, FL 33403
PHONE: 561-775-4902 FAX: 561-775-4903

CERTIFICATION
OCT 19 2000
WARREN W. SCHAEFER, P.E.
P.E. NO. 44135

DRAWING NO. 1003A
REV.

SHEET NO. 2 OF 7

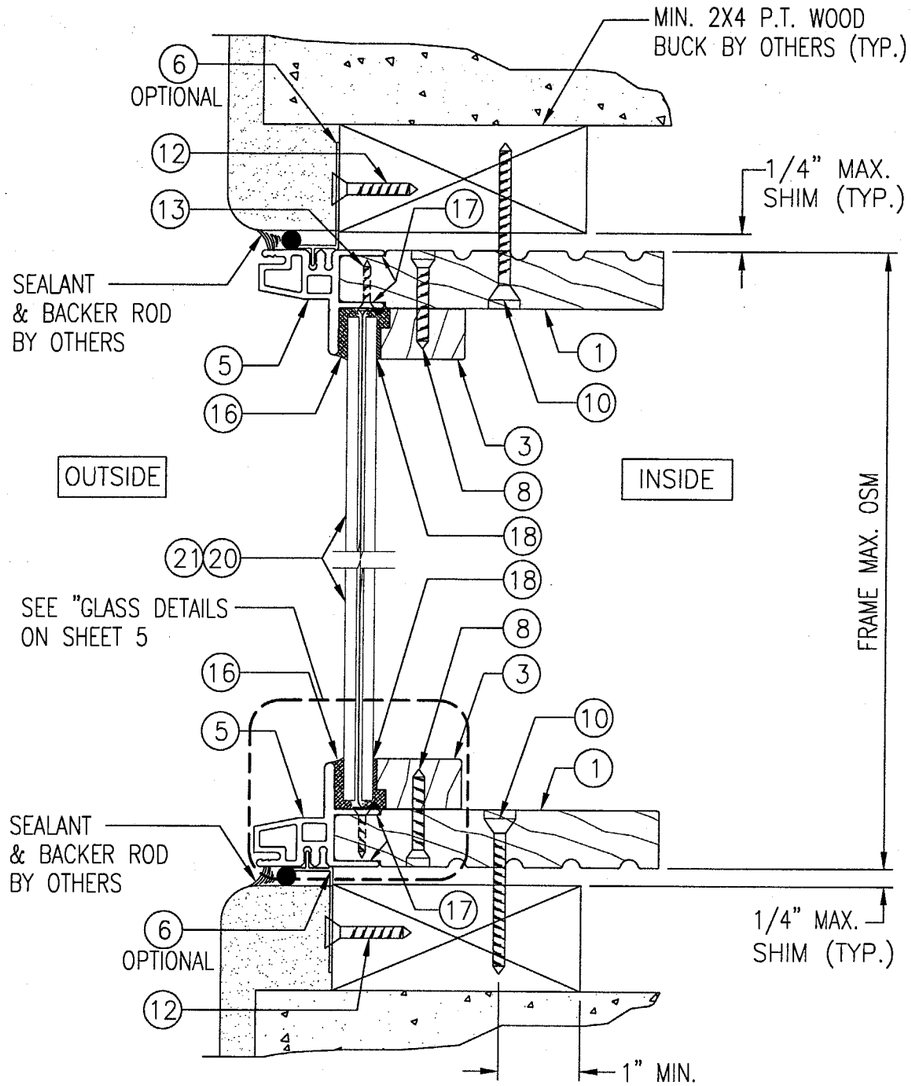

SECTION A1/3

SCALE: HALF FULL SIZE

(NOTE: HORIZONTAL SECTION IS THE SAME)

SHEAR SCREW INSTALLATION

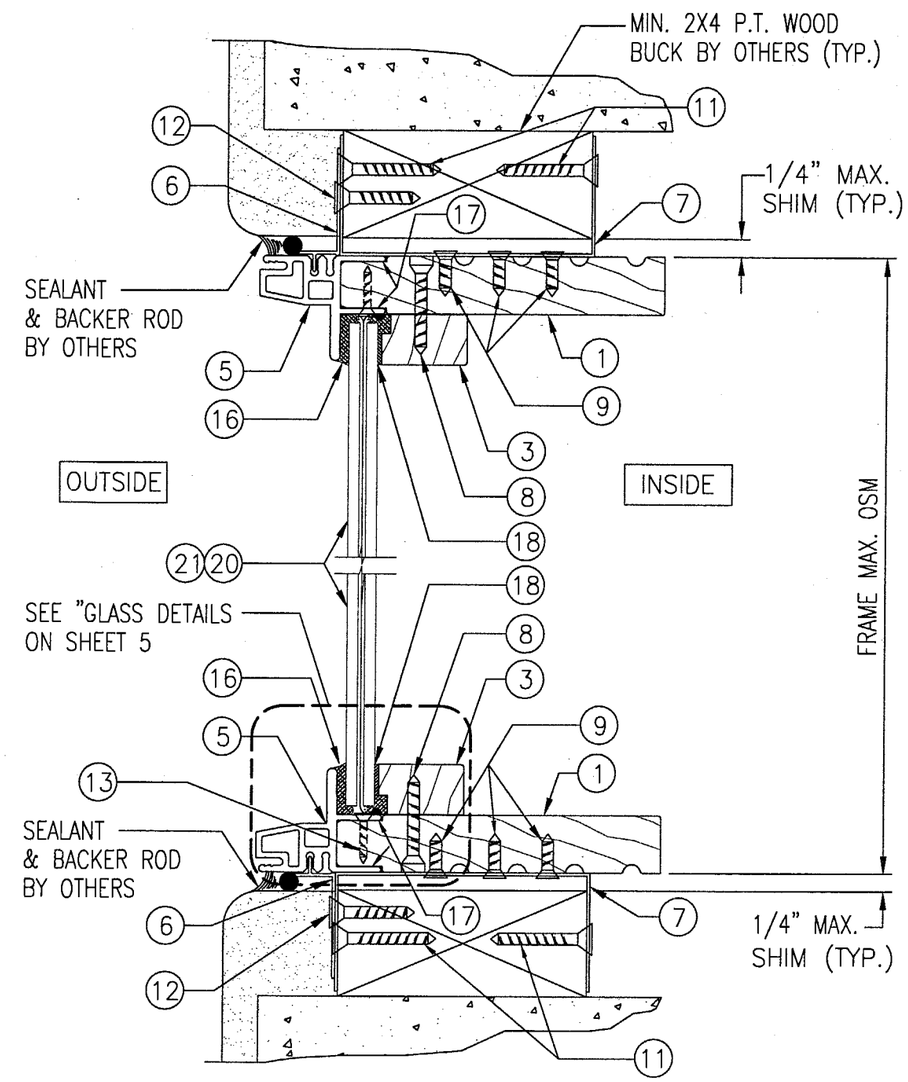

SECTION A2/3

SCALE: HALF FULL SIZE

(NOTE: HORIZONTAL SECTION IS THE SAME)

CLIP INSTALLATION

APPROVED AS COMPLYING WITH THE
SOUTH FLORIDA BUILDING CODE
DATE APR 19 2001
BY
PRODUCT CONTROL DIVISION
BUILDING CODE COMPLIANCE OFFICE
ACCEPTANCE NO. 00-1030.04

DRAWN BY: T.M.H.	DATE: 08/28/00
CHECKED BY: W.W.S.	DATE: 08/28/00

PLOT: 2:1

NO.	REVISION DESCRIPTION	BY	DATE

DRAWING TITLE
ALUMINUM CLAD WOOD DIRECT GLAZED FIXED WINDOWS (DADE)

MANUFACTURER
KML WINDOWS, INC.
23 BUCHANAN COURT
LONDON, ONTARIO, CANADA N5Z4P9
(519)681-7012

CONSULTANTS
W. W. SCHAEFER ENGINEERING & CONSULTING, P.A.
600 SANDTREE DRIVE: SUITE 203B
PALM BEACH GARDENS, FL 33403
PHONE: 561-775-4902 FAX: 561-775-4903

CERTIFICATION
OCT 19 2000
WARREN W. SCHAEFER, P.E.
P.E. NO. 44135

DRAWING NO. 1003A REV.

SHEET NO. 3 OF 7

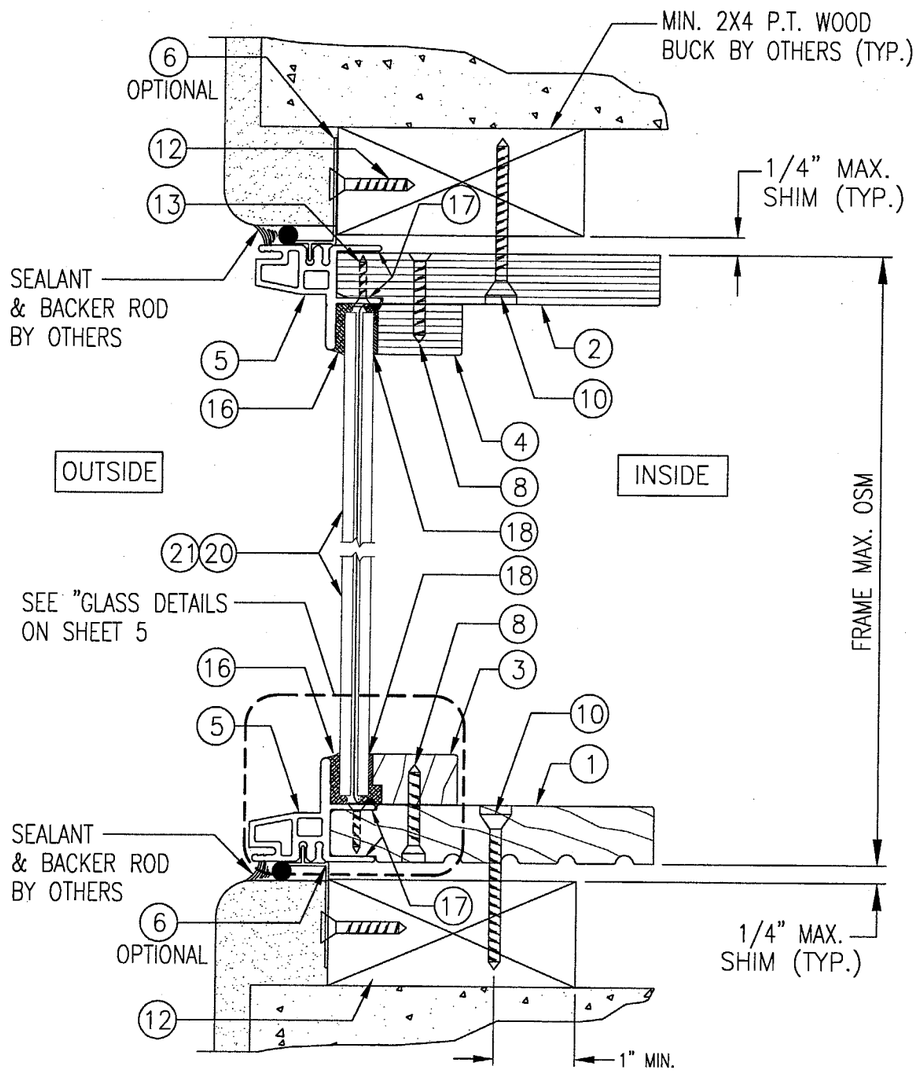

SECTION B1/4

SCALE: HALF FULL SIZE

SHEAR SCREW INSTALLATION

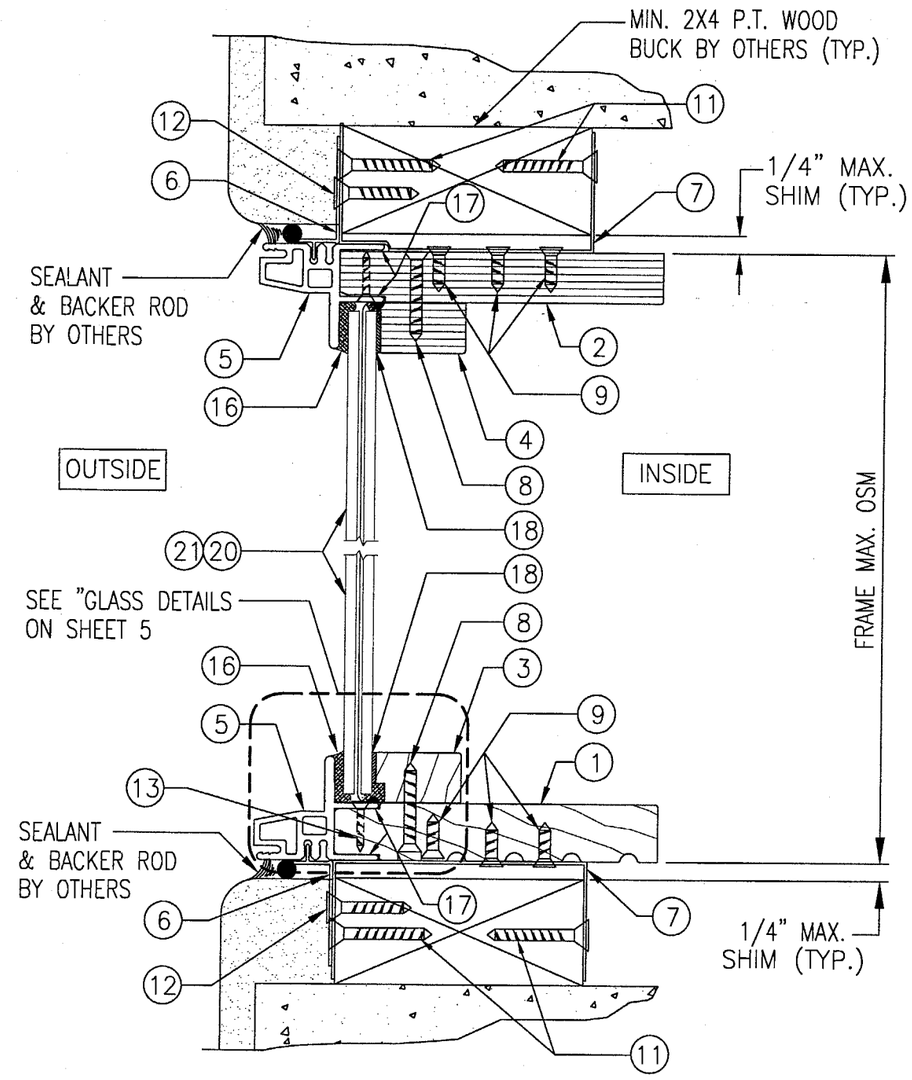

SECTION B2/4

SCALE: HALF FULL SIZE

CLIP INSTALLATION

APPROVED AS COMPLYING WITH THE
SOUTH FLORIDA BUILDING CODE
DATE APR 19 2001
BY Manuel Serra
PRODUCT CONTROL DIVISION
BUILDING CODE COMPLIANCE OFFICE
ACCEPTANCE NO. 00-1030.04

DRAWN BY: T.M.H.	DATE: 08/28/00
CHECKED BY: W.W.S.	DATE: 08/28/00

PLOT: 2:1

NO.	REVISION DESCRIPTION	BY	DATE

DRAWING TITLE
ALUMINUM CLAD WOOD DIRECT GLAZED FIXED WINDOWS (DADE)

MANUFACTURER
KML WINDOWS, INC.
23 BUCHANAN COURT
LONDON, ONTARIO, CANADA N5Z4P9
(519)681-7012

CONSULTANTS
W. W. SCHAEFER ENGINEERING & CONSULTING, P.A.
600 SANDTREE DRIVE; SUITE 203B
PALM BEACH GARDENS, FL 33403
PHONE: 561-775-4902 FAX: 561-775-4903

CERTIFICATION
OCT 19 2000
WARREN W. SCHAEFER, P.E.
P.E. NO. 44135

DRAWING NO. 1003A
REV.

SHEET NO. 4 OF 7

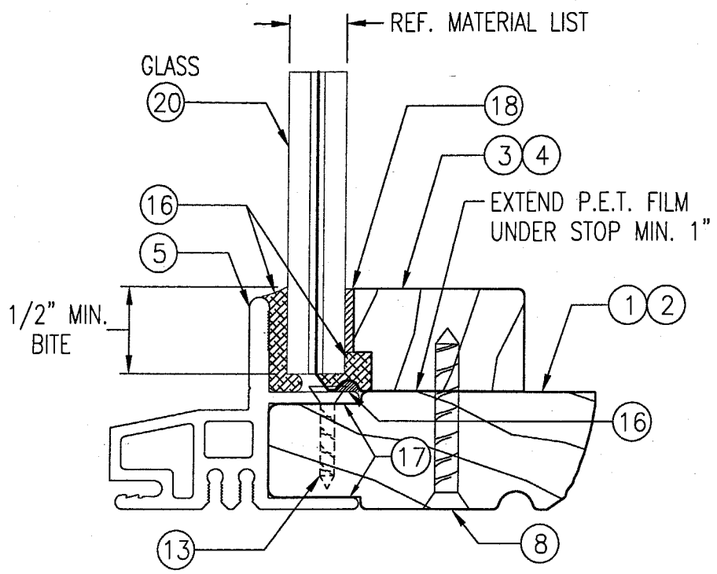

TYPICAL GLASS & GLAZING DETAIL IMPACT UNITS

SCALE: FULL SIZE

NEBULA SAFETY-PLUS (3/16" HT. STR./0.06" RESIN/ 0.01" PET/0.06" RESIN/3/16" HT. STR.)

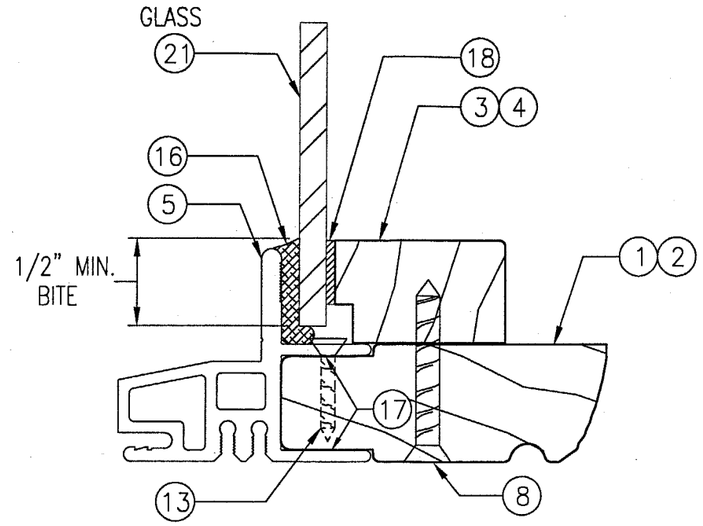

TYPICAL GLASS & GLAZING DETAIL NON-IMPACT UNITS

SCALE: FULL SIZE

1/4" (6 mm) TEMPERED

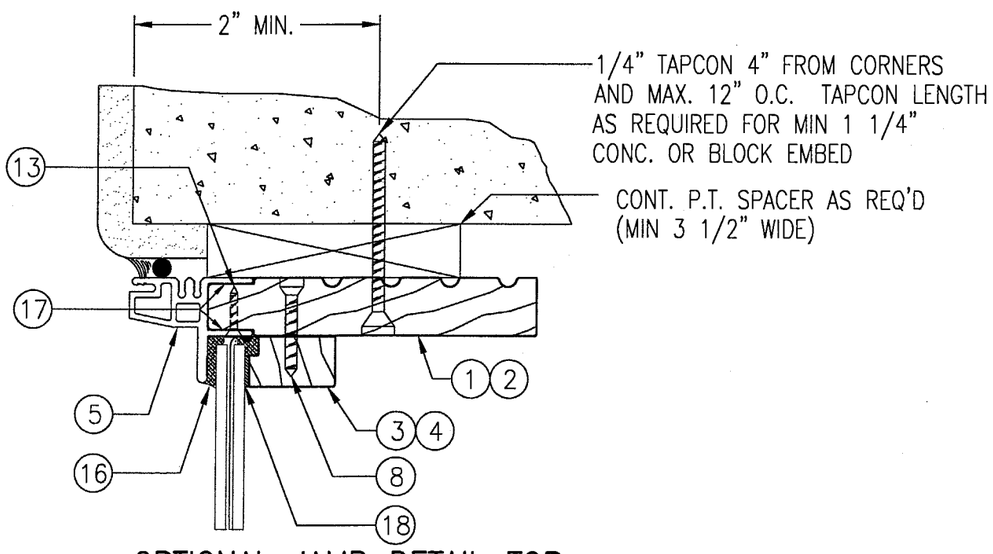

OPTIONAL JAMB DETAIL FOR DIRECT MOUNT TO CONCRETE OR BLOCK

(TYP. ALL UNITS)

SCALE: 1/2 FULL SIZE

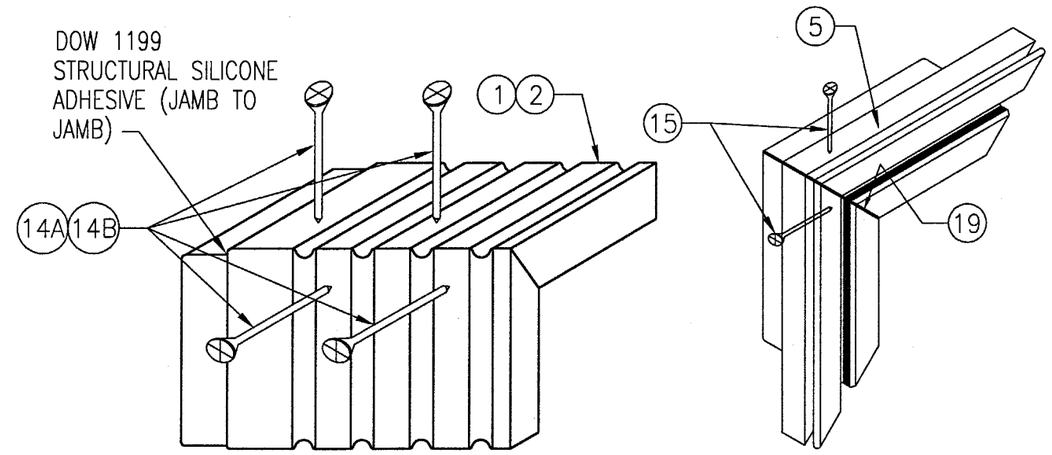

JAMB TO JAMB DETAIL

SCALE: N.T.S.

CLAD TO CLAD DETAIL

SCALE: N.T.S.

CORNER DETAILS

APPROVED AS COMPLYING WITH THE SOUTH FLORIDA BUILDING CODE
DATE APR 19 2001
BY Manuel Perez
PRODUCT CONTROL DIVISION
BUILDING CODE COMPLIANCE OFFICE
ACCEPTANCE NO. 00-1030.04

DRAWN BY: T.M.H.	DATE: 08/28/00
CHECKED BY: W.W.S.	DATE: 08/28/00
PLOT: 2:1	

NO.	REVISION DESCRIPTION	BY	DATE

DRAWING TITLE
ALUMINUM CLAD WOOD DIRECT GLAZED FIXED WINDOWS (DADE)

CONSULTANTS
W. W. SCHAEFER ENGINEERING & CONSULTING, P.A.
600 SANDTREE DRIVE; SUITE 203B
PALM BEACH GARDENS, FL 33403
PHONE: 561-775-4902 FAX: 561-775-4903

MANUFACTURER
KML WINDOWS, INC.
23 BUCHANAN COURT
LONDON, ONTARIO, CANADA N5Z4P9
(519)681-7012

CERTIFICATION
OCT 19 2000
WARREN W. SCHAEFER, P.E.
P.E. NO. 44135

DRAWING NO. 1003A
REV.
SHEET NO. 5 OF 7

DESIGN LOAD CAPACITY (PSF) NON-IMPACT WINDOWS ONLY

WINDOW SIZE (OSM)		GLASS 21	
WIDTH	HEIGHT	POS	NEG
24"	36"	100	200
30"		100	160
36"		100	133
42"		100	133
48"		100	133
54"		100	133
60"		100	133
66"		100	133
72"		100	133
24"	48"	100	200
30"		100	160
36"		100	133
42"		100	114
48"		88	100
54"		88	100
60"		88	100
66"		88	100
72"		88	100
24"	60"	100	188
30"		100	160
36"		100	133
42"		100	114
48"		88	100
54"		78	89
60"		70	80
66"		70	80
72"		70	80
24"	72"	100	180
30"		100	152
36"		100	133
42"		100	114
48"		88	100
54"		78	89
60"		70	80
66"		64	73
72"		58	67
24"	84"	100	175
30"		100	146
36"		100	127
42"		100	114
48"		88	100
54"		78	89
60"		70	80
66"		64	73
72"		58	67

DESIGN LOAD CAPACITY (PSF) NON-IMPACT WINDOWS ONLY

WINDOW SIZE (OSM)		GLASS 21	
WIDTH	HEIGHT	POS	NEG
24"	96"	100	171
30"		100	142
36"		100	123
42"		96	110
48"		88	100
54"		78	89
60"		70	80
66"		64	73
72"		58	67
24"	108"	100	169
30"		100	139
36"		100	120
42"		93	106
48"		84	96
54"		78	89
60"		70	80
66"		64	73
24"	120"	100	167
30"		100	137
36"		100	118
42"		91	104
48"		82	94
54"		75	86
60"		70	80
24"	132"	100	165
30"		100	135
36"		100	116
42"		89	102
48"		80	91
54"		71	81
24"	144"	100	164
30"		100	133
36"		97	111
42"		83	95
48"		73	83

NOTES:

1. THE LOADS IN THESE TABLES ARE AS DETERMINED BY TESTING & COMPARATIVE ANALYSIS WITH THE CONTROLLING FACTOR BEING THE WORSE CASE OF GLASS SIZE & AREA, UNIT AREA, OR FASTENER CAPABILITY.
2. THE LOADS IN THESE TABLES ARE FOR NON-IMPACT RATED WINDOWS ONLY. FOR IMPACT WINDOWS, SEE TABLE ON SHEETS 1 & 2.
3. THE LOADS IN THESE TABLES MAY NOT BE INTERPOLATED.
4. THE PRESSURES IN THESE TABLES CONSIDER A JAMB FASTENER SPACING OF 9" O.C. PRESSURES MUST BE REDUCED TO +/-62 PSF IF 12" SPACING IS USED.

POS = ALLOWABLE POSITIVE DESIGN PRESSURE AS CONTROLLED BY WIND PRESSURE & WATER INFILTRATION.
NEG = ALLOWABLE DESIGN NEGATIVE WIND PRESSURE.

GLASS 21 = 1/4" (6 mm) TEMPERED

NOTE: HEIGHT & WIDTH CAN BE INTERCHANGED

APPROVED AS COMPLYING WITH THE SOUTH FLORIDA BUILDING CODE
DATE APR 19 2001
BY Manuel Perez
PRODUCT CONTROL DIVISION
BUILDING CODE COMPLIANCE OFFICE
ACCEPTANCE NO. 00-1030.04

DRAWN BY: T.M.H.	DATE: 08/28/00
CHECKED BY: W.W.S.	DATE: 08/28/00

PLOT: FULL

NO.	REVISION DESCRIPTION	BY	DATE

DRAWING TITLE
ALUMINUM CLAD WOOD DIRECT GLAZED FIXED WINDOWS (DADE)

MANUFACTURER
KML WINDOWS, INC.
23 BUCHANAN COURT
LONDON, ONTARIO, CANADA N5Z4P9
(519)681-7012

CONSULTANTS
W. W. SCHAEFER ENGINEERING & CONSULTING, P.A.
600 SANDTREE DRIVE; SUITE 203B
PALM BEACH GARDENS, FL 33403
PHONE: 561-775-4902 FAX: 561-775-4903

CERTIFICATION
OCT 19 2000
WARREN W. SCHAEFER, P.E.
P.E. NO. 44135

DRAWING NO. 1003A
REV.

SHEET NO. 6 OF 7

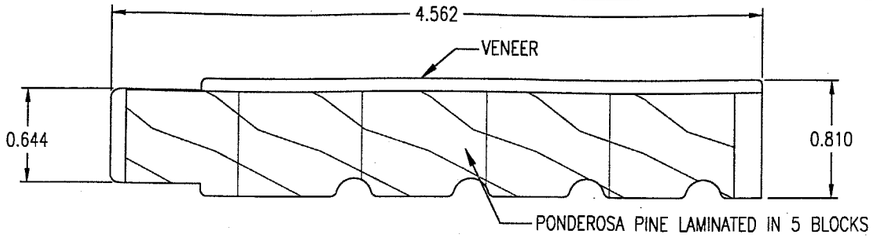

1 LINEAL WOOD FRAME JAMB

PONDEROSA PINE

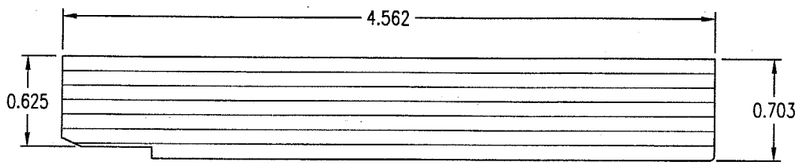

2 RADIAL WOOD FRAME JAMB

(LAMINATED VENEER)

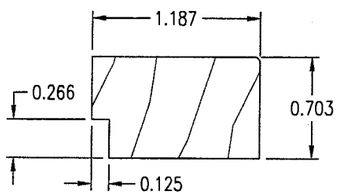

3 LINEAL WOOD GLAZING STOP

PONDEROSA PINE

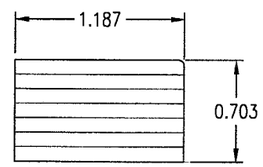

4 RADIAL WOOD GLAZING STOP

(LAMINATED VENEER)

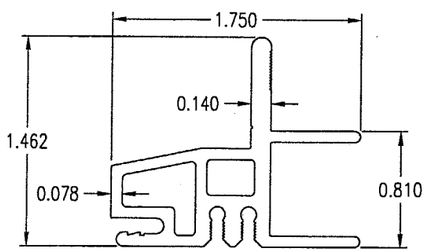

5 FRAME CLADDING

(6063–T5 ALUMINUM)

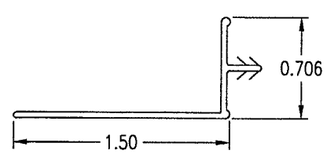

6 NAILING FIN

(VINYL)

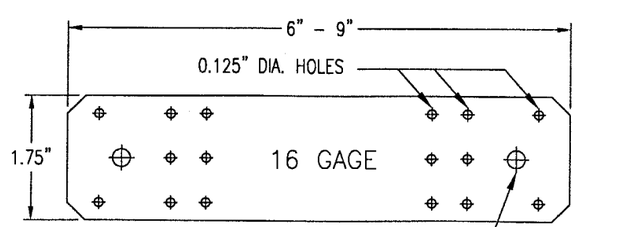

7 INSTALLATION CLIP

(GALVANIZED STEEL)
Fy = 33 ksi MIN.

MATERIAL LIST

PART NO.	REF. NO.	DESCRIPTION	NOTES
		PARTS & EXTRUSIONS	
1	PF1277	LINEAL JAMB	SEE NOTE 1 THIS SHEET.
2	PF1231	RADIAL JAMB	LAMINATED VENEER
3	PF1205	LINEAL GLAZING STOP	SEE NOTE 1 THIS SHEET.
4	PF1218	RADIAL GLAZING STOP	LAMINATED VENEER
5	KM34	FRAME CLADDING	ALUMINUM (6063–T5)
6	PF1214 PF1326	VINYL NAILING FIN	OPTIONAL AT SHEAR SCREW INSTALLATION UNITS
7	SK1031	GALVANIZED 16 GA. STEEL INSTALLATION CLIP	GALVANIZED STEEL, INC. (Fy = 33 KSI MIN.) 4" FROM CORNERS & 8" O.C.
		FASTENERS & SEALANTS	
8	–	#8 x 1 1/4" SMS SCREW	4" FROM CORNERS & MAX. 12" O.C.
9	–	#8 x 5/8" PAN HEAD SMS SCREW	3 PER INSTALLATION CLIP INTO JAMB
10	–	#10 SMS SCREW WITH MINIMUM 1 3/8" EMBED INTO THE BUCK (JAMB TO BUCK)	4" FROM CORNERS & MAX. 8" O.C.
11	–	#8 x 1 1/4" SMS SCREW	2 PER CLIP INTO BUCK (1 EA. SIDE OF BUCK)
12	–	S/STL #8 x 1 1/4" SMS SCREW OR 1 5/8" DRYWALL SCREW	4" FROM ENDS & MAX. 10 1/2" O.C. WITH FIN
13	–	#6 x 3/4" SMS SCREW	4" FROM CORNERS & 12" O.C.
14A	–	#8 x 2" SMS SCREW	4 @ EACH RECTANGULAR JAMB CORNER
14B	–	#8 x 1 1/2" SMS SCREW	4 @ EACH RADIUS JAMB CORNER
15	–	#6 x 3/4" SMS SCREW	2 @ CLAD CORNERS INTO CLAD SPLINES
16	–	DOW 995 SILICONE	FOR 1/2" GLAZING BITE
17	–	STRUCTURAL SILICONE ADHESIVE	DOW 1199 CONTINUOUS CLADDING TO JAMB
		OTHER	
18	–	NORTON NORGLAZE .0625" X .437" GLAZING TAPE	POLYOLEFIN FOAM W/ ACRYLIC ADHESIVE
19	–	TREMCO 440 BUTYL TAPE GASKET	TRIM OFF AT EDGES (TYP. AT CLAD CORNERS)
20	–	1/2" LAMINATED HEAT. STR. GLASS NEBULA GLASSLAM SAFETY–PLUS	3/16" HEAT STR./0.06 RESIN/0.01 P.E.T./ 0.06 RESIN/3/16" HEAT STR.
21	–	1/4" (6mm) THICK TEMPERED GLASS	

1. ALL WOOD USED WITH TESTED UNITS IS MINIMUM GRADE 2 PONDEROSA PINE. ALTERNATE WOOD SPECIES ACCEPTABLE WITH THIS PRODUCT ARE THE FOLLOWING MINIMUM GRADE 2 WOODS:
   1. MAHOGANY
   2. OAK
   3. CHERRY
   4. CYPRUS
   5. DOUGLAS FIR
   6. MAPLE
   7. TEAK

APPROVED AS COMPLYING WITH THE SOUTH FLORIDA BUILDING CODE
DATE APR 19 2001
BY Manuel Perez
PRODUCT CONTROL DIVISION
BUILDING CODE COMPLIANCE OFFICE
ACCEPTANCE NO. 00-1030.04

DRAWN BY: T.M.H.	DATE: 08/28/00
CHECKED BY: W.W.S.	DATE: 08/28/00
PLOT: FULL	

NO.	REVISION DESCRIPTION	BY	DATE

DRAWING TITLE
ALUMINUM CLAD WOOD DIRECT GLAZED FIXED WINDOWS (DADE)

MANUFACTURER
KML WINDOWS, INC.
23 BUCHANAN COURT
LONDON, ONTARIO, CANADA N5Z4P9
(519)681–7012

CONSULTANTS
W. W. SCHAEFER ENGINEERING & CONSULTING, P.A.
600 SANDTREE DRIVE; SUITE 203B
PALM BEACH GARDENS, FL 33403
PHONE: 561–775–4902 FAX: 561–775–4903

CERTIFICATION
OCT 19 2000
WARREN W. SCHAEFER, P.E.
P.E. NO. 44135

DRAWING NO. 1003A
REV.
SHEET NO. 7 OF 7