MIAMI-DADE

MIAMI-DADE COUNTY, FLORIDA
METRO-DADE FLAGLER BUILDING

BUILDING CODE COMPLIANCE OFFICE
METRO-DADE FLAGLER BUILDING
140 WEST FLAGLER STREET, SUITE 1603
MIAMI, FLORIDA 33130-1563
(305) 375-2901 FAX (305) 375-2908

CONTRACTOR LICENSING SECTION
(305) 375-2527 FAX (305) 375-2558

CONTRACTOR ENFORCEMENT DIVISION
(305) 375-2966 FAX (305) 375-2908

PRODUCT CONTROL DIVISION
(305) 375-2902 FAX (305) 372-6339

PRODUCT CONTROL NOTICE OF ACCEPTANCE

Pino-Windows Corporation
6860 N.W. 75 Street
Medley ,FL 33166

Your application for Notice of Acceptance (NOA) of:
Series 300 Aluminum Horizontal Sliding Window
under Chapter 8 of the Code of Miami-Dade County governing the use of Alternate Materials and Types of Construction, and completely described herein, has been recommended for acceptance by the Miami-Dade County Building Code Compliance Office (BCCO) under the conditions specified herein.

This NOA shall not be valid after the expiration date stated below. BCCO reserves the right to secure this product or material at any time from a jobsite or manufacturer's plant for quality control testing. If this product or material fails to perform in the approved manner, BCCO may revoke, modify, or suspend the use of such product or material immediately. BCCO reserves the right to revoke this approval, if it is determined by BCCO that this product or material fails to meet the requirements of the South Florida Building Code.

The expense of such testing will be incurred by the manufacturer.

ACCEPTANCE NO.: 00-1107.02
EXPIRES: 01/04/2006

Raul Rodriguez
Chief Product Control Division

THIS IS THE COVERSHEET, SEE ADDITIONAL PAGES FOR SPECIFIC AND GENERAL CONDITIONS
BUILDING CODE & PRODUCT REVIEW COMMITTEE

This application for Product Approval has been reviewed by the BCCO and approved by the Building Code and Product Review Committee to be used in Miami-Dade County, Florida under the conditions set forth above.

Francisco J. Quintana, R.A.
Director
Miami-Dade County
Building Code Compliance Office

APPROVED: 01/04/2001

Pino Windows Corporation

ACCEPTANCE No.: 00-1107.02

APPROVED : JAN 0 4 2001

EXPIRES : JAN 0 4 2006

NOTICE OF ACCEPTANCE: SPECIFIC CONDITIONS

1. SCOPE

1.1 This approves an aluminum horizontal sliding window, as described in Section 2 of this Notice of Acceptance, designed to comply with the South Florida Building Code (SFBC), 1994 Edition for Miami-Dade County, for the locations where the pressure requirements, as determined by SFBC Chapter 23, do not exceed the Design Pressure Rating values indicated in the approved drawings.

2. PRODUCT DESCRIPTION

2.1 The **Series 300 Aluminum Horizontal Sliding Window** and its components shall be constructed in strict compliance with the following documents: Drawing No **W00-47**, titled "Series-300 Alum. Horiz. Sliding Window" Sheets 1 through 8 of 8, prepared by Al-Farooq Corp., dated 10/27/00, signed and sealed by Humayoun Farooq, P.E., bearing the Miami-Dade County Product Control approval stamp with the Notice of Acceptance number and approval date by the Miami-Dade County Product Control Division. These documents shall hereinafter be referred to as the approved drawings.

3. LIMITATIONS

3.1 This approval applies to single unit applications only, as shown in approved drawings.

3.2 For Design Pressure Rating vs. Window Size, see "Design Load Capacity" tables corresponding to each glass thickness, sill height and anchor option, as shown in approved drawings.

4. INSTALLATION

4.1 The aluminum horizontal sliding window and its components shall be installed in strict compliance with the approved drawings.

4.2 Hurricane protection system (shutters): the installation of this unit **will require** a hurricane protection system.

5. LABELING

5.1 Each unit shall bear a permanent label with the manufacturer's name or logo, city, state and following statement: "Miami-Dade County Product Control Approved".

6. BUILDING PERMIT REQUIREMENTS

6.1 Application for building permit shall be accompanied by copies of the following:

6.1.1 This Notice of Acceptance

6.1.2 Duplicate copies of the approved drawings, as identified in Section 2 of this Notice of Acceptance, clearly marked to show the components selected for the proposed installation.

6.1.3 Any other documents required by the Building Official or the South Florida Building Code (SFBC) in order to properly evaluate the installation of this system.

Manuel Perez, P.E. Product Control Examiner
Product Control Division

Pino Windows Corporation

ACCEPTANCE No.: 00-1107.02

APPROVED : JAN 0 4 2001

EXPIRES : JAN 0 4 2006

NOTICE OF ACCEPTANCE: STANDARD CONDITIONS

1. Renewal of this Acceptance (approval) shall be considered after a renewal application has been filed and the original submitted documentation, including test supporting data, engineering documents, are no older than eight (8) years.

2. Any and all approved products shall be permanently labeled with the manufacturer's name, city, state, and the following statement: "Miami-Dade County Product Control Approved", or as specifically stated in the specific conditions of this Acceptance.

3. Renewals of Acceptance will not be considered if:
   a) There has been a change in the South Florida Building Code affecting the evaluation of this product and the product is not in compliance with the code changes;
   b) The product is no longer the same product (identical) as the one originally approved;
   c) If the Acceptance holder has not complied with all the requirements of this acceptance, including the correct installation of the product;
   d) The engineer who originally prepared, signed and sealed the required documentation initially submitted is no longer practicing the engineering profession.

4. Any revision or change in the materials, use, and/or manufacture of the product or process shall automatically be cause for termination of this Acceptance, unless prior written approval has been requested (through the filing of a revision application with appropriate fee) and granted by this office.

5. Any of the following shall also be grounds for removal of this Acceptance:
   a) Unsatisfactory performance of this product or process.
   b) Misuse of this Acceptance as an endorsement of any product, for sales, advertising or any other purpose.

6. The Notice of Acceptance number preceded by the words Miami-Dade County, Florida, and followed by the expiration date may be displayed in advertising literature. If any portion of the Notice of Acceptance is displayed, then it shall be done in its entirety.

7. A copy of this Acceptance as well as approved drawings and other documents, where it applies, shall be provided to the user by the manufacturer or its distributors and shall be available for inspection at the job site at all time. The engineer need not reseal the copies.

8. Failure to comply with any section of this Acceptance shall be cause for termination and removal of Acceptance.

9. This Notice of Acceptance consists of pages 1, 2 and this last page 3.

Manuel Perez, P.E. Product Control Examiner
Product Control Division

END OF THIS ACCEPTANCE

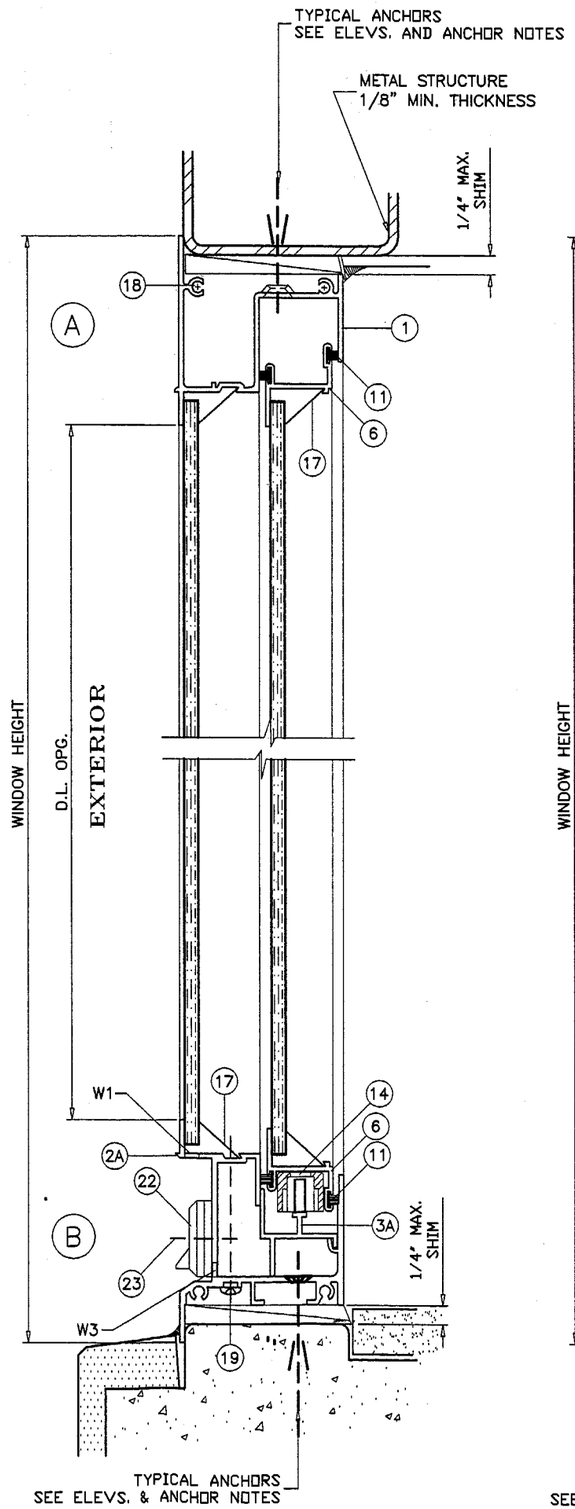

STANDARD SILL

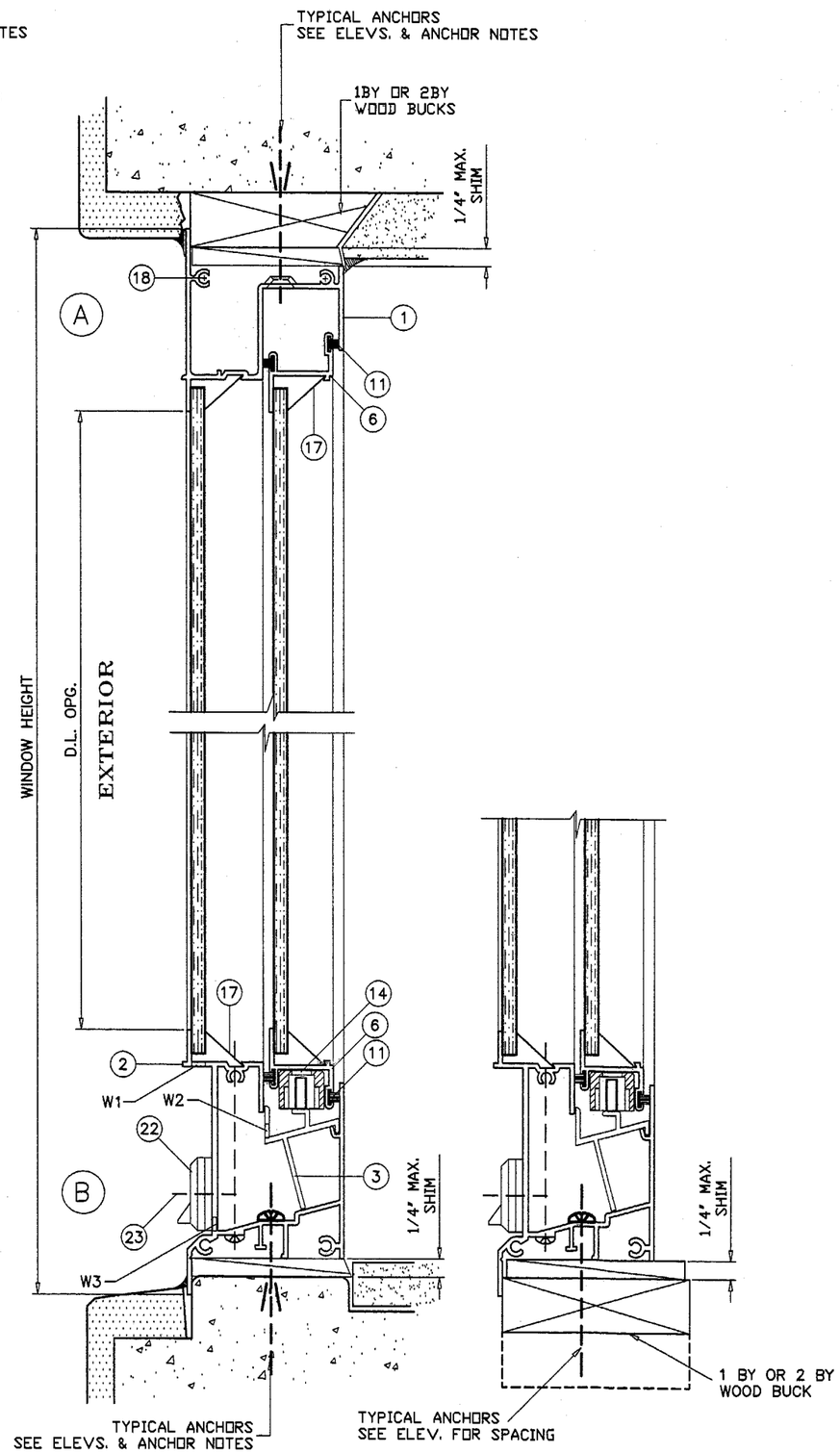

HI-RISE SILL

NOTES:

1. THIS STRUCTURE IS DESIGNED AS PER THE SOUTH FLORIDA BUILDING CODE 1994 EDITION FOR DADE COUNTY. ALSO FOR WIND LOADS AS PER ASCE 7-88 USING CORRESPONDING LOADS.
2. WOOD BUCKS BY OTHERS, MUST BE ANCHORED PROPERLY TO TRANSFER LOADS TO THE STRUCTURE.
3. ANCHORS SHALL BE AS LISTED, SPACED AS SHOWN ON DETAILS. ANCHOR EMBEDMENT TO BASE MATERIAL SHALL BE BEYOND WALL DRESSING OR STUCCO.

TYPICAL ANCHORS: SEE ELEVS. FOR SPACING

3/16" OR 1/4" TAPCONS

INTO 2BY WOOD BUCKS OR WOOD STRUCTURE
1-1/4" MIN. PENETRATION INTO WOOD

THRU 1BY WOOD BUCKS INTO MASONRY OR DIRECTLY INTO MASONRY
1-1/4" MIN. EMBED INTO MASONRY

ATTACHMENT TO MULLION OR METAL STRUCTURES

A) NO SHIM SPACE

USE #10 SMS AND CHARTS FOR 1/4" TAPCONS

B) 1/4" SHIM SPACE

USE 3/16" TEKS AND CHARTS FOR 3/16" TAPCONS
USE 1/4" TEKS AND CHARTS FOR 1/4" TAPCONS

SEALANTS:

ALL FRAME AND VENT CORNERS, INSTALLATION SCREWS AND BOTTOM OF FIXED MEETING RAIL SEALED WITH CLEAR/ALUM COLORED SEALANT.

WEEPHOLES:

W1 = (1-7/8" X 5/16") AT4" AND 25" FROM ENDS
W2 = (1/4" X 2") AT MIDPOINT OF TRACK
W3 = (7/8" X 3/8") AT 3-1/2" FROM EACH END

NON IMPACT RESISTANT WINDOWS
DADE COUNTY APPROVED IMPACT RESISTANT SHUTTERS REQUIRED FOR ALL INSTALLATIONS.

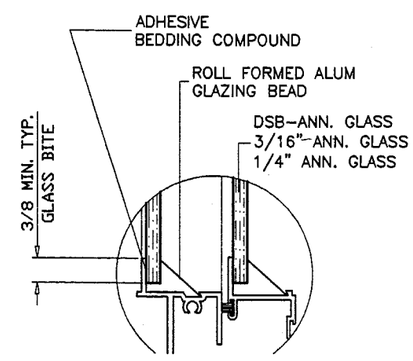

GLAZING DETAIL

Engr: DR. HUMAYOUN FAROOQ
STRUCTURES
FLA. PE # 16557

DEC 14 2000

APPROVED AS COMPLYING WITH THE SOUTH FLORIDA BUILDING CODE
DATE: January 04, 2001
BY: Mamuel Perez
PRODUCT CONTROL DIVISION
BUILDING CODE COMPLIANCE OFFICE
ACCEPTANCE NO. 00-1107.02

AL-FAROOQ CORPORATION
ENGINEERS, PLANNERS & PRODUCT DESIGN
1235 SW 87 AVE
MIAMI, FLORIDA 33174
TEL. (305) 264-8100 FAX. (305) 262-6978
COMP-ANL\W00-47PW

SERIES-300 ALUM HORIZ. SLIDING WINDOW

PINO WINDOWS CORPORATION
6860 N.W. 75TH STREET
MEDLEY, FL. 33166
TEL. (305) 888-9946 FAX (305) 888-8079

revisions:			
no	date	by	description

date: 10-27-00
scale: 1/2" = 1"
dr. by: HAMID
chk. by:

drawing no. W00-47

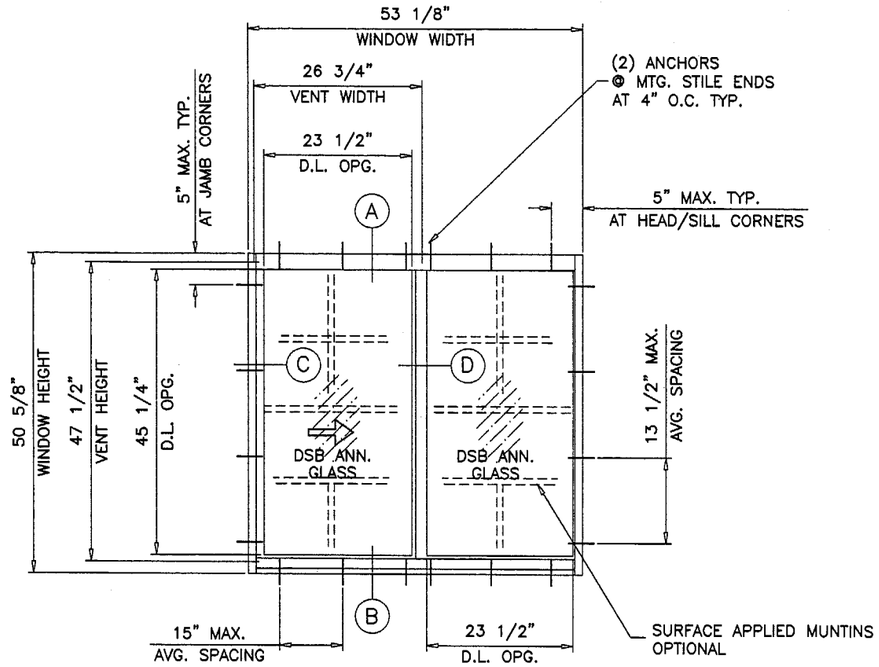

TYPICAL ELEVATION
TESTED UNIT
GLASS WIDTHS TO BE EQUAL ON MOVING AND FIXED LITES

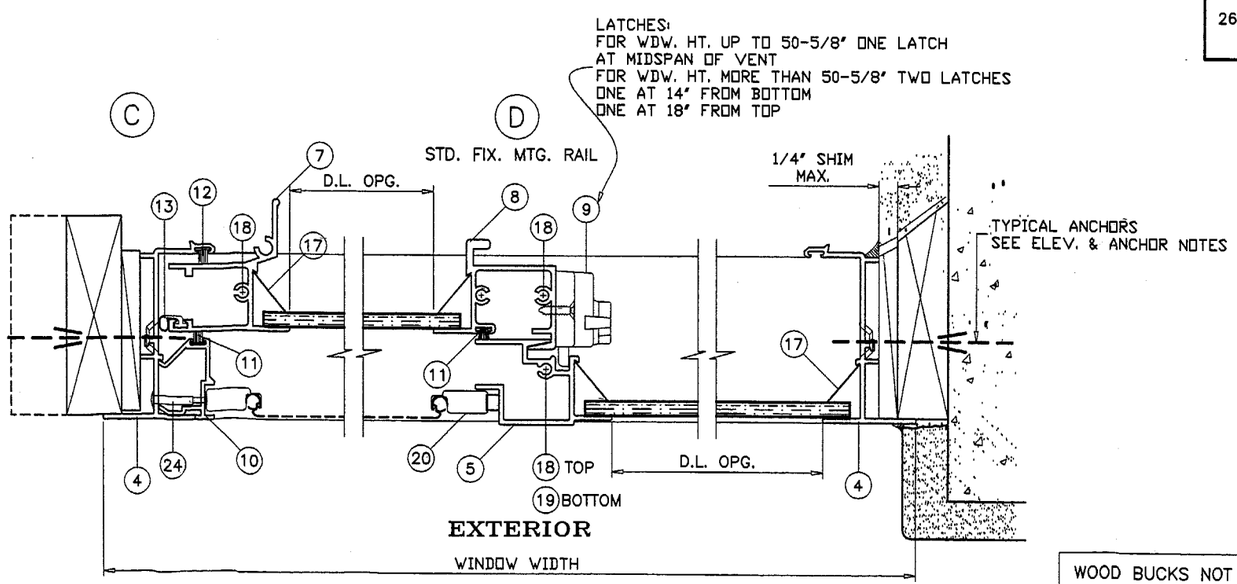

XO LAYOUT
OX OPPOSITE

DESIGN LOAD CAPACITY - PSF (XO OR OX SIZES) WINDOWS WITH STANDARD SILL				
WINDOW DIMS. INCHES		A	3/16" TAPCONS DSB - ANN. GLASS	
WIDTH	HEIGHT		EXT. (+)	INT. (-)
24	24	4	53.3	66.7
36		4	53.3	66.7
48		6	53.3	66.7
60		6	53.3	66.7
72		6	53.3	66.7
24	36	4	53.3	66.7
36		4	53.3	66.7
48		6	53.3	66.7
60		6	53.3	66.4
72		6	53.3	54.6
24	48	4	53.3	66.7
36		4	53.3	66.7
48		6	53.3	61.3
24	60	4	53.3	66.7
36		4	43.7	66.4
19-1/8	26	4	53.3	66.7
26-1/2		4	53.3	66.7
37		4	53.3	66.7
53-1/8		6	53.3	66.7
74		6	53.3	66.7
19-1/8	38-3/8	4	53.3	66.7
26-1/2		4	53.3	66.7
37		4	53.3	66.7
53-1/8		6	53.3	66.7
19-1/8	50-5/8	4	53.3	66.7
26-1/2		4	53.3	66.7
37		4	53.3	66.7
53-1/8		6	52.5	52.5
19-1/8	63	4	53.3	66.7
26-1/2		4	50.4	66.7
37		4	36.7	59.6

DESIGN LOAD CAPACITY - PSF (XO OR OX SIZES) WINDOWS WITH HI-RISE SILL				
WINDOW DIMS. INCHES		A	3/16" TAPCONS DSB - ANN. GLASS	
WIDTH	HEIGHT		EXT. (+)	INT. (-)
24	24	4	65.0	66.7
36		4	65.0	66.7
48		6	65.0	66.7
60		6	65.0	66.7
72		6	65.0	66.7
24	36	4	65.0	66.7
36		4	65.0	66.7
48		6	65.0	66.7
60		6	65.0	66.7
72		6	55.8	55.8
24	48	4	65.0	66.7
36		4	65.0	66.7
48		6	61.2	62.3
24	60	4	64.3	66.7
36		4	43.7	66.7
19-1/8	26	4	65.0	66.7
26-1/2		4	65.0	66.7
37		4	65.0	66.7
53-1/8		6	65.0	66.7
74		6	65.0	66.7
19-1/8	38-3/8	4	65.0	66.7
26-1/2		4	65.0	66.7
37		4	65.0	66.7
53-1/8		6	65.0	66.7
19-1/8	50-5/8	4	65.0	66.7
26-1/2		4	65.0	66.7
37		4	65.0	66.7
53-1/8		6	52.5	52.5
19-1/8	63	4	65.0	66.7
26-1/2		4	50.4	66.7
37		4	36.7	59.6

A = NO. OF ANCHORS PER HEAD/SILL

WOOD BUCKS NOT BY PINO WINDOWS, MUST SUSTAIN LOADS IMPOSED BY GLAZING SYSTEM AND TRANSFER THEM TO THE BUILDING STRUCTURE.

Engr: DR. HUMAYOUN FAROOQ
STRUCTURES
FLA. PE # 16557

DEC 14 2000

APPROVED AS COMPLYING WITH THE SOUTH FLORIDA BUILDING CODE
DATE January 04, 2001
BY Manuel Seres
PRODUCT CONTROL DIVISION
BUILDING CODE COMPLIANCE OFFICE
ACCEPTANCE NO. 00-1107.02

AL-FAROOQ CORPORATION
ENGINEERS, PLANNERS & PRODUCT DESIGN
1235 SW 87 AVE
MIAMI, FLORIDA 33174
TEL. (305) 264-8100 FAX. (305) 262-6978

COMP-ANL\WOO-47PW

SERIES-300 ALUM HORIZ. SLIDING WINDOW

PINO WINDOWS CORPORATION
6860 N.W. 75TH STREET
MEDLEY, FL. 33166
TEL. (305) 888-9946 FAX (305) 888-8079

revisions:

no	date	by	description

date: 10-27-00
scale: 1/2" = 1"
dr. by: HAMID
chk. by:

drawing no.
W00-47

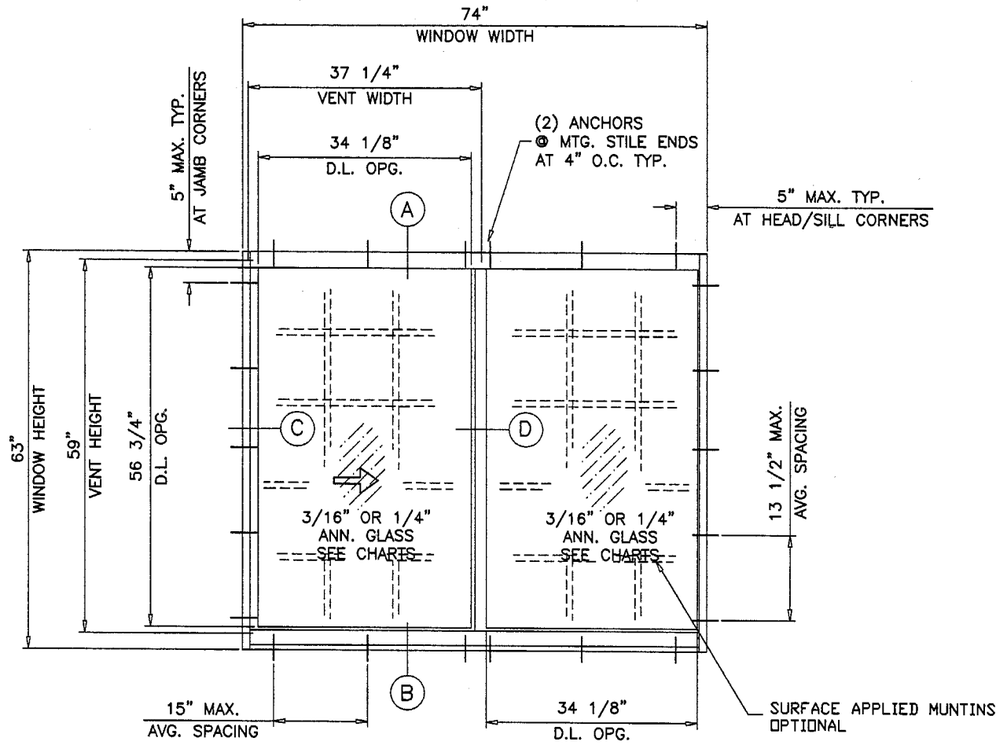

TYPICAL ELEVATION
TESTED UNIT
GLASS WIDTHS TO BE EQUAL ON MOVING AND FIXED LITES

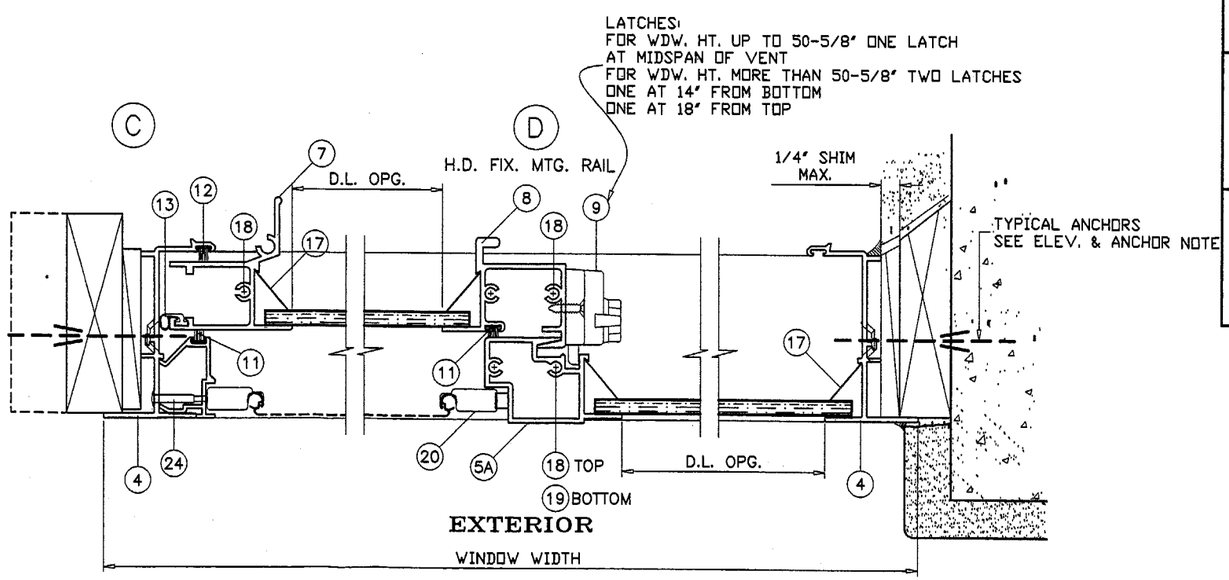

XO LAYOUT
OX OPPOSITE

DESIGN LOAD CAPACITY – PSF (XO OR OX SIZES)
WINDOWS WITH STANDARD SILL

WINDOW DIMS. INCHES		A	3/16" TAPCONS				1/4" TAPCONS			
			3/16"-ANN. GLASS		1/4"-ANN. GLASS		3/16"-ANN. GLASS		1/4"-ANN. GLASS	
WIDTH	HEIGHT		EXT. (+)	INT. (–)	EXT. (+)	INT. (–)	EXT. (+)	INT. (–)	EXT. (+)	INT. (–)
24	24	4	53.3	121.4	53.3	179.3	53.3	121.4	53.3	179.3
36		4	53.3	121.4	53.3	177.3	53.3	121.4	53.3	179.3
48		6	53.3	121.4	53.3	177.3	53.3	121.4	53.3	179.3
60		6	53.3	121.4	53.3	159.6	53.3	121.4	53.3	179.3
72		6	53.3	121.4	53.3	133.0	53.3	121.4	53.3	179.3
24	36	4	53.3	121.4	53.3	177.3	53.3	121.4	53.3	179.3
36		4	53.3	118.2	53.3	118.2	53.3	121.4	53.3	179.3
48		6	53.3	118.2	53.3	118.2	53.3	121.4	53.3	157.2
60		6	53.3	106.4	53.3	106.4	53.3	121.4	53.3	143.7
72		6	53.3	88.7	53.3	88.7	53.3	101.6	53.3	139.7
24	48	4	53.3	121.4	53.3	133.0	53.3	121.4	53.3	179.3
36		4	53.3	88.7	53.3	88.7	53.3	121.4	53.3	129.0
48		6	53.3	88.7	53.3	88.7	53.3	104.8	53.3	104.8
60		6	53.3	79.8	53.3	79.8	53.3	88.8	53.3	91.5
72		6	53.3	66.5	53.3	66.5	53.3	73.0	53.3	83.8
24	60	4	53.3	106.4	53.3	106.4	53.3	121.4	53.3	139.7
36		4	53.3	70.9	53.3	70.9	53.3	98.6	53.3	98.6
48		6	53.3	70.9	53.3	70.9	53.3	78.6	53.3	78.6
60		6	53.3	63.8	53.3	63.8	53.3	67.1	53.3	67.1
72		6	53.3	53.2	53.3	53.2	53.3	56.9	53.3	59.9
19-1/8	26	4	53.3	121.4	53.3	179.3	53.3	121.4	53.3	179.3
26-1/2		4	53.3	121.4	53.3	179.3	53.3	121.4	53.3	179.3
37		4	53.3	121.4	53.3	159.3	53.3	121.4	53.3	179.3
53-1/8		6	53.3	121.4	53.3	159.3	53.3	121.4	53.3	179.3
74		6	53.3	119.5	53.3	119.5	53.3	121.4	53.3	179.3
19-1/8	38-3/8	4	53.3	121.4	53.3	179.3	53.3	121.4	53.3	179.3
26-1/2		4	53.3	121.4	53.3	150.7	53.3	121.4	53.3	179.3
37		4	53.3	107.9	53.3	107.9	53.3	121.4	53.3	168.1
53-1/8		6	53.3	107.9	53.3	107.9	53.3	121.4	53.3	135.9
74		6	53.3	80.9	53.3	80.9	53.3	91.6	53.3	123.1
19-1/8	50-5/8	4	53.3	121.4	53.3	158.2	53.3	121.4	53.3	179.3
26-1/2		4	53.3	114.2	53.3	114.2	53.3	121.4	53.3	155.3
37		4	53.3	81.8	53.3	81.8	53.3	118.3	53.3	118.3
53-1/8		6	53.3	81.8	53.3	81.8	53.3	91.3	53.3	91.3
74		6	53.3	61.3	53.3	61.3	53.3	66.7	53.3	76.2
19-1/8	63	4	53.3	121.4	53.3	127.2	53.3	121.4	53.3	162.7
26-1/2		4	53.3	91.8	53.3	91.8	53.3	121.2	53.3	121.2
37		4	53.3	65.7	53.3	65.7	53.3	91.1	53.3	91.1
53-1/8		6	53.3	65.7	53.3	65.7	53.3	68.6	53.3	68.6
74		6	52.4	49.3	53.3	49.3	52.4	52.4	53.3	55.0

A = NO. OF ANCHORS PER HEAD/SILL

Engr: DR. HUMAYOUN FAROOQ
STRUCTURES
FLA. PE # 16557

DEC 1 4 2000

APPROVED AS COMPLYING WITH THE
SOUTH FLORIDA BUILDING CODE
DATE January 04, 2001
BY Manuel Perez
PRODUCT CONTROL DIVISION
BUILDING CODE COMPLIANCE OFFICE
ACCEPTANCE NO. 00-1107.02

AL-FAROOQ CORPORATION
ENGINEERS, PLANNERS & PRODUCT DESIGN
1235 SW 87 AVE
MIAMI, FLORIDA 33174
TEL. (305) 264-8100 FAX. (305) 262-6978

COMP-ANL\W00-47PW

SERIES-300 ALUM HORIZ. SLIDING WINDOW

PINO WINDOWS CORPORATION
6860 N.W. 75TH STREET
MEDLEY, FL. 33166
TEL. (305) 888-9946 FAX (305) 888-8079

revisions:

no	date	by	description

date: 10-27-00
scale: 1/2" = 1"
dr. by: HAMID
chk. by:

drawing no.
W00-47

sheet 3 of 8

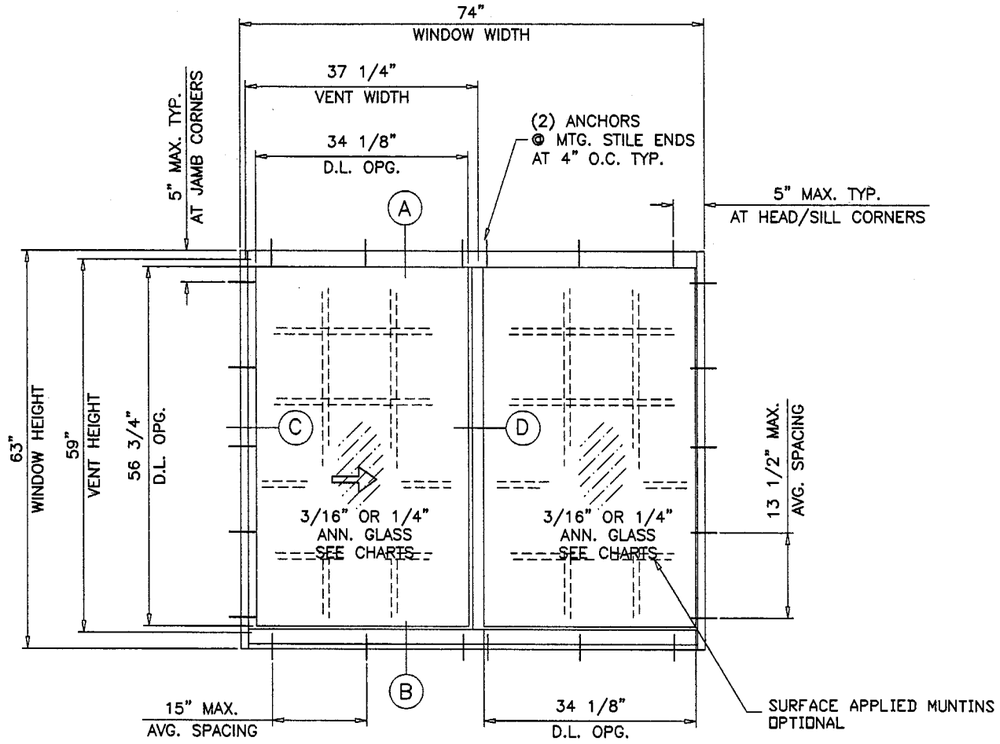

TYPICAL ELEVATION
TESTED UNIT
GLASS WIDTHS TO BE EQUAL ON MOVING AND FIXED LITES

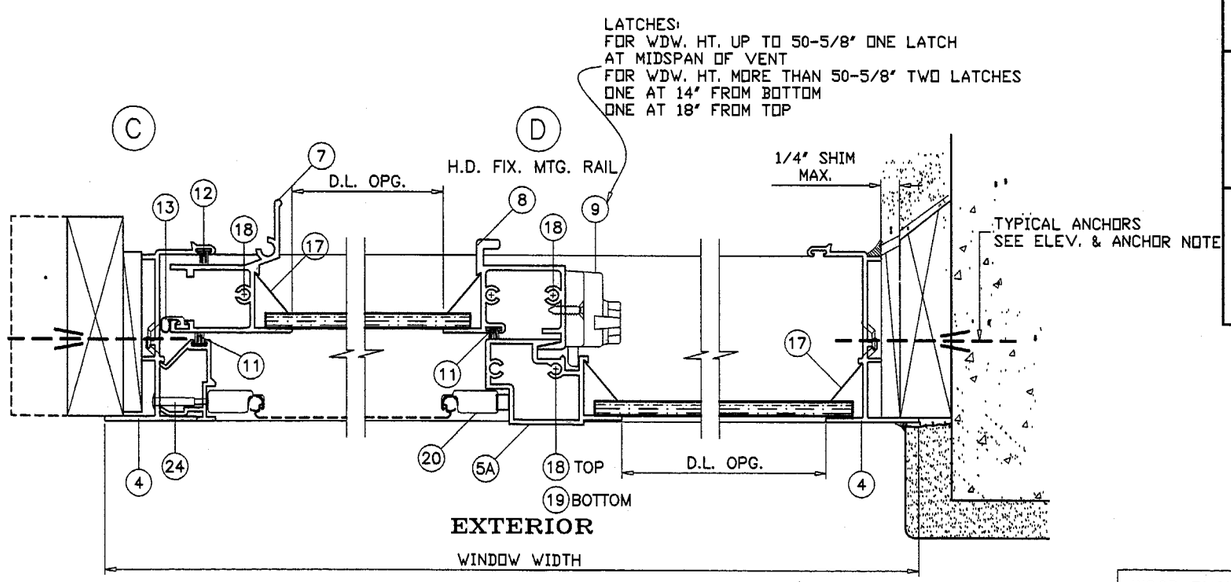

XO LAYOUT
OX OPPOSITE

DESIGN LOAD CAPACITY - PSF (XO OR OX SIZES)
WINDOWS WITH HI-RISE SILL

WINDOW DIMS. INCHES		A	3/16" TAPCONS				1/4" TAPCONS			
			3/16"-ANN. GLASS		1/4"-ANN. GLASS		3/16"-ANN. GLASS		1/4"-ANN. GLASS	
WIDTH	HEIGHT		EXT. (+)	INT. (-)	EXT. (+)	INT. (-)	EXT. (+)	INT. (-)	EXT. (+)	INT. (-)
24	24	4	65.0	121.4	65.0	179.3	65.0	121.4	65.0	179.3
36		4	65.0	121.4	65.0	177.3	65.0	121.4	65.0	179.3
48		6	65.0	121.4	65.0	177.3	65.0	121.4	65.0	179.3
60		6	65.0	121.4	65.0	159.6	65.0	121.4	65.0	179.3
72		6	65.0	121.4	65.0	133.0	65.0	121.4	65.0	179.3
24	36	4	65.0	121.4	65.0	177.3	65.0	121.4	65.0	179.3
36		4	65.0	118.2	65.0	118.2	65.0	121.4	65.0	179.3
48		6	65.0	118.2	65.0	118.2	65.0	121.4	65.0	157.2
60		6	65.0	106.4	65.0	106.4	65.0	121.4	65.0	143.7
72		6	65.0	88.7	65.0	88.7	65.0	101.6	65.0	139.7
24	48	4	65.0	121.4	65.0	133.0	65.0	121.4	65.0	179.3
36		4	65.0	88.7	65.0	88.7	65.0	121.4	65.0	129.0
48		6	65.0	88.7	65.0	88.7	65.0	104.8	65.0	104.8
60		6	65.0	79.8	65.0	79.8	65.0	88.8	65.0	91.5
72		6	65.0	66.5	65.0	66.5	65.0	73.0	65.0	83.8
24	60	4	65.0	106.4	65.0	106.4	65.0	121.4	65.0	139.7
36		4	65.0	70.9	65.0	70.9	65.0	98.6	65.0	98.6
48		6	65.0	70.9	65.0	70.9	65.0	78.6	65.0	78.6
60		6	65.0	63.8	65.0	63.8	65.0	67.1	65.0	67.1
72		6	56.9	53.2	59.9	53.2	56.9	56.9	59.9	59.9
19-1/8	26	4	65.0	121.4	65.0	179.3	65.0	121.4	65.0	179.3
26-1/2		4	65.0	121.4	65.0	179.3	65.0	121.4	65.0	179.3
37		4	65.0	121.4	65.0	159.3	65.0	121.4	65.0	179.3
53-1/8		6	65.0	121.4	65.0	159.3	65.0	121.4	65.0	179.3
74		6	65.0	119.5	65.0	119.5	65.0	121.4	65.0	179.3
19-1/8	38-3/8	4	65.0	121.4	65.0	179.3	65.0	121.4	65.0	179.3
26-1/2		4	65.0	121.4	65.0	150.7	65.0	121.4	65.0	179.3
37		4	65.0	107.9	65.0	107.9	65.0	121.4	65.0	168.1
53-1/8		6	65.0	107.9	65.0	107.9	65.0	121.4	65.0	135.9
74		6	65.0	80.9	65.0	80.9	65.0	91.6	65.0	123.1
19-1/8	50-5/8	4	65.0	121.4	65.0	158.2	65.0	121.4	65.0	179.3
26-1/2		4	65.0	114.2	65.0	114.2	65.0	121.4	65.0	155.3
37		4	65.0	81.8	65.0	81.8	65.0	118.3	65.0	118.3
53-1/8		6	65.0	81.8	65.0	81.8	65.0	91.3	65.0	91.3
74		6	65.0	61.3	65.0	61.3	65.0	66.7	65.0	76.2
19-1/8	63	4	65.0	121.4	65.0	127.2	65.0	121.4	65.0	162.7
26-1/2		4	65.0	91.8	65.0	91.8	65.0	121.2	65.0	121.2
37		4	65.0	65.7	65.0	65.7	65.0	91.1	65.0	91.1
53-1/8		6	65.0	65.7	65.0	65.7	65.0	68.6	65.0	68.6
74		6	52.4	49.3	55.0	49.3	52.4	52.4	55.0	55.0

A = NO. OF ANCHORS PER HEAD/SILL

WOOD BUCKS NOT BY PINO WINDOWS, MUST SUSTAIN LOADS IMPOSED BY GLAZING SYSTEM AND TRANSFER THEM TO THE BUILDING STRUCTURE.

Engr: DR. HUMAYOUN FAROOQ
STRUCTURES
FLA. PE # 16557

DEC 1 4 2000

APPROVED AS COMPLYING WITH THE SOUTH FLORIDA BUILDING CODE
DATE January 04, 2001
BY M. Hamid Perez
PRODUCT CONTROL DIVISION
BUILDING CODE COMPLIANCE OFFICE
ACCEPTANCE NO. 00-1107.02

AL-FAROOQ CORPORATION
ENGINEERS, PLANNERS & PRODUCT DESIGN
1235 SW 87 AVE
MIAMI, FLORIDA 33174
TEL. (305) 264-8100 FAX. (305) 262-6978
COMP-ANL\W00-47PW

SERIES-300 ALUM HORIZ. SLIDING WINDOW

PINO WINDOWS CORPORATION
6860 N.W. 75TH STREET
MEDLEY, FL. 33166
TEL. (305) 888-8079 FAX (305) 888-9946

revisions:

no	date	by	description

date: 10-27-00
scale: 1/2" = 1"
dr. by: HAMID
chk. by:

drawing no.
W00-47

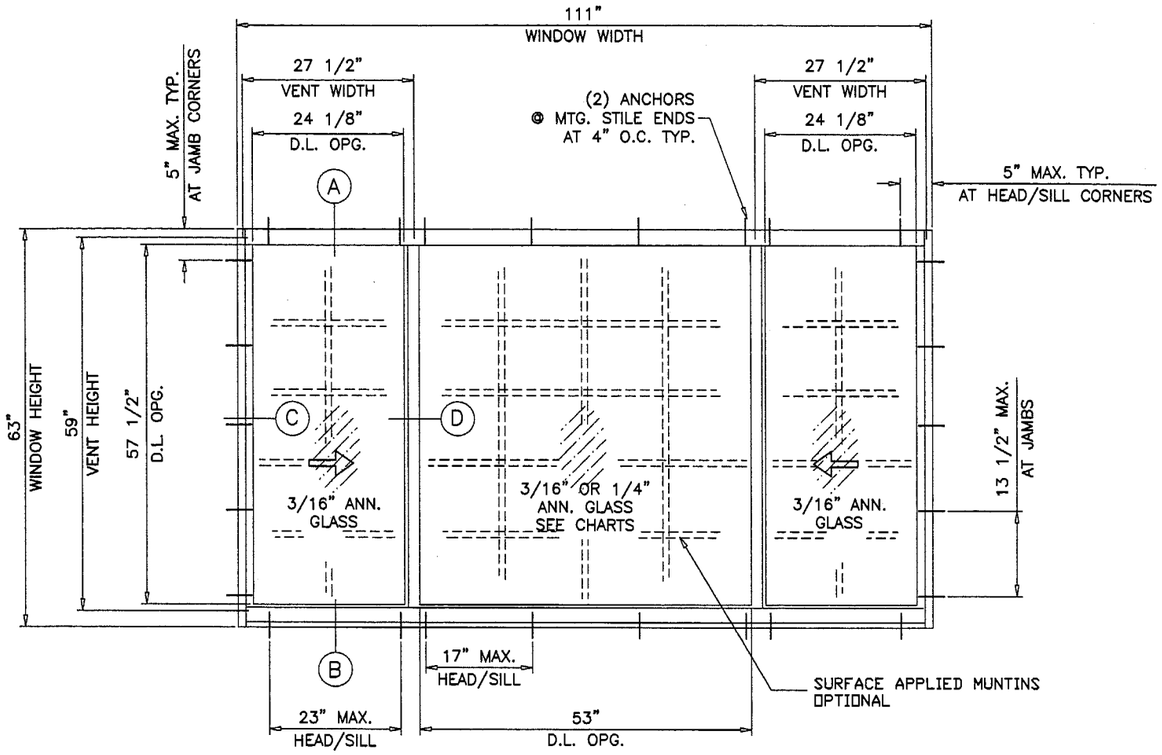

TYPICAL ELEVATION
TESTED UNIT

GLASS WIDTH OF FIXED LITE ±1/2 OF WINDOW WIDTH

DESIGN LOAD CAPACITY - PSF (XOX SIZES)
WINDOWS WITH STANDARD SILL

WINDOW DIMS. INCHES		A	3/16" TAPCONS				1/4" TAPCONS			
			3/16"-ANN. GLASS		1/4"-ANN. GLASS		3/16"-ANN. GLASS		1/4"-ANN. GLASS	
WIDTH	HEIGHT		EXT. (+)	INT. (-)	EXT. (+)	INT. (-)	EXT. (+)	INT. (-)	EXT. (+)	INT. (-)
72	24	7	53.3	121.4	53.3	155.2	53.3	121.4	53.3	179.3
84		8	53.3	121.4	53.3	152.0	53.3	121.4	53.3	179.3
96		8	53.3	121.4	53.3	133.0	53.3	121.4	53.3	179.3
108		8	53.3	112.1	53.3	118.2	53.3	112.1	53.3	165.5
111		8	53.3	108.8	53.3	115.0	53.3	108.8	53.3	160.7
72	36	7	53.3	103.4	53.3	103.4	53.3	106.2	53.3	146.4
84		8	53.3	89.5	53.3	101.3	53.3	89.5	53.3	132.2
96		8	53.3	77.3	53.3	88.7	53.3	77.3	53.3	114.2
108		8	53.3	68.1	53.3	78.8	53.3	68.1	53.3	100.6
111		8	53.3	66.1	53.3	76.7	53.3	66.1	53.3	97.7
72	48	7	53.3	76.2	53.3	77.6	53.3	76.2	53.3	93.1
84		8	53.3	64.2	53.3	76.0	53.3	64.2	53.3	86.4
96		8	53.3	55.5	53.3	66.5	53.3	55.5	53.3	82.1
108		8	48.9	48.9	53.3	59.1	48.9	48.9	53.3	72.2
111		8	47.4	47.4	53.3	57.5	47.4	47.4	53.3	70.1
72	60	7	53.3	59.4	53.3	62.1	53.3	59.4	53.3	68.3
84		8	50.1	50.1	53.3	60.8	50.1	50.1	53.3	62.0
96		8	43.3	43.3	53.3	53.2	43.3	43.3	53.3	57.6
108		8	38.1	38.1	53.3	47.3	38.1	38.1	53.3	54.6
111		8	37.0	37.0	53.3	46.0	37.0	37.0	53.3	54.1
74	26	7	53.3	121.4	53.3	139.4	53.3	121.4	53.3	179.3
106-1/4		8	53.3	103.0	53.3	110.9	53.3	103.0	53.3	152.1
111		8	53.3	98.2	53.3	106.2	53.3	98.2	53.3	145.1
74	38-3/8	7	53.3	94.4	53.3	94.4	53.3	95.5	53.3	130.3
106-1/4		8	53.3	64.3	53.3	75.2	53.3	64.3	53.3	95.0
111		8	53.3	61.3	53.3	71.9	53.3	61.3	53.3	90.6
74	50-5/8	7	53.3	69.6	53.3	71.6	53.3	69.6	53.3	84.9
106-1/4		8	46.8	46.8	53.3	57.0	46.8	46.8	53.3	69.3
111		8	44.7	44.7	53.3	54.5	44.7	44.7	53.3	66.1
74	63	7	53.3	54.6	53.3	57.5	53.3	54.6	53.3	62.9
106-1/4		8	36.8	36.8	51.0	45.8	36.8	36.8	51.0	51.0
111		8	35.1	35.1	50.0	43.8	35.1	35.1	50.0	50.0

A = NO. OF ANCHORS PER HEAD/SILL

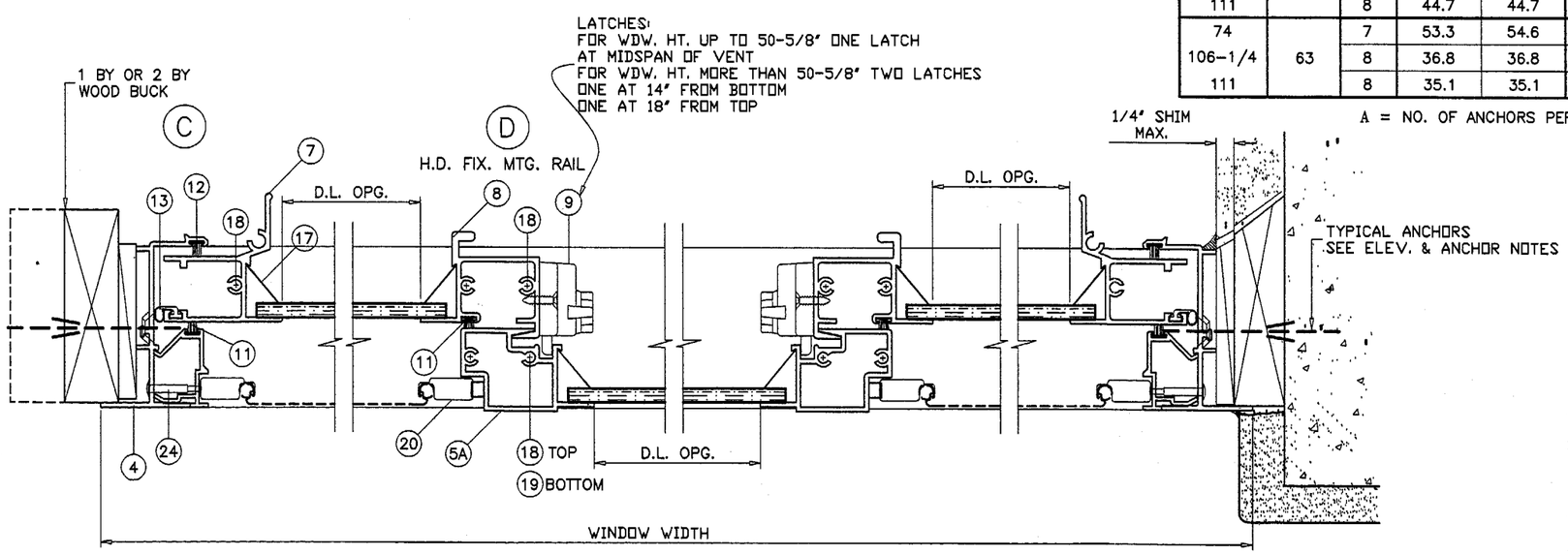

XOX LAYOUT
EXTERIOR

Engr: DR. HUMAYOUN FAROOQ
STRUCTURES
FLA. PE # 16557

DEC 14 2000

APPROVED AS COMPLYING WITH THE
SOUTH FLORIDA BUILDING CODE
DATE January 04, 2001
BY Mamud Sanz
PRODUCT CONTROL DIVISION
BUILDING CODE COMPLIANCE OFFICE
ACCEPTANCE NO. 00-1107.02

AL-FAROOQ CORPORATION
ENGINEERS, PLANNERS & PRODUCT DESIGN
1235 SW 87 AVE
MIAMI, FLORIDA 33174
TEL. (305) 264-8100 FAX. (305) 262-6978
COMP-ANL\WOO-47PW

SERIES-300 ALUM HORIZ. SLIDING WINDOW

PINO WINDOWS CORPORATION
6860 N.W. 75TH STREET
MEDLEY, FL. 33166
TEL. (305) 888-9946 FAX (305) 888-8079

revisions:

no	date	by	description

date: 10-27-00
scale: 1/2" = 1"
dr. by: HAMID
chk. by:

drawing no.
WOO-47

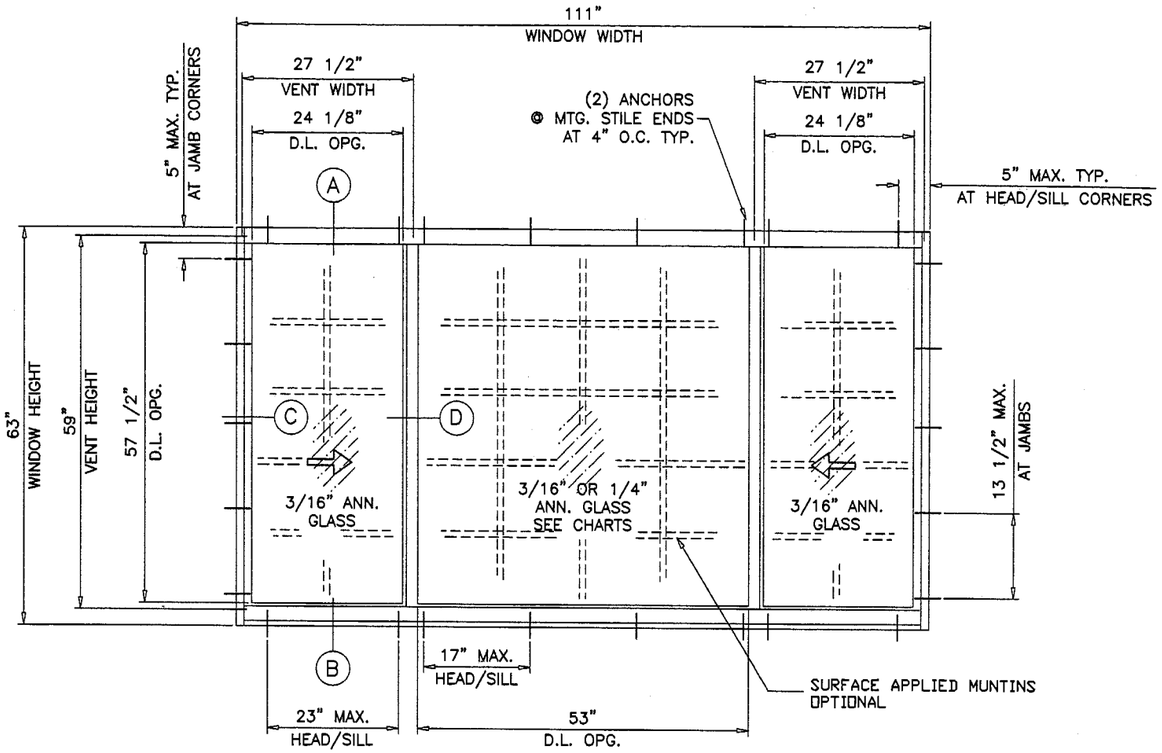

TYPICAL ELEVATION
TESTED UNIT

GLASS WIDTH OF FIXED LITE ±1/2 OF WINDOW WIDTH

DESIGN LOAD CAPACITY - PSF (XOX SIZES)
WINDOWS WITH HI-RISE SILL

WINDOW DIMS. INCHES		A	3/16" TAPCONS				1/4" TAPCONS			
			3/16"-ANN. GLASS		1/4"-ANN. GLASS		3/16"-ANN. GLASS		1/4"-ANN. GLASS	
WIDTH	HEIGHT		EXT. (+)	INT. (−)	EXT. (+)	INT. (−)	EXT. (+)	INT. (−)	EXT. (+)	INT. (−)
72	24	7	62.0	121.4	62.0	155.2	62.0	121.4	62.0	179.3
84		8	62.0	121.4	62.0	152.0	62.0	121.4	62.0	179.3
96		8	62.0	121.4	62.0	133.0	62.0	121.4	62.0	179.3
108		8	62.0	112.1	62.0	118.2	62.0	112.1	62.0	165.5
111		8	62.0	108.8	62.0	115.0	62.0	108.8	62.0	160.7
72	36	7	62.0	103.4	62.0	103.4	62.0	106.2	62.0	146.4
84		8	62.0	89.5	62.0	101.3	62.0	89.5	62.0	132.2
96		8	62.0	77.3	62.0	88.7	62.0	77.3	62.0	114.2
108		8	62.0	68.1	62.0	78.8	62.0	68.1	62.0	100.6
111		8	62.0	66.1	62.0	76.7	62.0	66.1	62.0	97.7
72	48	7	62.0	76.2	62.0	77.6	62.0	76.2	62.0	93.1
84		8	62.0	64.2	62.0	76.0	62.0	64.2	62.0	86.4
96		8	55.5	55.5	62.0	66.5	55.5	55.5	62.0	82.1
108		8	48.9	48.9	62.0	59.1	48.9	48.9	62.0	72.2
111		8	47.4	47.4	62.0	57.5	47.4	47.4	62.0	70.1
72	60	7	59.4	59.4	62.0	62.1	59.4	59.4	62.0	68.3
84		8	50.1	50.1	62.0	60.8	50.1	50.1	62.0	62.0
96		8	43.3	43.3	57.6	53.2	43.3	43.3	57.6	57.6
108		8	38.1	38.1	54.6	47.3	38.1	38.1	54.6	54.6
111		8	37.0	37.0	54.1	46.0	37.0	37.0	54.1	54.1
74	26	7	62.0	121.4	62.0	139.4	62.0	121.4	62.0	179.3
106-1/4		8	62.0	103.0	62.0	110.9	62.0	103.0	62.0	152.1
111		8	62.0	98.2	62.0	106.2	62.0	98.2	62.0	145.1
74	38-3/8	7	62.0	94.4	62.0	94.4	62.0	95.5	62.0	130.3
106-1/4		8	62.0	64.3	62.0	75.2	62.0	64.3	62.0	95.0
111		8	61.3	61.3	62.0	71.9	61.3	61.3	62.0	90.6
74	50-5/8	7	62.0	69.6	62.0	71.6	62.0	69.6	62.0	84.9
106-1/4		8	46.8	46.8	62.0	57.0	46.8	46.8	62.0	69.3
111		8	44.7	44.7	62.0	54.5	44.7	44.7	62.0	66.1
74	63	7	54.6	54.6	62.0	57.5	54.6	54.6	62.0	62.9
106-1/4		8	36.8	36.8	51.0	45.8	36.8	36.8	51.0	51.0
111		8	35.1	35.1	50.0	43.8	35.1	35.1	50.0	50.0

A = NO. OF ANCHORS PER HEAD/SILL

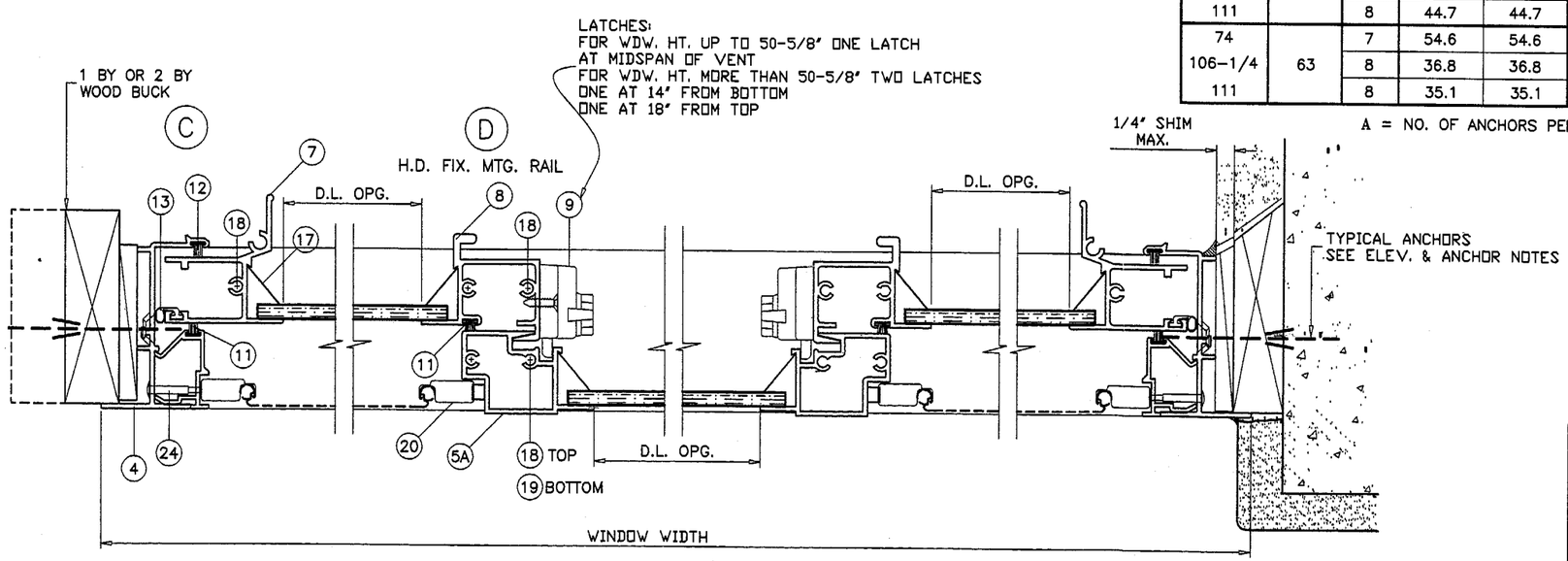

XOX LAYOUT
EXTERIOR

Engr: DR. HUMAYOUN FAROOQ
STRUCTURES
FLA. PE # 16557

DEC 14 2000

APPROVED AS COMPLYING WITH THE
SOUTH FLORIDA BUILDING CODE
DATE January 04, 2001
BY Manuel Perez
PRODUCT CONTROL DIVISION
BUILDING CODE COMPLIANCE OFFICE
ACCEPTANCE NO. 00-1107.02

AL-FAROOQ CORPORATION
ENGINEERS, PLANNERS & PRODUCT DESIGN
1235 SW 87 AVE
MIAMI, FLORIDA 33174
TEL. (305) 264-8100 FAX. (305) 262-6978

COMP-ANL\W00-47PW

SERIES-300 ALUM HORIZ. SLIDING WINDOW

PINO WINDOWS CORPORATION
6860 N.W. 75TH STREET
MEDLEY, FL. 33166
TEL (305) 888-9946 FAX (305) 888-8079

revisions:

no	date	by	description

date: 10-27-00
scale: 1/2" = 1'
dr. by: HAMID
chk. by:

drawing no.
W00-47

sheet 6 of 8

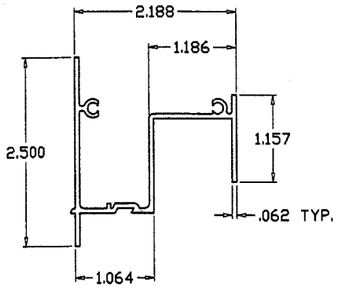

FRAME HEAD

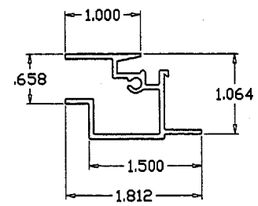

STD. FIXED MTG. RAIL

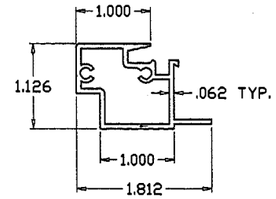

H.D. FIXED MTG. RAIL

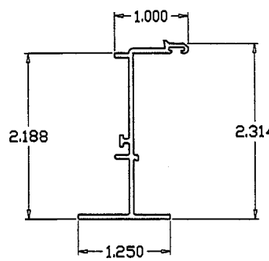

FRAME JAMB

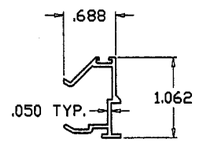

SCREEN ADAPTER

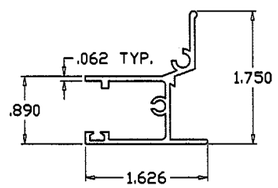

JAMB STILE

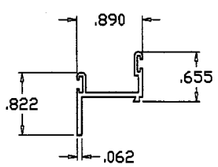

VENT TOP/BOTTOM RAIL

MEETING RAIL

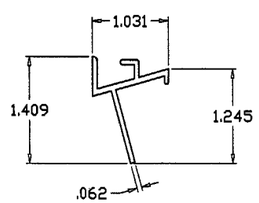

HI-RISE SILL TRACK

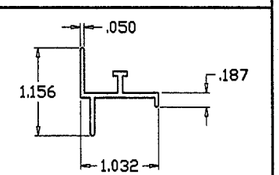

STD. SILL TRACK

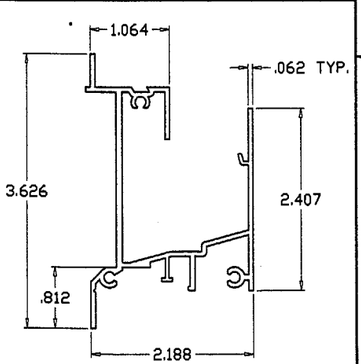

HI-RISE SILL

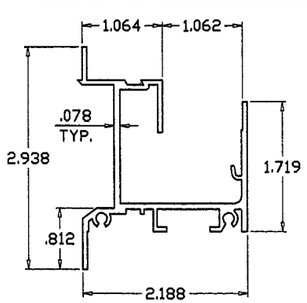

STANDARD SILL

ITEM	PART #	QUANTITY	DESCRIPTION	MATERIAL	MANF./SUPPLIER/REMARKS
1	PDH-503	1	FRAME HEAD	6063-T5	ALUMAX/BONNELL
2	PHS-606	1	HI-RISE FRAME SILL	6063-T5	ALUMAX/BONNELL
2A	PHS-601	1	STD. FRAME SILL	6063-T5	ALUMAX/BONNELL
3	PHS-607	1	HI-RISE SILL TRACK	6063-T5	ALUMAX/BONNELL
3A	26022	1	STANDARD SILL TRACK	6063-T5	ALUMAX/BONNELL
4	PHS-603	2	FRAME JAMB	6063-T5	ALUMAX/BONNELL
5	PDH-504	1/ VENT	STD. FIXED MEETING RAIL	6063-T5	ALUMAX/BONNELL
5A	PDH-525	1/ VENT	H.D. FIXED MEETING RAIL	–	–
6	PDH-507	2/ VENT	TOP AND BOTTOM RAIL	6063-T5	ALUMAX/BONNELL
7	PDH-527	1/ VENT	JAMB STILE	6063-T5	ALUMAX/BONNELL
8	PDH-508	1/ VENT	INTERLOCK STILE	6063-T5	ALUMAX/BONNELL
9	8725/000	AS REQD.	METALLIC CAM LOCK (ZINC DIE CAST)	ZAMAK	ALLEN STEVENS
10	PHS-604	AS REQD.	SCREEN ADAPTER	6063-T5	–
11	FS-7118-187	AS REQD.	TOP & BOTTOM RAIL WEATHERSTRIPPING	–	SCHLEGEL FIN SEAL OR EQ.
12	PB-8327-187	AS REQD.	JAMB STILE WEATHERSTRIPPING	–	SCHLEGEL OR EQ.
13	–	AS REQD.	BULB WEATHERSTRIPPING	VINYL	–
14	PHS-605	2/ VENT	ROLLER HOUSING	NYLON	M&M PLASTICS
15	–	2/ VENT	WHEEL	ST. STEEL	–
16	–	2/ VENT	ROLLER PIN	ST. STEEL	–
17	PDH-515	AS REQD.	GLAZING BEAD	ALUMINUM	ROLL FORMED
18	–	AS REQD.	ASSEMBLY SCREWS (FRAME & VENT)	PL. CRS	# 8 X 3/4" PH SMS
19	–	1/ VENT	MEETING RAIL SILL SCREW (BOTTOM)	PL. CRS	# 8 X 3-1/4" PH SMS
20	–	1/ VENT	5/16" BOX SCREEN	–	WARREN IND. OR EQUAL
21	PHS-604	1/ VENT	SCREEN ADAPTER	6063-T5	–
22	–	2/ WINDOW	BAFFLE	NYLON	M&M PLASTICS
23	PHS-604	2/ BAFFLE	BAFFLE SCREWS	–	# 6 X 3/8" PH SMS
24	–	2/ ADAPTER	#8-32 X 1/2" POST BINDING SCREWS	PL. CRS	–

Engr: DR. HUMAYOUN FAROOQ
STRUCTURES
FLA. PE # 16557

DEC 14 2000

APPROVED AS COMPLYING WITH THE
SOUTH FLORIDA BUILDING CODE
DATE January 04, 2001
BY Manuel Diaz
PRODUCT CONTROL DIVISION
BUILDING CODE COMPLIANCE OFFICE
ACCEPTANCE NO. 00-1107.02

AL-FAROOQ CORPORATION
ENGINEERS, PLANNERS & PRODUCT DESIGN
1235 SW 87 AVE
MIAMI, FLORIDA 33174
TEL. (305) 264-8100 FAX. (305) 262-6978
COMP-ANL\W00-47PW

SERIES-300 ALUM HORIZ. SLIDING WINDOW

PINO WINDOWS CORPORATION
6860 N.W. 75TH STREET
MEDLEY, FL. 33166
TEL (305) 888-9946 FAX (305) 888-8079

revisions:

no	date	by	description

date: 10-27-00
scale: 1/2" = 1"
dr. by: HAMID
chk. by:

drawing no.
W00-47

sheet 7 of 8

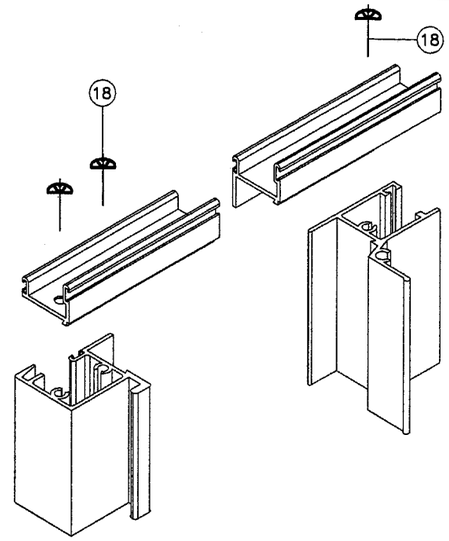

VENT TOP/BOTTOM CORNERS

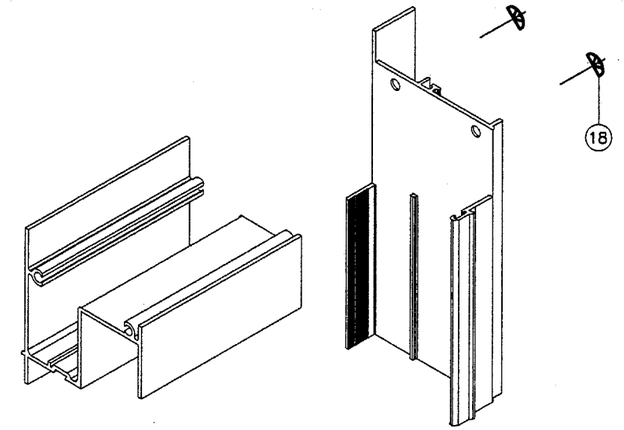

FRAME TOP CORNER

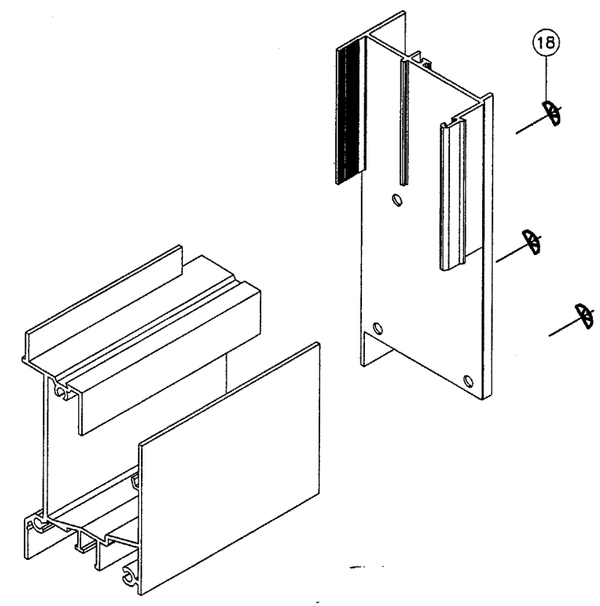

FRAME BOTTOM CORNER

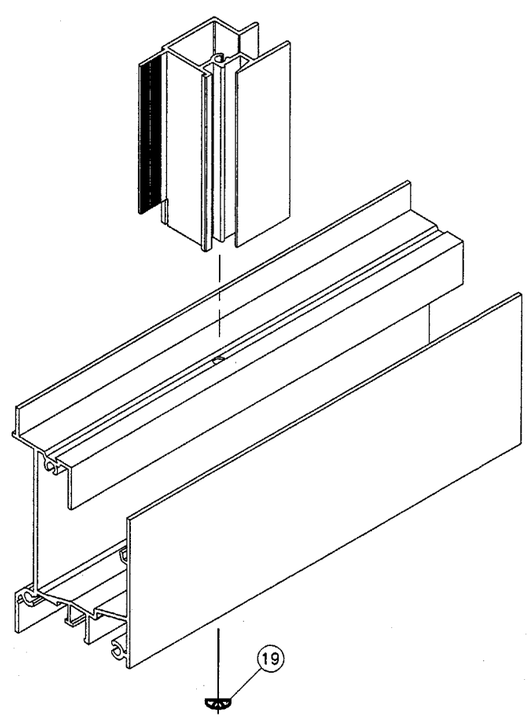

FIXED MTG. RAIL CORNER

Engr: DR. HUMAYOUN FAROOQ
STRUCTURES
FLA. PE # 16557

DEC 14 2000

APPROVED AS COMPLYING WITH THE
SOUTH FLORIDA BUILDING CODE
DATE January 04, 2001
BY Manuel Diaz
PRODUCT CONTROL DIVISION
BUILDING CODE COMPLIANCE OFFICE
ACCEPTANCE NO. 00-1107.02

AL-FAROOQ CORPORATION
ENGINEERS, PLANNERS & PRODUCT DESIGN
1235 SW 87 AVE
MIAMI, FLORIDA 33174
TEL. (305) 264-8100 FAX. (305) 262-6978

COMP-ANL\WOO-47PW

SERIES-300 ALUM HORIZ. SLIDING WINDOW

PINO WINDOWS CORPORATION
6860 N.W. 75TH STREET
MEDLEY, FL. 33166
TEL. (305) 888-9946 FAX (305) 888-8079

revisions:			
no	date	by	description

date: 10-27-00
scale: 1/2" = 1"
dr. by: HAMID
chk. by:

drawing no.
WOO-47

sheet 8 of 8