MIAMI-DADE

MIAMI-DADE COUNTY, FLORIDA
METRO-DADE FLAGLER BUILDING

BUILDING CODE COMPLIANCE OFFICE
METRO-DADE FLAGLER BUILDING
140 WEST FLAGLER STREET, SUITE 1603
MIAMI, FLORIDA 33130-1563
(305) 375-2901 FAX (305) 375-2908

CONTRACTOR LICENSING SECTION
(305) 375-2527 FAX (305) 375-2558

CONTRACTOR ENFORCEMENT DIVISION
(305) 375-2966 FAX (305) 375-2908

PRODUCT CONTROL DIVISION
(305) 375-2902 FAX (305) 372-6339

PRODUCT CONTROL NOTICE OF ACCEPTANCE

Shutter Guard
10601 Oak Street, N.E.
St. Petersburg ,FL 33716

Your application for Notice of Acceptance (NOA) of:
Extruded Aluminum Roll-Up Shutters
under Chapter 8 of the Code of Miami-Dade County governing the use of Alternate Materials and Types of Construction, and completely described herein, has been recommended for acceptance by the Miami-Dade County Building Code Compliance Office (BCCO) under the conditions specified herein.

This NOA shall not be valid after the expiration date stated below. BCCO reserves the right to secure this product or material at any time from a jobsite or manufacturer's plant for quality control testing. If this product or material fails to perform in the approved manner, BCCO may revoke, modify, or suspend the use of such product or material immediately. BCCO reserves the right to revoke this approval, if it is determined by BCCO that this product or material fails to meet the requirements of the South Florida Building Code.

The expense of such testing will be incurred by the manufacturer.

ACCEPTANCE NO.: 00-1121.05
EXPIRES: 02/19/2006

Raul Rodriguez
Chief Product Control Division

THIS IS THE COVERSHEET, SEE ADDITIONAL PAGES FOR SPECIFIC AND GENERAL CONDITIONS
BUILDING CODE & PRODUCT REVIEW COMMITTEE

This application for Product Approval has been reviewed by the BCCO and approved by the Building Code and Product Review Committee to be used in Miami-Dade County, Florida under the conditions set forth above.

Francisco J. Quintana, R.A.
Director
Miami-Dade County
Building Code Compliance Office

APPROVED: 02/01/2001

Shutter Guard.

ACCEPTANCE NO: 00-1121.05

APPROVED: FEB 0 1 2001

EXPIRES: 02/19/2006

NOTICE OF ACCEPTANCE: SPECIFIC CONDITIONS

1 SCOPE:

1.1 This renews the Notice of Acceptance No. 98-0113.04 that was issued on 02/19/98. It approves an extruded aluminum roll-up type shutter, as described in Section 2 of this Notice of Acceptance, designed to comply with the South Florida Building Code, (S.F.B.C.) 1994 Edition for Miami-Dade County. For the locations where the pressure requirements, as determined by S.F.B.C. Chapter 23, do not exceed the design pressure rating values indicated in the approved drawings.

2 PRODUCT DESCRIPTION:

2.1 The **Extruded Aluminum Roll-Up Shutter** and its components shall be constructed in strict compliance with the following documents: Drawing No. **96-283**, Sheets 1 through 12 of 12, titled "Roll-Up Shutter", prepared by Tilteco, Inc., dated 09/09/96, with no revisions. It is signed and sealed by Walter A. Tillit Jr. PE.bearing the Miami-Dade County Product Control approval stamp with the Notice of Acceptance number and approval date. These documents shall herein after be referred to as the approved drawings.

3 LIMITATIONS:

3.1 All permanent set components, included but not limited to embedded anchor bolts, metal shields, headers and sills, must be protected against corrosion, damage and contamination at all times.

3.2 Minimum separation from interior storm bar to existing glass to protect shall be 2".

3.3 Minimum slat engagement inside of sidetrack shall be 1-1/4".

3.4 Slat orientation shall be concave side to the exterior.

4 INSTALLATION:

4.1 The extruded aluminum roll-up shutter and its component shall be installed in strict compliance with the approved drawing

5 LABELING:

5.1 Each unit shall bear a permanent label with the manufacturer's name or logo, city, state and the following statement: "Miami-Dade County Product Control Approved"

6 BUILDING PERMIT REQUIREMENTS:

6.1 Application for Building Permit shall be accompanied by copies of the following:

6.1.1 This Notice of Acceptance

6.1.2 Duplicate copies of the approved drawings, as identified in Section 2 of this Notice of Acceptance, clearly marked to show the components selected for the proposed installation.

6.1.3 Any other document required by the Building Official or the South Florida Building Code in order to evaluate the installation of this system.

Manuel Perez

Manuel Perez, PE., Product Control Examiner
Product Control Division

Shutter Guard.

ACCEPTANCE NO: 00-1121.05

APPROVED: FEB 0 1 2001

EXPIRES: 02/19/2006

NOTICE OF ACCEPTANCE: STANDARD CONDITIONS

1 Renewal of this Acceptance (approval) shall be considered after a renewal application has been filed and the original submitted documents, including test-supporting data, engineering documents, are no older than eight (8) years.

2. Any and all approved products shall be permanently labeled with the manufacturer's name, city, state, and the following statement: "Miami-Dade County Product Control Approval", or as specifically stated in the specific conditions of this Acceptance.

3. Renewals of Acceptance will not be considered if:
   a. There has been a change in the South Florida Building Code affecting the evaluation of this product and the product is not in compliance with the code changes.
   b. The product is no longer the same product (identical) as the one originally approved.
   c. If the Acceptance holder has not complied with all the requirements of this acceptance, including the correct installation of the product.
   d. The engineer who originally prepared, signed and sealed the required documentation initially submitted, is no longer practicing the engineering profession.

4. Any revision or change in the materials, use, and/or manufacture of the product or process shall automatically be cause for termination of this Acceptance, unless prior written approval has been requested (through the filing of a revision application with appropriate fee) and granted by this office.

5. Any of the following shall also be grounds for removal of this Acceptance:
   a. Unsatisfactory performance of this product or process.
   b. Misuse of this Acceptance as an endorsement of any product, for sales, advertising or any other purposes.

6. The Notice of Acceptance number preceded by the words Miami-Dade County, Florida, and followed by the expiration date may be displayed in advertising literature. If any portion of the Notice of Acceptance is displayed, then it shall be done in its entirety.

7. A copy of this Acceptance as well as approved drawings and other documents, where it applies, shall be provided to the user by the manufacturer or its distributors and shall be available for inspection at the job site at all time. The engineer need not reseal the copies.

8. Failure to comply with any section of this Acceptance shall be cause for termination and removal of Acceptance.

9. This Notice of Acceptance consists of pages 1, 2 and this last page 3.

Manuel Perez

Manuel Perez, PE., Product Control Examiner
Product Control Division

END OF THIS ACCEPTANCE

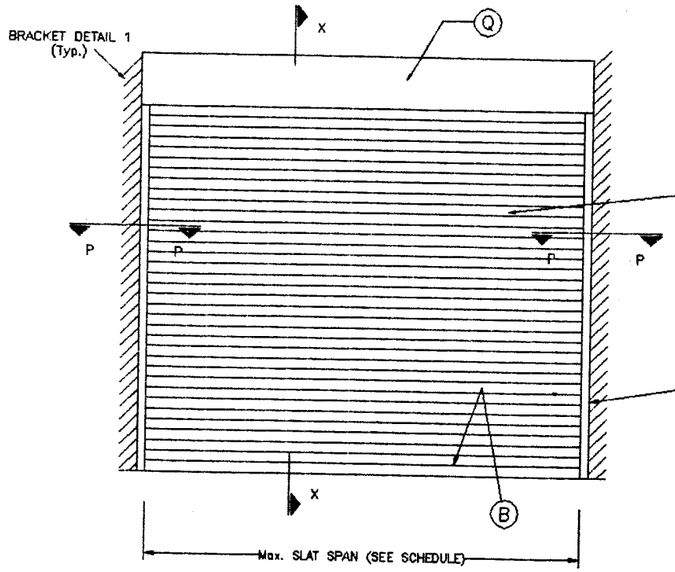

TYPICAL SINGLE UNIT ELEVATION (NO STORM BARS REQUIRED)

NOTE: SEE SHEET 2 & 3 OF 12 FOR COMPONENTS NOMENCLATURE.
SEE SECTIONS ON SHEETS 4, 5, 6, 7 & 8 OF 12.

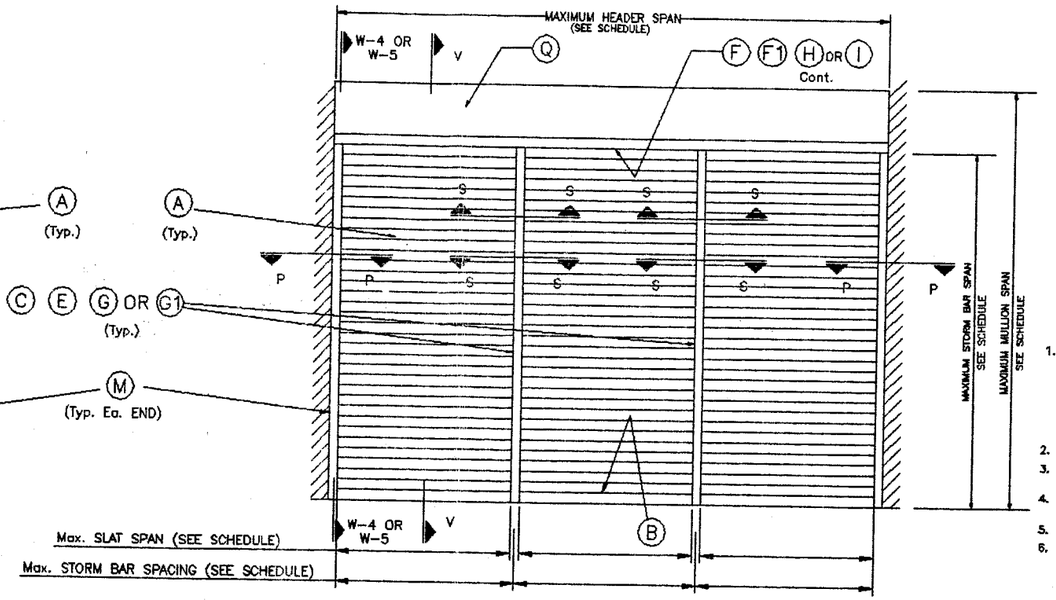

TYPICAL MULTIPLE UNIT ELEVATION (STORM BARS REQUIRED)

NOTE: SEE SHEET 2 & 3 OF 12 FOR COMPONENTS NOMENCLATURE.
SEE SECTIONS ON SHEETS 4, 5, 6, 7 & 8 OF 12.

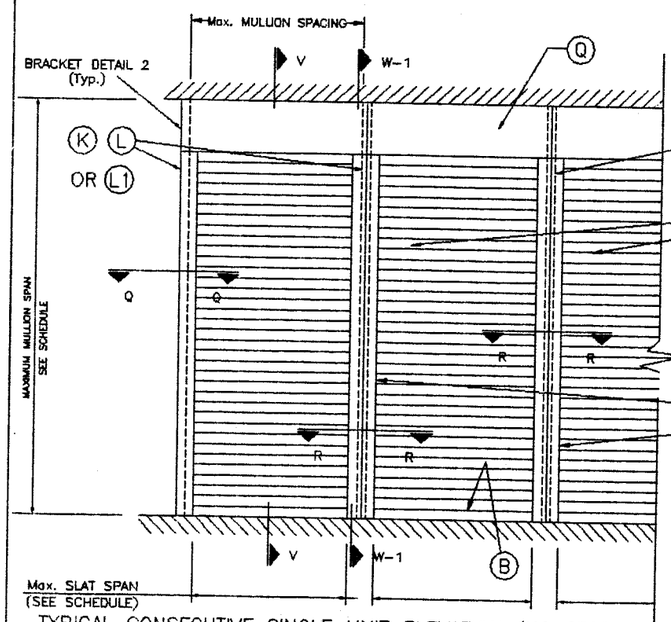

TYPICAL CONSECUTIVE SINGLE UNIT ELEVATION (NO STORM BARS REQUIRED)

NOTE: SEE SHEET 2 & 3 OF 12 FOR COMPONENTS NOMENCLATURE.
SEE SECTIONS ON SHEETS 4, 5, 6, 7 & 8 OF 12.

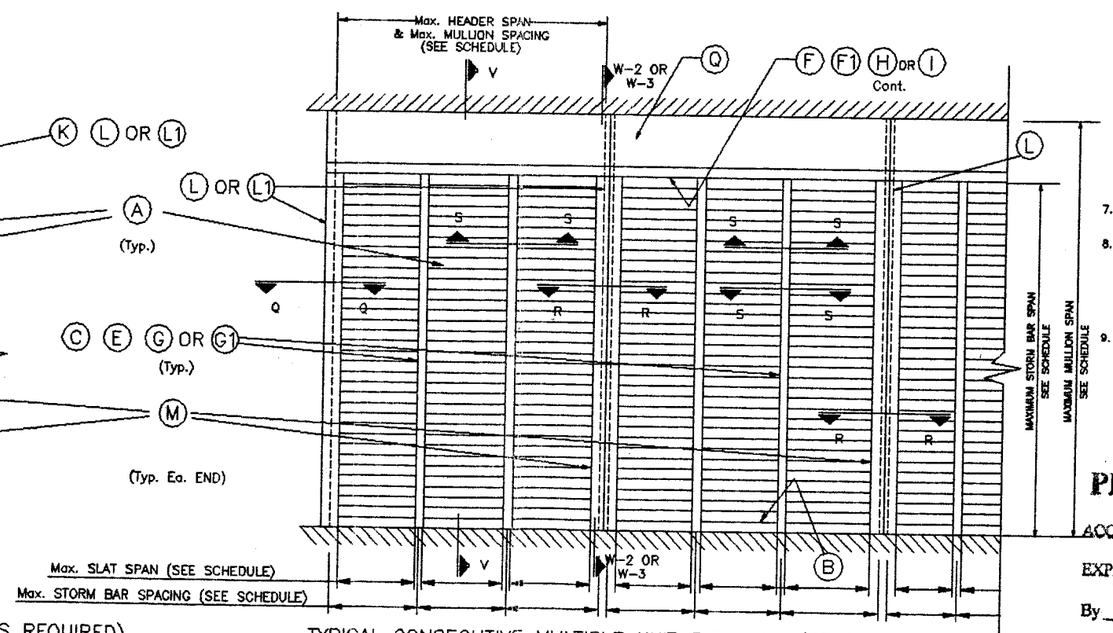

TYPICAL CONSECUTIVE MULTIPLE UNIT ELEVATION (STORM BARS REQUIRED)

NOTE: SEE SHEET 2 & 3 OF 12 FOR COMPONENTS NOMENCLATURE.
SEE SECTIONS ON SHEETS 4, 5, 6, 7 & 8 OF 12.

GENERAL NOTES:

1. ROLL-UP SHUTTER HAS BEEN DESIGNED IN ACCORDANCE WITH THE DADE COUNTY, 1994 EDITION OF THE SOUTH FLORIDA BUILDING CODE.
   WIND VELOCITY CONSIDERED IS 110 m.p.h. IMPORTANCE FACTOR IS 1.05.
   COASTAL ZONE WIND LOADS DETERMINED FOR EXPOSURE "D" FOR BUILDINGS WITH ROOF HEIGHT OVER 60'-0" ONLY, AND FOR EXPOSURE "C" FOR BUILDINGS WITH MEAN ROOF HEIGHT EQUAL OR LESS THAN 60'-0", NON COASTAL ZONE WIND LOADS DETERMINED FOR EXPOSURE "C", AS REQUIRED BY ASCE 7-95.
   ROLL-UP SHUTTER'S ADEQUACY FOR IMPACT AND FATIGUE RESISTANCE HAS BEEN VERIFIED IN ACCORDANCE WITH SECTIONS 2315 & 2314 RESPECTIVELY OF THE ABOVE MENTIONED CODE.
2. ALL ALUMINUM EXTRUSIONS SHALL BE 6063-T6 ALLOY (UNLESS OTHERWISE NOTED).
3. ALL SCREWS TO BE STAINLESS STEEL 304 OR 316 SERIES W/50 ksi YIELD POINT AND 90 ksi TENSILE STRENGTH.
4. BOLTS TO BE 2024-T4 ALUMINUM ALLOY, GALVANIZED OR STAINLESS STEEL WITH 36 ksi MINIMUM YIELD POINT.
5. STORM BARS SHALL REMAIN IN PLACE AT ALL TIMES.
6. ANCHORS TO WALL SHALL BE AS FOLLOWS: (UNLESS OTHERWISE NOTED)
   (A) TO EXISTING POURED CONCRETE:
   - 1/4" ø TAPCON ANCHORS OR RAWL PERMA-SEAL OR S. S. TAPPER CONCRETE ANCHORS, AS MANUFACTURED BY I.T.W./RAMSET, ELCO INDUSTRIES OR THE RAWL PLUG CO., INC, RESPECTIVELY.

   NOTES:
   A.1) MINIMUM EMBEDMENT OF CONCRETE ANCHORS INTO THE CONCRETE UNIT SHALL BE 1 1/2". NO EMBEDMENT INTO STUCCO SHALL BE CONSIDERED AS PART OF THE REQUIRED EMBEDMENT.
   A.2) IN CASE THAT PRECAST STONE, PREDAST CONCRETE PANELS, OR PAVERS BE FOUND ON THE EXISTING WALL OR FLOOR, ANCHORS SHALL BE LONG ENOUGH TO REACH THE MAIN STRUCTURE BEHIND SUCH PANELS. ANCHORAGE SHALL BE 1 1/2" MINIMUM.

   (B) TO EXISTING CONCRETE BLOCK WALL:
   - 1/4" ø TAPCON ANCHORS, AS MANUFACTURED BY I.T.W./RAMSET OR ELCO INDUSTRIES.

   NOTES:
   B.1) MINIMUM EMBEDMENT OF TAPCON ANCHORS, INTO THE CONCRETE BLOCK UNIT SHALL BE 1 1/4".
   B.2) IN CASE THAT PRECAST STONE OR PRECAST CONCRETE PANELS BE FOUND ON THE EXISTING WALL, ANCHORS SHALL BE LONG ENOUGH TO REACH THE MAIN STRUCTURE BEHIND SUCH PANELS. ANCHORAGE SHALL BE 1 1/4" MINIMUM.

   (C) ANCHORS SHALL BE INSTALLED FOLLOWING ALL OF THE RECOMENDATIONS AND SPECIFICATIONS OF THE ANCHOR'S MANUFACTURER.
   (D) ANCHORAGE TO WOOD FRAME BUILDINGS HAS NOT COVERED IN THIS DRAWING & SHALL BE ENGINEERED ON A JOB BY JOB BASIS.
7. IT SHALL BE THE RESPONSIBILITY OF THE CONTRACTOR TO VERIFY THE SOUNDNESS OF THE STRUCTURE WHERE SHUTTER IS TO BE ATTACHED TO INSURE PROPER ANCHORAGE.
8. SHUTTER MANUFACTURER'S STAMP SHALL BE PLACED ON THE EXPOSED SURFACE OF THE SIDE RAIL APROXIMATELY 4" ABOVE THE BOTTOM OF SUCH RAIL. STAMP SHALL READ AS FOLLOWS:
   ROLL-UP SHUTTER
   SHUTTER GUARD
   ST. PETERSBURG, FLORIDA
   DADE COUNTY PRODUCT CONTROL APPROVED.
9. ROLL-UP MECHANISM NOT PART OF THIS APPROVAL.

PRODUCT RENEWED
ACCEPTANCE No. 00-1121.05
EXPIRATION DATE 02/19/2006
By Manuel Perez
PRODUCT CONTROL DIVISION
BUILDING CODE COMPLIANCE OFFICE

PRODUCT RENEWED
ACCEPTANCE No. 98-0113.04
EXPIRATION DATE FEBRUARY 19, 2001
By Manuel Perez
PRODUCT CONTROL DIVISION
BUILDING CODE COMPLIANCE OFFICE

APPROVED AS COMPLYING WITH THE SOUTH FLORIDA BUILDING CODE
DATE OCTOBER 10 1996
BY Manuel Perez
PRODUCT CONTROL DIVISION
BUILDING CODE COMPLIANCE OFFICE
ACCEPTANCE No. 96-0913.02

DADE COUNTY

Walter A. Tillit Jr.
9/10/96

TILTECO INC.
TILLIT TESTING & ENGINEERING COMPANY
6595 N.W. 36th. St., Ste. 217, VIRGINIA GARDENS, FL 33166
Phone : (305)871-1530 . Fax . (305)871-1531
WALTER A. TILLIT Jr., P. E.
FLORIDA Lic. # 44167

ROLL-UP SHUTTER

SHUTTER GUARD
10601 OAK STREET N. E
St. PETERSBURG, FLORIDA 33716

REV. No	DESCRIPTION	DATE	REV. No	DESCRIPTION	DATE
1	–	–	3		
2			4		

SCALE –
DATE 9/9/96
DRAWING No 96 – 283
SHEET 1 OF 12

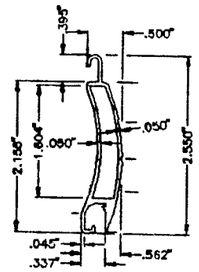

(A) TYPE 1 SLAT:
EXTRUDED ALUMINUM SLAT US 60
6063-T6 ALUMINUM ALLOY

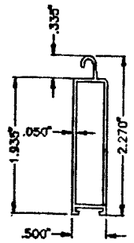

(B) TYPE 2 SLAT:
EXTRUDED ALUMINUM BOTTOM SLAT
6063-T6 ALUMINUM ALLOY

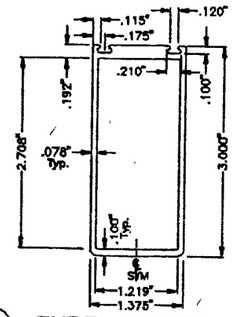

(C) TYPE 1 STORM BAR:
3" EXTRUDED STORM BAR
6061-T6 OR 6005-T5 ALUMINUM ALLOY

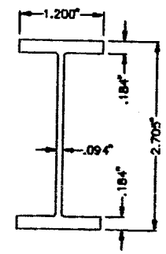

(D) INSERT FOR 1 3/8" x 3" STORM BAR
6005-T5 ALUMINUM ALLOY

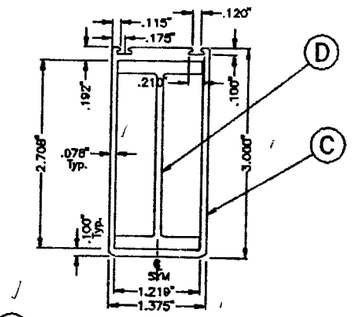

(E) TYPE 2 STORM BAR:
3" EXTRUDED STORM BAR W/ INSERT
6061-T6/6005-T6 ALUMINUM ALLOY (STORM BAR)
6005-T5 ALUMINUM ALLOY (INSERT)

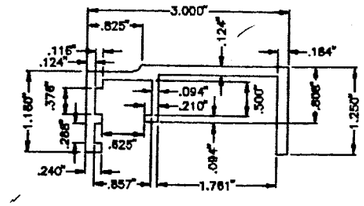

(F) TYPE 1 HEADER CHANNEL
6005-T5 ALUMINUM ALLOY

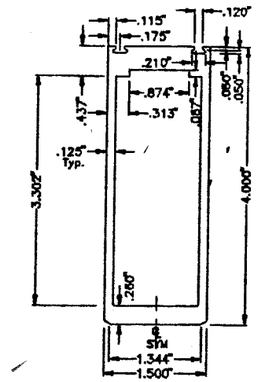

(G) TYPE 3 STORM BAR
4" HEAVY EXTRUDED STORM BAR
6061-T6 OR 6005-T6 ALUMINUM ALLOY

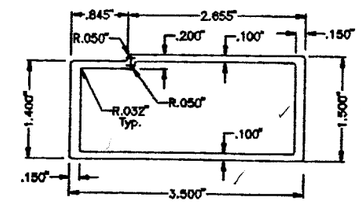

(F1) TYPE 1A HEADER TUBE
6005-T5 ALUMINUM ALLOY

PRODUCT RENEWED
ACCEPTANCE No. 00-1121.05
EXPIRATION DATE 02/19/2006
By Manuel Perez
PRODUCT CONTROL DIVISION
BUILDING CODE COMPLIANCE OFFICE

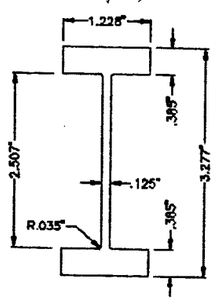

(D1) INSERT FOR 1 1/2" x 4" STORM BAR
6005-T5 ALUMINUM ALLOY

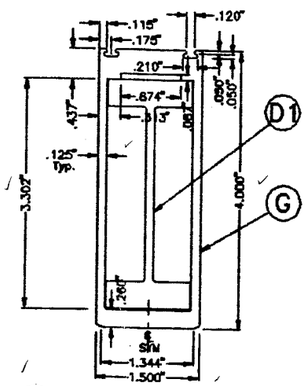

(G1) TYPE 4 STORM BAR
4" HEAVY EXTRUDED STORM BAR W/ INSERT
6061-T6 OR 6005-T6 ALUMINUM ALLOY

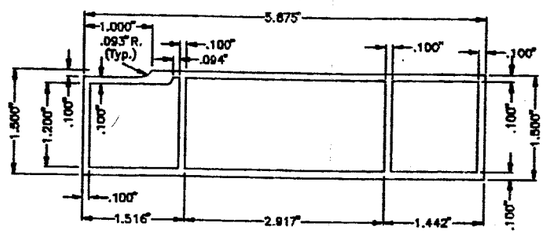

(H) TYPE 2 HEADER TUBE
6005-T5 ALUMINUM ALLOY

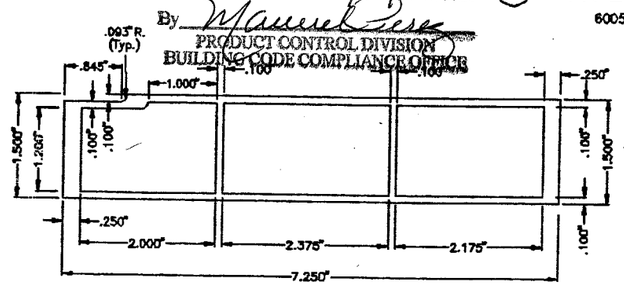

(I) TYPE 3 HEADER TUBE
6005-T5 ALUMINUM ALLOY

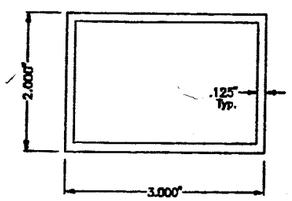

(J) BUILT OUT TUBE
6005-T5 ALUMINUM ALLOY

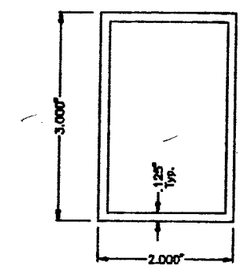

(K) TYPE 1 MULLION
6005-T5 ALUMINUM ALLOY

PRODUCT RENEWED
ACCEPTANCE No. 98-0113.04
EXPIRATION DATE FEBRUARY 19, 2001
By Manuel Perez
PRODUCT CONTROL DIVISION
BUILDING CODE COMPLIANCE OFFICE

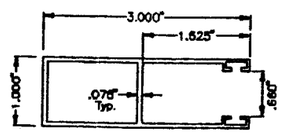

(M) TYPE 1 SIDE RAIL
6063-T6 Alum. ALLOY

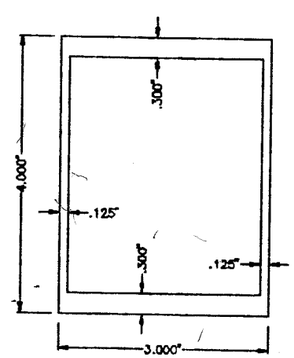

(L) TYPE 2 MULLION
6005-T5 ALUMINUM ALLOY

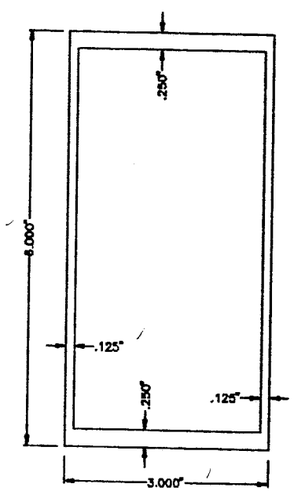

(L1) TYPE 3 MULLION
6061-T6 OR 6005-T5 ALUMINUM ALLOY

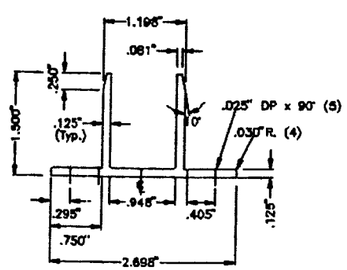

(N) TYPE 1 & 2 STORM BAR BRACKETS
6061-T6 OR 6005-T5 ALUMINUM ALLOY

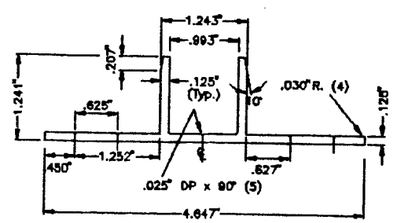

(O) TYPE 3 STORM BAR BRACKET
6061-T6 OR 6005-T5 ALUMINUM ALLOY

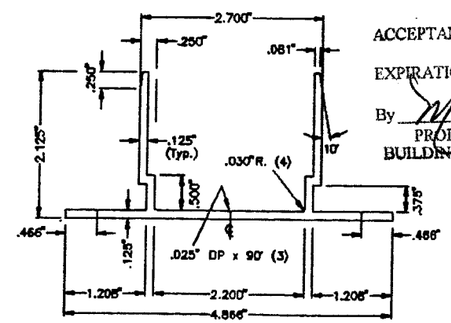

(P) MULLION BRACKET
6061-T6 OR 6005-T5 ALUMINUM ALLOY

APPROVED AS COMPLYING WITH THE SOUTH FLORIDA BUILDING CODE
DATE OCTOBER 10 19 96
BY Manuel Perez
PRODUCT CONTROL DIVISION
BUILDING CODE COMPLIANCE OFFICE
ACCEPTANCE NO. 96-0913.02

Walter A. Tillit
9/10/96

DADE COUNTY

TILTECO INC.
TILLIT TESTING & ENGINEERING COMPANY
8595 N.W. 38th. St., Ste. 217, VIRGINIA GARDENS, FL 33166
Phone : (305)871-1530 . Fax : (305)871-1531
WALTER A. TILLIT Jr., P. E.
FLORIDA Lic. # 44167

ROLL-UP SHUTTER

SHUTTER GUARD
10801 OAK STREET N. E.
St. PETERSBURG, FLORIDA 33716

REV. No	DESCRIPTION	DATE	REV. No	DESCRIPTION	DATE
1	-	-	3		
2			4		

SCALE -
DATE 9/9/96
DRAWING No 96 - 283
SHEET 2 OF 12

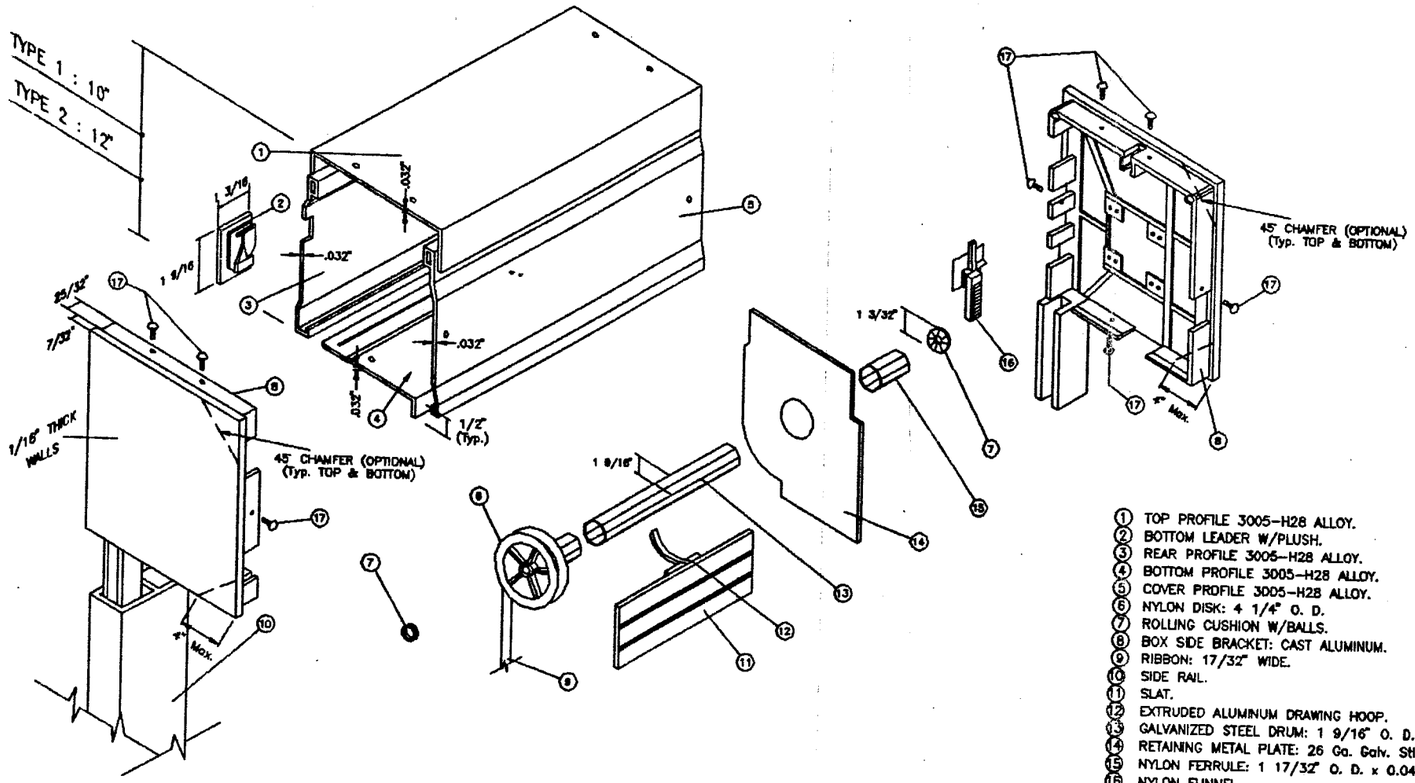

Ⓠ BOX COMPONENTS AND ASSEMBLY DETAIL

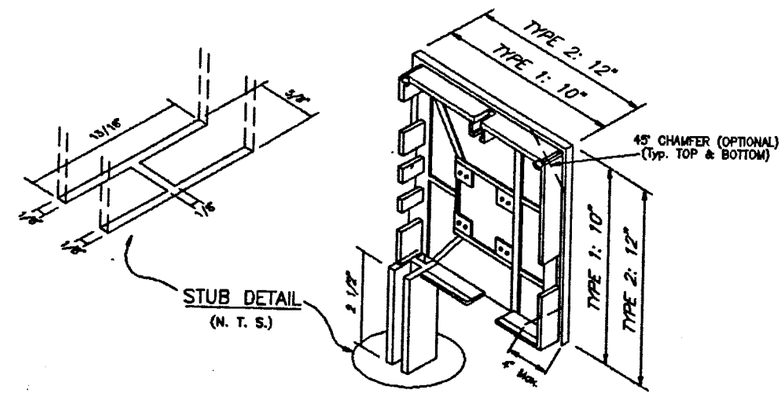

1. TOP PROFILE 3005-H28 ALLOY.
2. BOTTOM LEADER W/PLUSH.
3. REAR PROFILE 3005-H28 ALLOY.
4. BOTTOM PROFILE 3005-H28 ALLOY.
5. COVER PROFILE 3005-H28 ALLOY.
6. NYLON DISK: 4 1/4" O. D.
7. ROLLING CUSHION W/BALLS.
8. BOX SIDE BRACKET: CAST ALUMINUM.
9. RIBBON: 17/32" WIDE.
10. SIDE RAIL.
11. SLAT.
12. EXTRUDED ALUMINUM DRAWING HOOP.
13. GALVANIZED STEEL DRUM: 1 9/16" O. D. x 0.032" Thk.
14. RETAINING METAL PLATE: 26 Ga. Galv. Stl. AT EACH END.
15. NYLON FERRULE: 1 17/32" O. D. x 0.045" Thk. x 3 5/16" Long.
16. NYLON FUNNEL.
17. SCREWS: # 4 x 1/2" S. S.

Ⓡ BOX SIDE BRACKET TYPES

PRODUCT RENEWED
ACCEPTANCE No. 98-0113.04
EXPIRATION DATE FEBRUARY 19, 2001
By Manuel Perez
PRODUCT CONTROL DIVISION
BUILDING CODE COMPLIANCE OFFICE

PRODUCT RENEWED
ACCEPTANCE No. 00-1121.05
EXPIRATION DATE 02/19/2006
By Manuel Perez
PRODUCT CONTROL DIVISION
BUILDING CODE COMPLIANCE OFFICE

APPROVED AS COMPLYING WITH THE SOUTH FLORIDA BUILDING CODE
DATE OCTOBER 10 1996
BY Manuel Perez
PRODUCT CONTROL DIVISION
BUILDING CODE COMPLIANCE OFFICE
ACCEPTANCE NO. 96-0913.02

DADE COUNTY

Walter A. Tillit
9/19/96

TILTECO INC.
TILLIT TESTING & ENGINEERING COMPANY
6595 N.W. 36th. St., Ste. 217, VIRGINIA GARDENS, Fl. 33166
Phone : (305)871-1530 . Fax : (305)871-1531
WALTER A. TILLIT Jr., P. E.
FLORIDA Lic. # 44167

ROLL-UP SHUTTER

SHUTTER GUARD
10801 OAK STREET N. E.
ST. PETERSBURG, FLORIDA 33716

REV. No	DESCRIPTION	DATE	REV. No	DESCRIPTION	DATE
1	–	–	3		
2			4		

SCALE –
DATE 9/9/96
DRAWING No 96 – 283
SHEET 3 OF 12

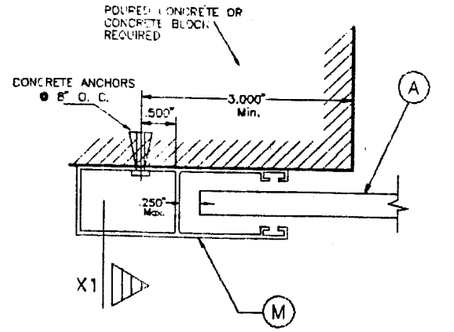

SECTION P – P (1) : WALL MOUNT

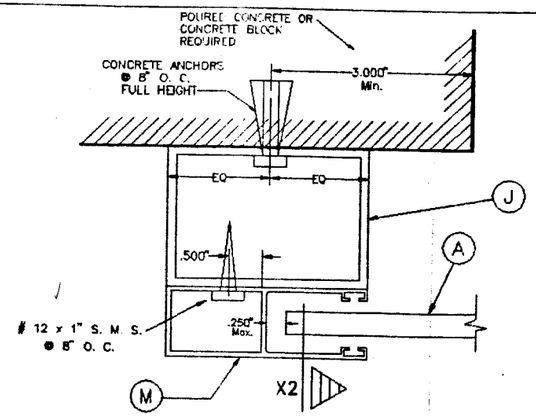

SECTION P – P (2) : BUILD-OUT

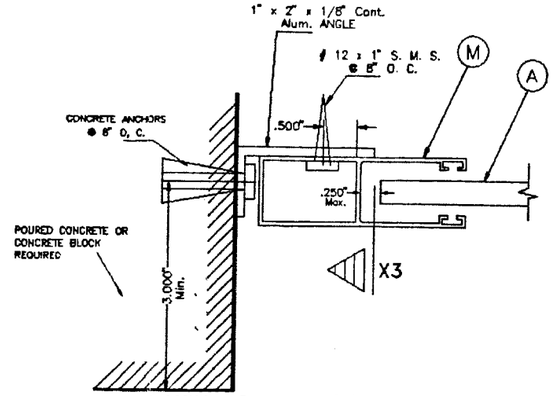

SECTION P – P (3) : SIDE WALL MOUNT

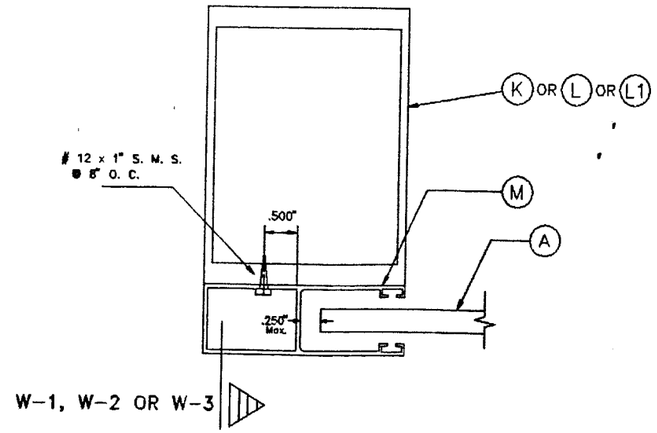

SECTION Q – Q : MULLION MOUNT

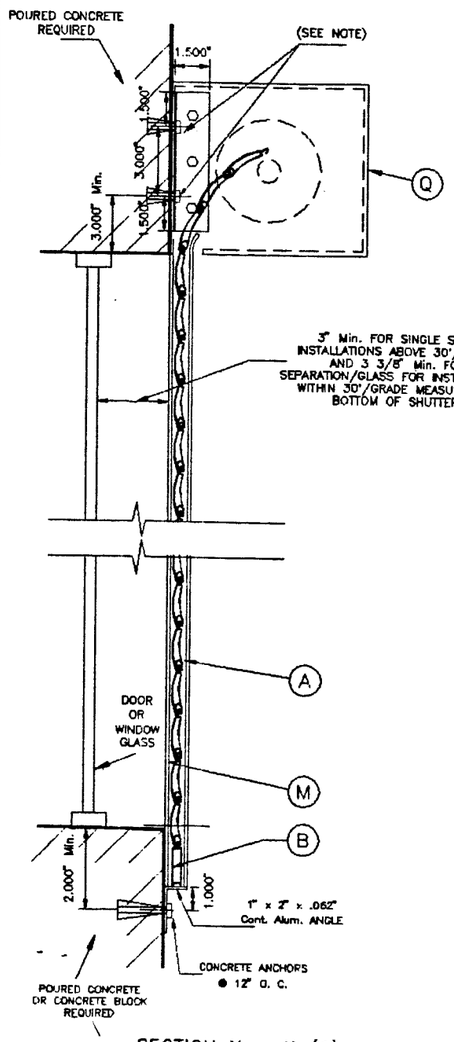

SECTION X – X (1)

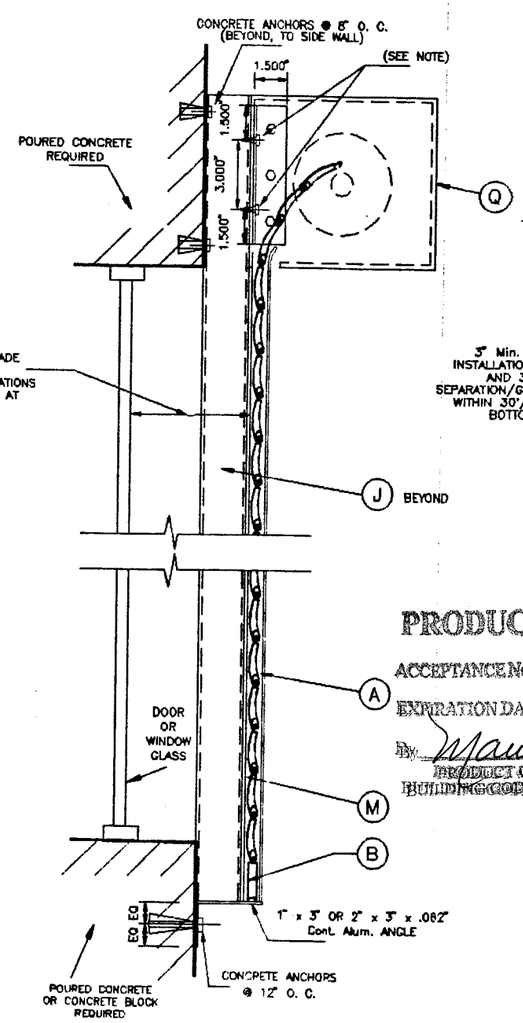

SECTION X – X (2)

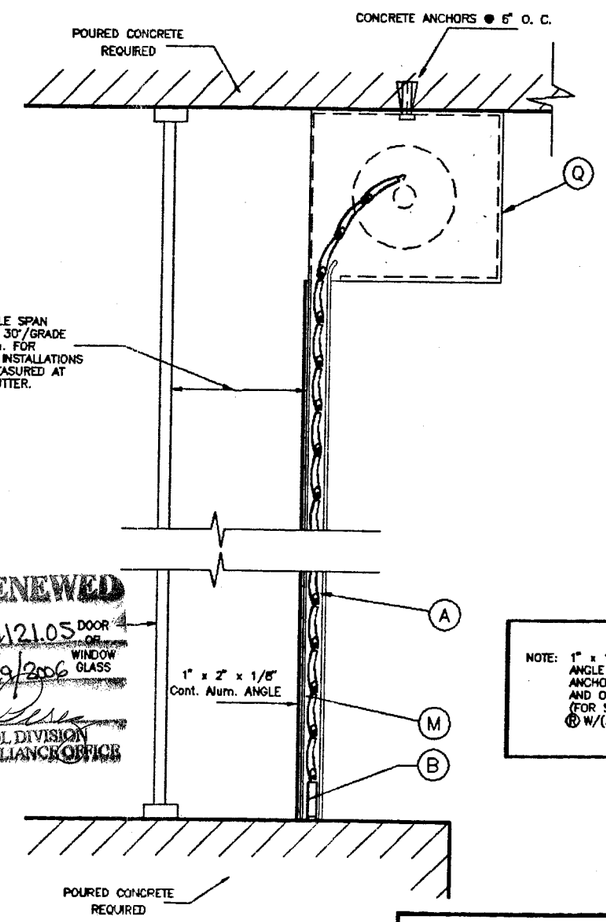

SECTION X –X (3)

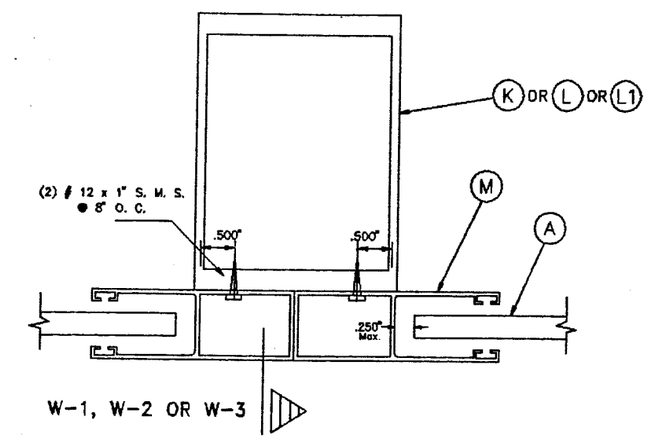

SECTION R – R : MULLION MOUNT

NOTE: 1" x 1 1/2" x 0.100" x 0'-6" ALUMINUM ANGLE W/(2) 1/4" # x 2" TAPCON OR TAPPER ANCHORS TO WALL FOR SECTION X-X (1), AND OR (2) # 12 x 3/4" S. M. S. TO Ⓐ (FOR SECTION X-X (2)). ATTACH ANGLE TO Ⓑ W/(3) 3/16" # S. S. RIVETS.

PRODUCT RENEWED
ACCEPTANCE No. 00-1121.05 DOOR OR WINDOW GLASS
EXPIRATION DATE 02/19/2006
By Manuel Perez
PRODUCT CONTROL DIVISION
BUILDING CODE COMPLIANCE OFFICE

PRODUCT RENEWED
ACCEPTANCE No. 98-0113.04
EXPIRATION DATE FEBRUARY 19, 2001
By Manuel Perez
PRODUCT CONTROL DIVISION
BUILDING CODE COMPLIANCE OFFICE

APPROVED AS COMPLYING WITH THE SOUTH FLORIDA BUILDING CODE
DATE OCTOBER 10, 1996
BY Manuel Perez
PRODUCT CONTROL DIVISION
BUILDING CODE COMPLIANCE OFFICE
ACCEPTANCE NO. 96-0913.02
DADE COUNTY

Walter A. Tillit
9/10/96

TILTECO INC.
TILLIT TESTING & ENGINEERING COMPANY
8595 N.W. 36th. St., Ste. 217, VIRGINIA GARDENS, Fl. 33166
Phone : (305)871-1530 . Fax : (305)871-1531
WALTER A. TILLIT Jr., P. E.
FLORIDA Lic. # 44167

ROLL-UP SHUTTER

SHUTTER GUARD

10801 OAK STREET N. E.
St. PETERSBURG, FLORIDA 33716

REV. No	DESCRIPTION	DATE	REV. No	DESCRIPTION	DATE
1	–	–	3		
2			4		

SCALE –
DATE 9/9/95
DRAWING No 96 – 283
SHEET 4 OF 12

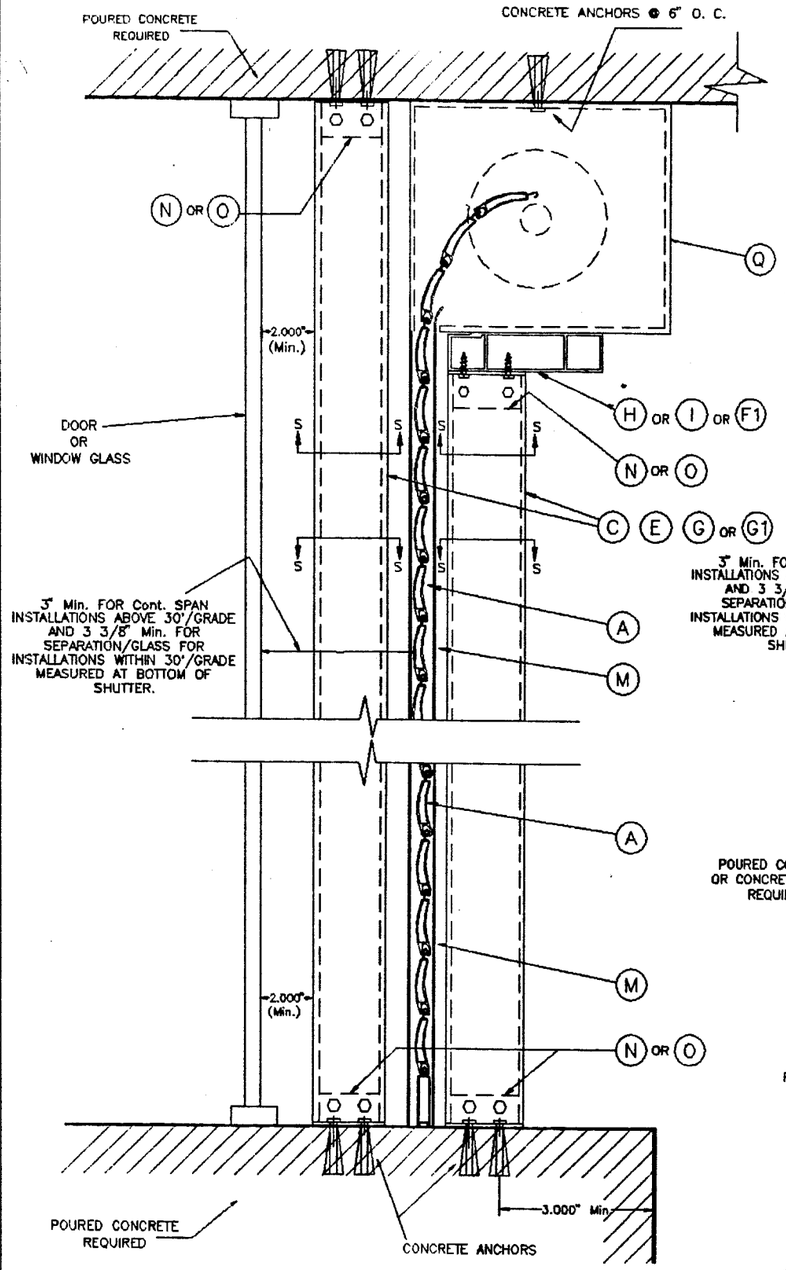

CEILING & FLOOR MOUNTING :
SECTION V – V (1)

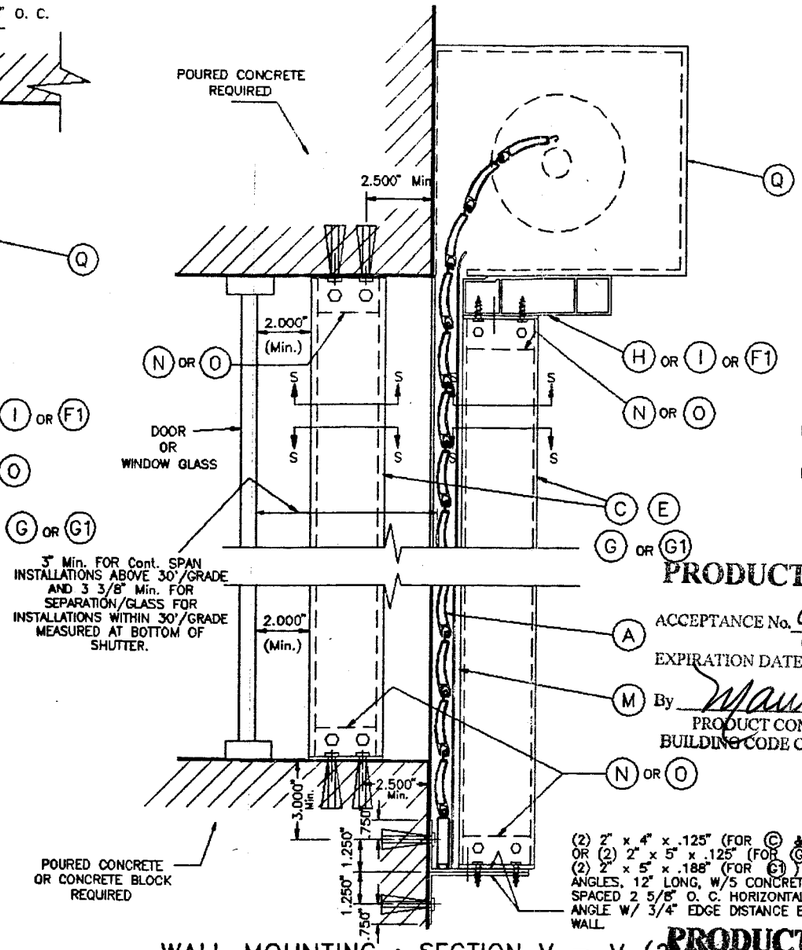

WALL MOUNTING : SECTION V – V (2)

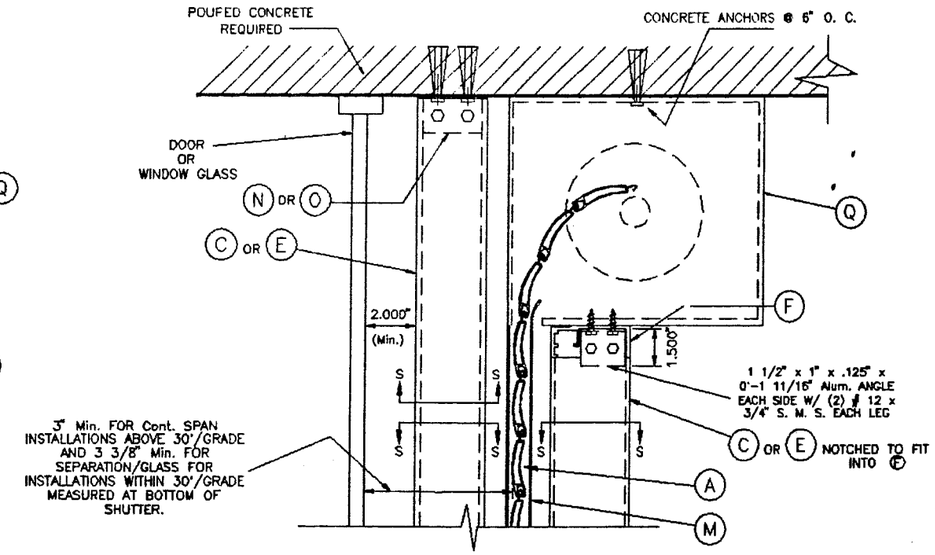

CEILING MOUNTING : SECTION V – V (1)

PRODUCT RENEWED
ACCEPTANCE No. 98-0113.04
EXPIRATION DATE FEBRUARY 19, 2001
By Manuel Perez
PRODUCT CONTROL DIVISION
BUILDING CODE COMPLIANCE OFFICE

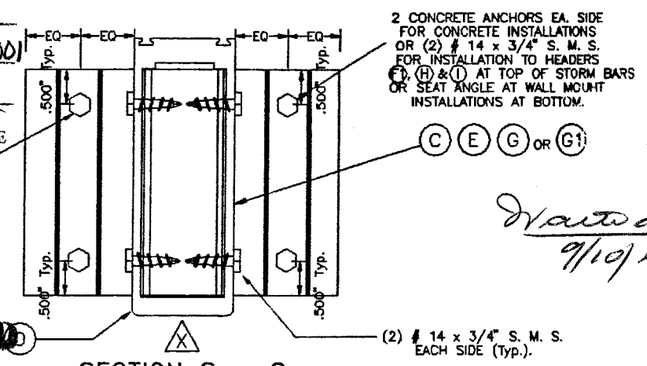

SECTION S – S

Walter A. Tillit
9/10/96

PRODUCT RENEWED
ACCEPTANCE No. 00-1121.05
EXPIRATION DATE 02/19/2006
By Manuel Perez
PRODUCT CONTROL DIVISION
BUILDING CODE COMPLIANCE OFFICE

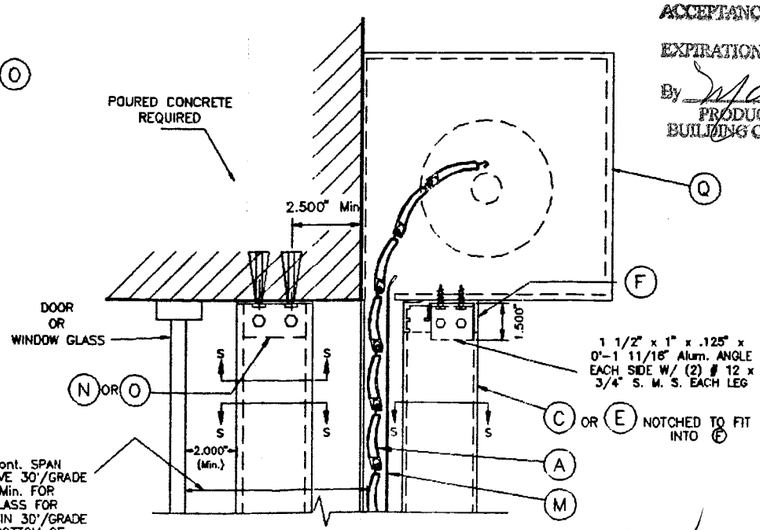

WALL MOUNTING : SECTION V – V (2)

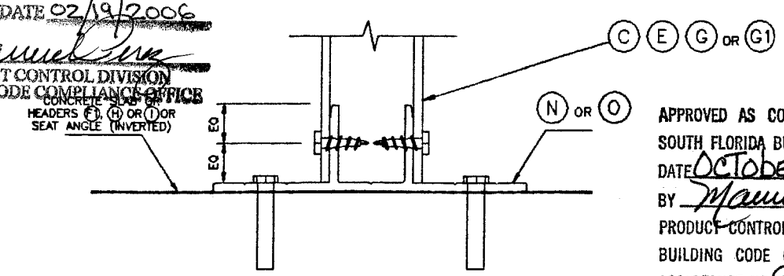

ELEVATION X – X
FULL SCALE

APPROVED AS COMPLYING WITH THE SOUTH FLORIDA BUILDING CODE
DATE OCTOBER 10 1996
BY Manuel Perez
PRODUCT CONTROL DIVISION
BUILDING CODE COMPLIANCE OFFICE
ACCEPTANCE NO. 96-0913.02

DADE COUNTY

TILTECO INC.
TILLIT TESTING & ENGINEERING COMPANY
8595 N.W. 36th. St., Ste. 217, VIRGINIA GARDENS, Fl. 33166
Phone : (305)871-1530 . Fax : (305)871-1531
WALTER A. TILLIT Jr., P. E.
FLORIDA Lic. # 44167

ROLL-UP SHUTTER

SHUTTER GUARD
10801 OAK STREET N. E.
St. PETERSBURG, FLORIDA 33716

REV. No	DESCRIPTION	DATE	REV. No	DESCRIPTION	DATE
1	–	–	3		
2			4		

SCALE –
DATE 9/9/96
DRAWING No 96 – 283
SHEET 5 OF 12

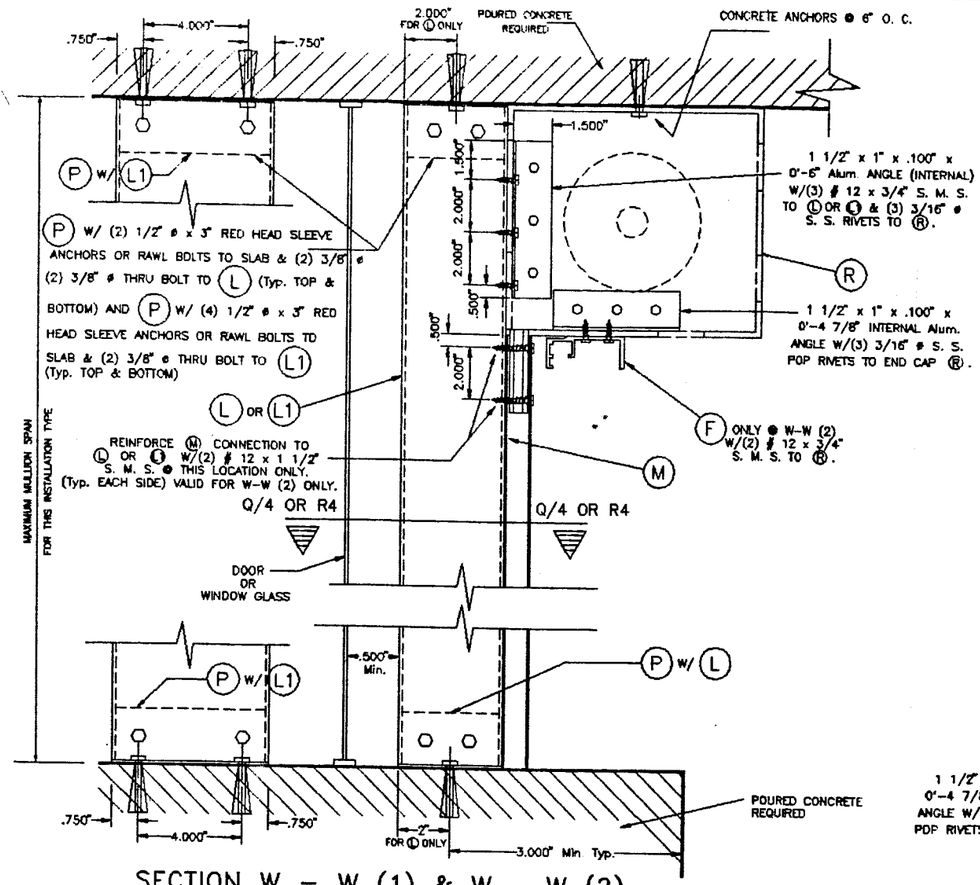

SECTION W – W (1) & W – W (2)

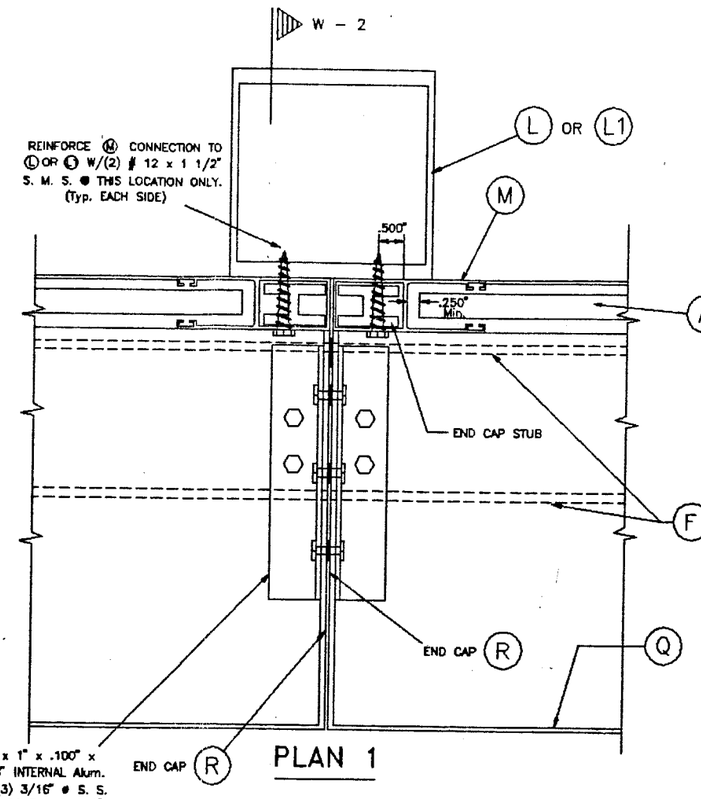

PLAN 1

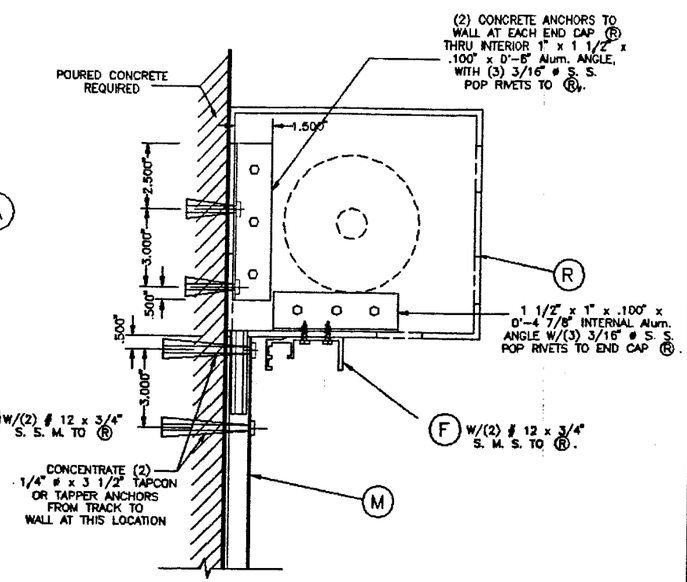

WALL MOUNTING :

SECTION W – W (4)

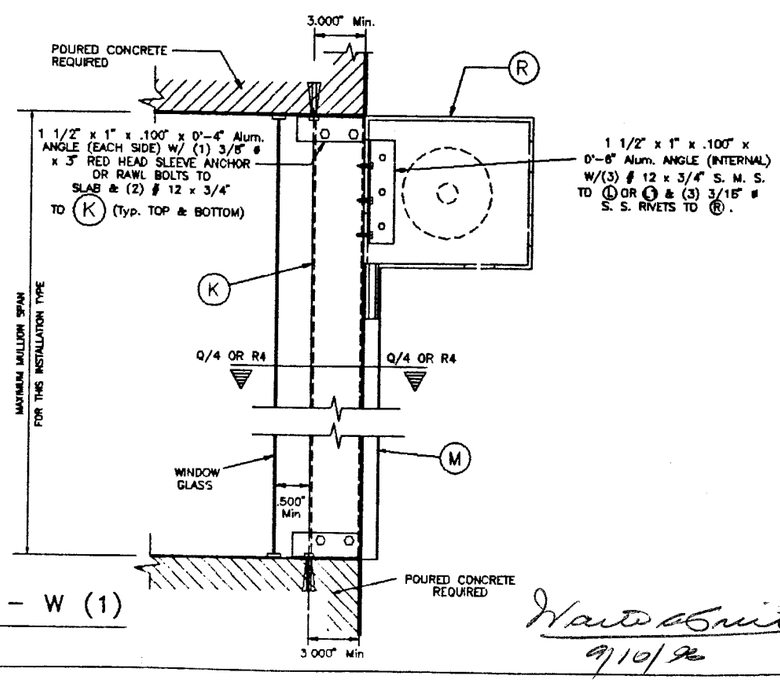

SECTION W – W (1)

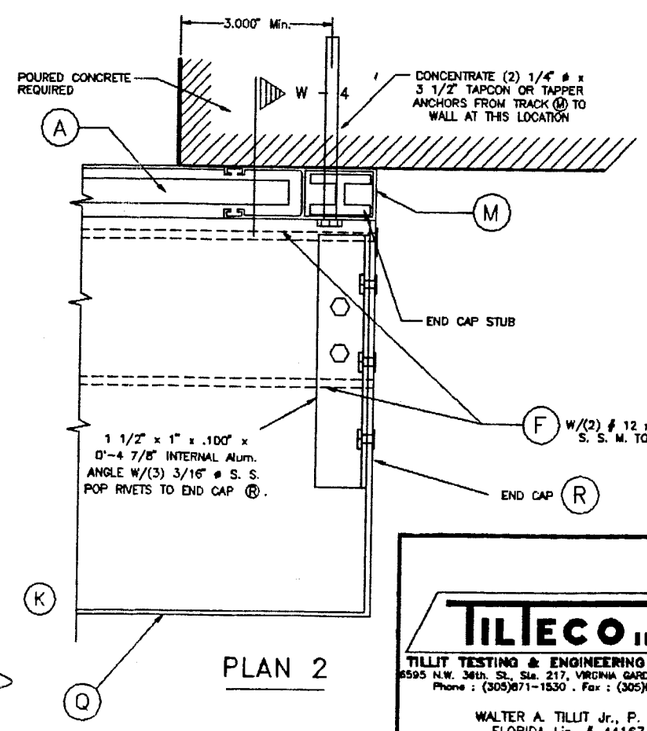

PLAN 2

PRODUCT RENEWED

ACCEPTANCE No. 98-0113.04

EXPIRATION DATE FEBRUARY 19, 2001

By Manuel Sera

PRODUCT CONTROL DIVISION
BUILDING CODE COMPLIANCE OFFICE

PRODUCT RENEWED

ACCEPTANCE No. 00-1121.05

EXPIRATION DATE 02/19/2006

By Manuel Sera

PRODUCT CONTROL DIVISION
BUILDING CODE COMPLIANCE OFFICE

APPROVED AS COMPLYING WITH THE SOUTH FLORIDA BUILDING CODE

DATE October 10, 1996

BY Manuel Sera

PRODUCT CONTROL DIVISION
BUILDING CODE COMPLIANCE OFFICE

ACCEPTANCE No. 96-0913.02

DADE COUNTY

Walter A. Tillit
9/10/96

TILTECO INC.
TILLIT TESTING & ENGINEERING COMPANY
6595 N.W. 36th. St., Ste. 217, VIRGINIA GARDENS, Fl. 33166
Phone : (305)871-1530 . Fax : (305)871-1531

WALTER A. TILLIT Jr., P. E.
FLORIDA Lic. # 44167

ROLL-UP SHUTTER

SHUTTER GUARD

10801 OAK STREET N. E.
St. PETERSBURG, FLORIDA 33716

REV. No	DESCRIPTION	DATE	REV. No	DESCRIPTION	DATE
1	–	–	3		
2			4		

SCALE –

DATE 9/9/96

DRAWING No 96 – 283

SHEET 6 OF 12

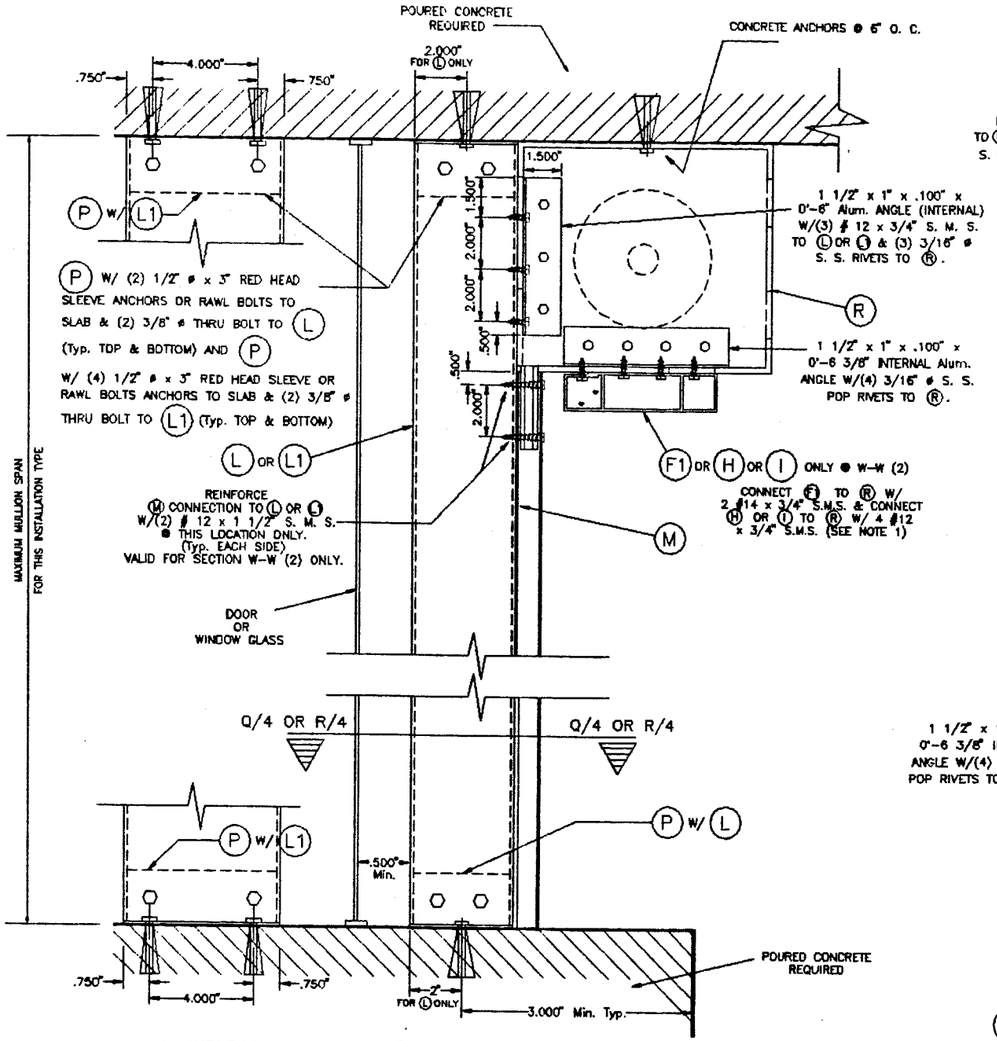

SECTION W – W (1) & W – W (2)

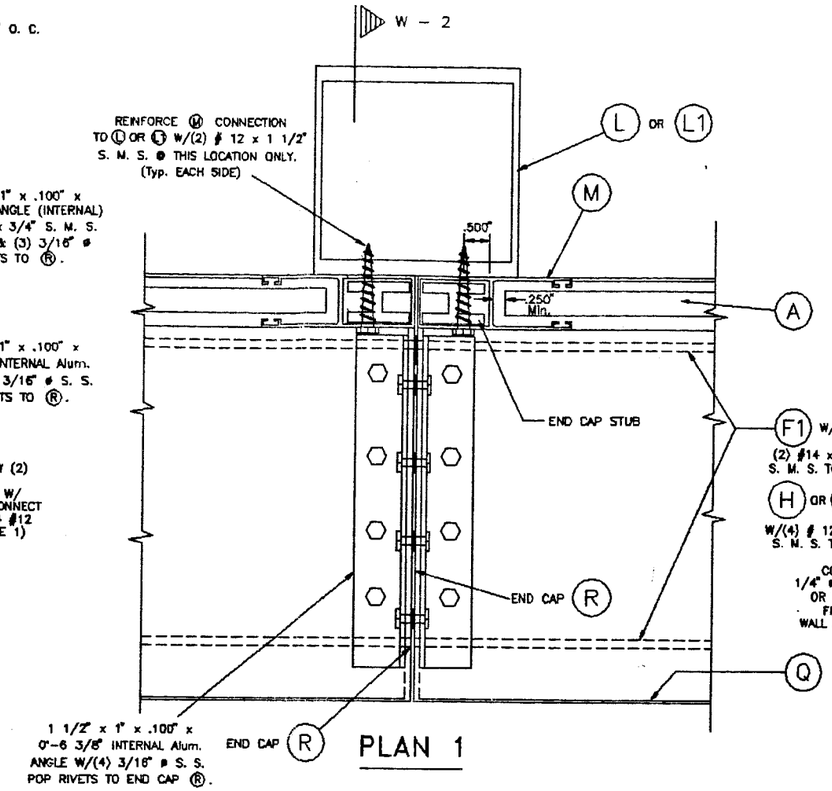

PLAN 1

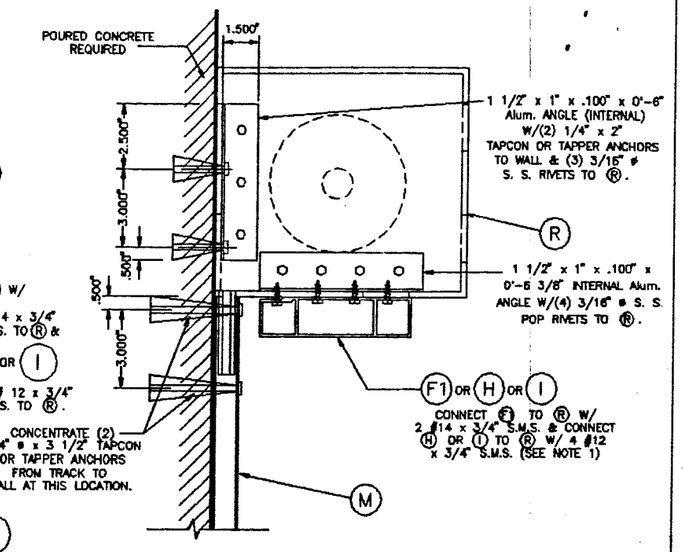

WALL MOUNTING :

SECTION W – W (4)

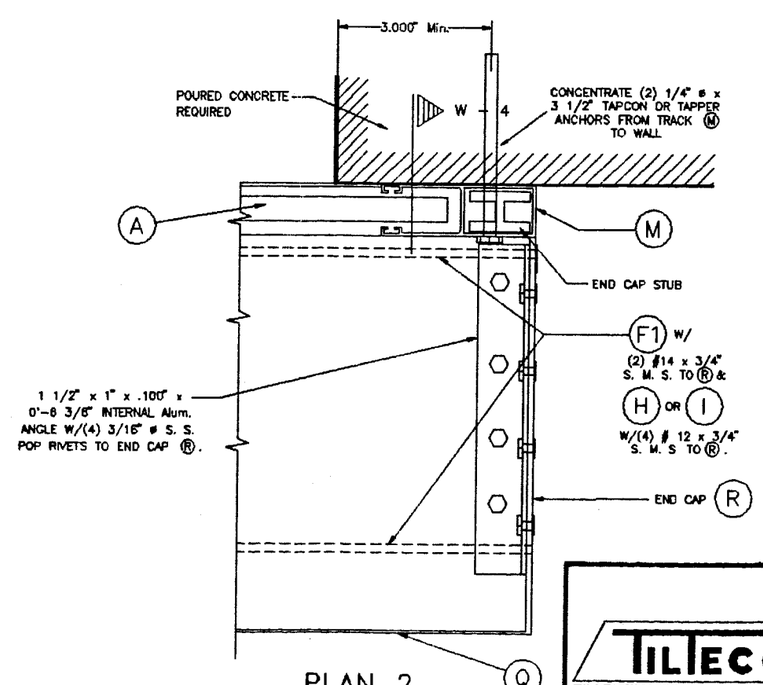

PLAN 2

NOTE 1: HEADERS (F1), (H) OR (I) CONNECTION TO MULLION (L) OR (L1) OR WALL SHOWN ON SECTIONS W-W (1), W-W (2) & W-W (4), SHALL ONLY BE PERMITTED FOR DESIGN PRESSURE RATINGS UP TO 70 psf, FOR A STORM BAR SPAN (VERTICALLY) UP TO 8'-0", AND FOR A HEADER MAXIMUM SPAN OF 10'-0". FOR CONDITIONS EXCEEDING ABOVE MENTIONED, FRAMING SHOWN ON SECTIONS W-W (3) & W-W (5) INDICATED ON SHEET 8 OF 12 SHALL BE USED

PRODUCT RENEWED
ACCEPTANCE No. 98-0113.04
EXPIRATION DATE FEBRUARY 19, 2001
By Manuel Perez
PRODUCT CONTROL DIVISION
BUILDING CODE COMPLIANCE OFFICE

APPROVED AS COMPLYING WITH THE SOUTH FLORIDA BUILDING CODE
DATE OCTOBER 10 1996
BY Manuel Perez
PRODUCT CONTROL DIVISION
BUILDING CODE COMPLIANCE OFFICE
ACCEPTANCE NO. 96-0913.02

PRODUCT RENEWED
ACCEPTANCE No. 00-1121.05
EXPIRATION DATE 02/19/2006
By Manuel Perez
PRODUCT CONTROL DIVISION
BUILDING CODE COMPLIANCE OFFICE

DADE COUNTY

Walter A. Tillit
9/10/96

TILTECO INC.
TILLIT TESTING & ENGINEERING COMPANY
8585 N.W. 36th. St., Ste. 217, VIRGINIA GARDENS, Fl. 33166
Phone : (305)871-1530 . Fax : (305)871-1531
WALTER A. TILLIT Jr., P. E.
FLORIDA Lic. # 44167

ROLL-UP SHUTTER

SHUTTER GUARD
10601 OAK STREET N. E
ST. PETERSBURG, FLORIDA 33716

REV. No	DESCRIPTION	DATE	REV. No	DESCRIPTION	DATE
1	–	–	3		
2			4		

SCALE –
DATE 9/9/96
DRAWING No 96 – 283
SHEET 7 OF 12

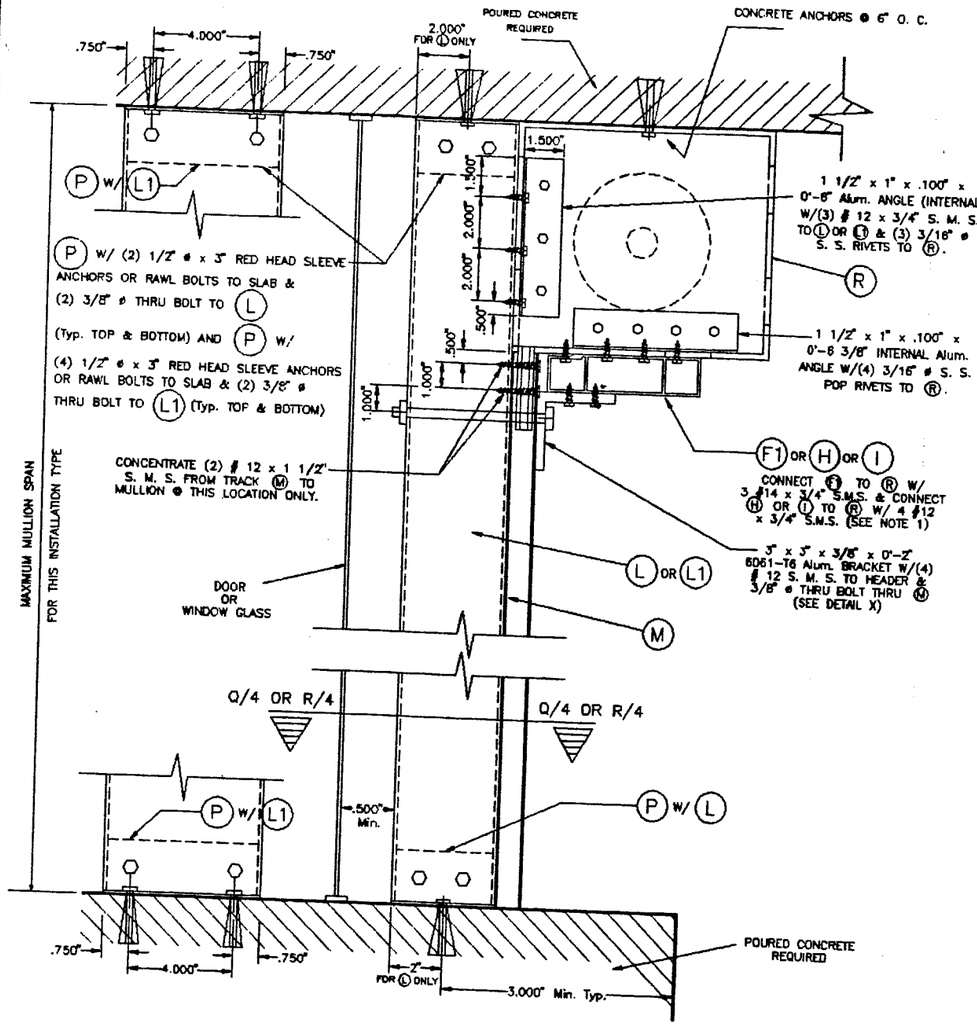

SECTION W – W (3)

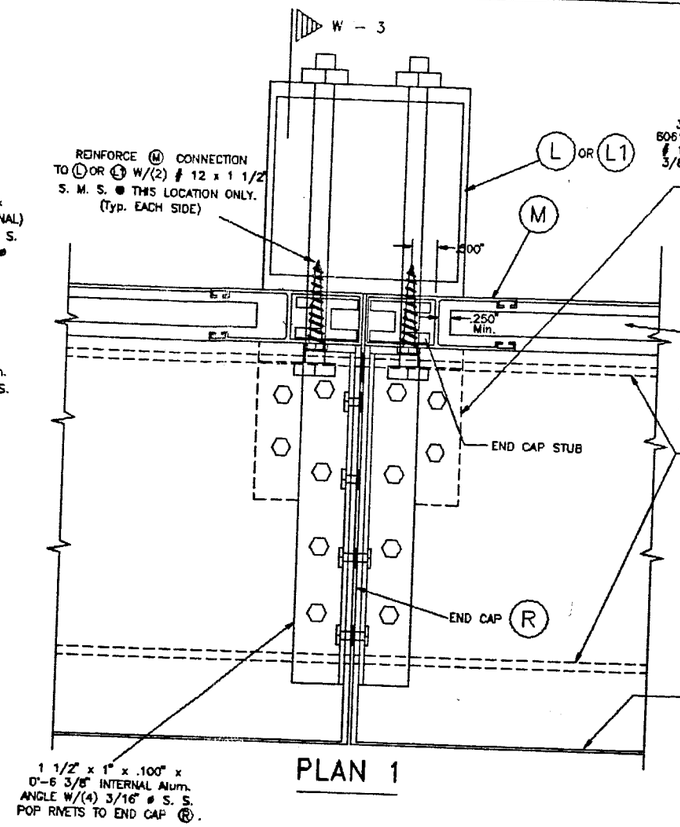

PLAN 1

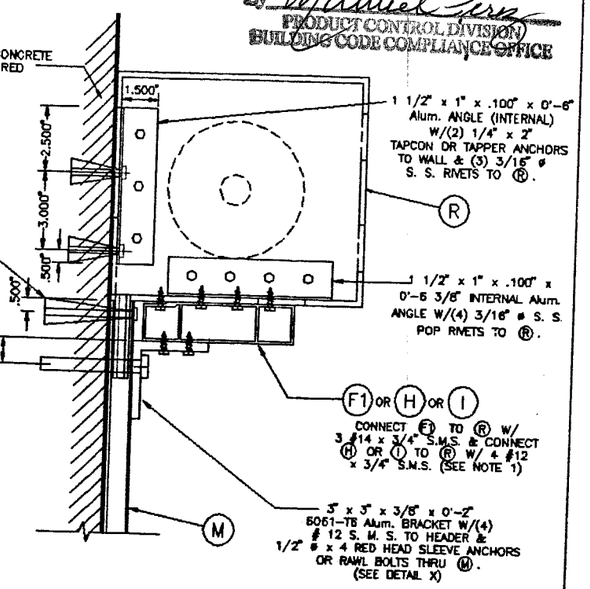

WALL MOUNTING :

SECTION W – W (5)

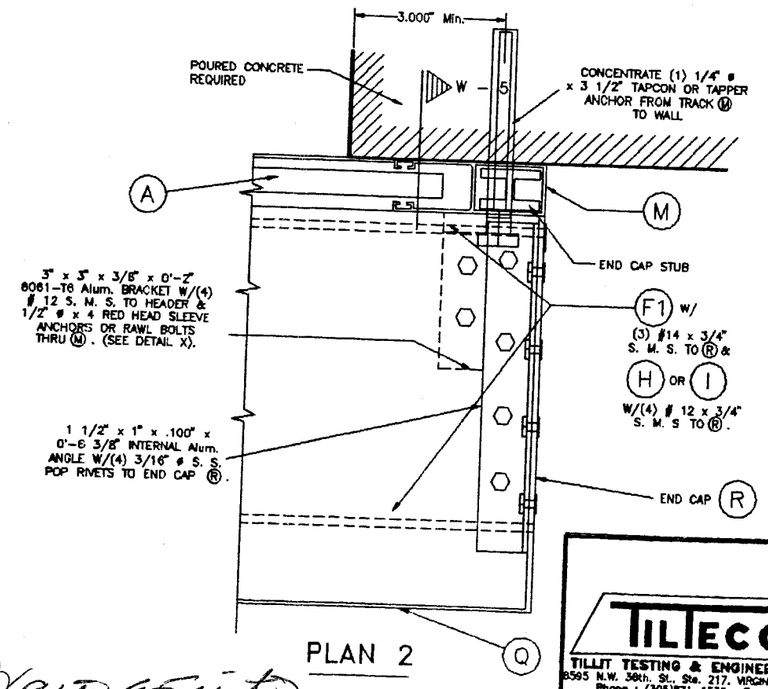

PLAN 2

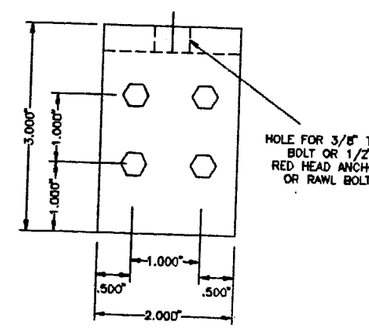

DETAIL X (PLAN)

PRODUCT RENEWED
ACCEPTANCE No. 00-1121.05
EXPIRATION DATE 02/19/2006
By Manuel Perez
PRODUCT CONTROL DIVISION
BUILDING CODE COMPLIANCE OFFICE

PRODUCT RENEWED
ACCEPTANCE No. 98-0113.04
EXPIRATION DATE FEBRUARY 19, 2001
By Manuel Perez
PRODUCT CONTROL DIVISION
BUILDING CODE COMPLIANCE OFFICE

APPROVED AS COMPLYING WITH THE SOUTH FLORIDA BUILDING CODE
DATE OCTOBER 10, 1996
BY Manuel Perez
PRODUCT CONTROL DIVISION
BUILDING CODE COMPLIANCE OFFICE
ACCEPTANCE NO. 96-0913.02

Walter A. Tillit
9/10/96

TILTECO INC.
TILLIT TESTING & ENGINEERING COMPANY
8595 N.W. 36th. St., Ste. 217, VIRGINIA GARDENS, FL. 33166
Phone : (305)871-1530 . Fax : (305)871-1531
WALTER A. TILLIT Jr., P. E.
FLORIDA Lic. # 44167

DADE COUNTY

ROLL-UP SHUTTER

SHUTTER GUARD
10601 OAK STREET N. E.
ST. PETERSBURG, FLORIDA 33716

REV. No	DESCRIPTION	DATE	REV. No	DESCRIPTION	DATE
1	–	–	3		
2			4		

SCALE –
DATE 9/9/96
DRAWING No 96 – 283
SHEET 8 OF 12

SLAT PERFORMANCE CHART
MAXIMUM NEGATIVE DESIGN PRESSURE RATING "W" (p. s. f.) AND CORRESPONDING MAXIMUM SLAT SPAN "L" FOR TYPE 1 SLAT
(USE NEGATIVE PRESSURE VALUES AS PER ASCE 7-88)

SLAT TYPE 1 (US 60) / Max. DESIGN LOAD "W" (p.s.f.)	MAXIMUM SLAT SPAN		MINIMUM SEPARATION TO GLASS	
	SINGLE & MULTIPLE UNIT *	SINGLE & MULTIPLE UNIT **	SINGLE & MULTIPLE UNIT ***	SINGLE & MULTIPLE UNIT ****
47.8	4'-8"	5'-9"	3 3/8"	3"
52.0	4'-8"	5'-8"	3 3/8"	3"
55.6	4'-8"	5'-7"	3 3/8"	3"
57.2	4'-8"	5'-6"	3 3/8"	3"
58.6	4'-8"	5'-6"	3 3/8"	3"
59.5	4'-8"	5'-6"	3 3/8"	3"
61.5	4'-8"	5'-5"	3 3/8"	3"
61.8	4'-8"	5'-5"	3 3/8"	3"
63.4	4'-8"	5'-5"	3 3/8"	3"
63.6	4'-8"	5'-5"	3 3/8"	3"
66.9	4'-8"	5'-3"	3 3/8"	3"
67.5	4'-8"	5'-3"	3 3/8"	3"
70.1	4'-8"	5'-2"	3 3/8"	3"
71.1	4'-8"	5'-1"	3 3/8"	3"

SLAT TYPE 1 (US 60) / Max. DESIGN LOAD "W" (p.s.f.)	MAXIMUM SLAT SPAN		MINIMUM SEPARATION TO GLASS	
	SINGLE & MULTIPLE UNIT *	SINGLE & MULTIPLE UNIT **	SINGLE & MULTIPLE UNIT ***	SINGLE & MULTIPLE UNIT ****
71.5	4'-8"	5'-1"	3 3/8"	3"
72.9	4'-8"	5'-0"	3 3/8"	3"
75.1	4'-8"	5'-0"	3 3/8"	3"
75.3	4'-8"	4'-11"	3 3/8"	3"
77.0	4'-8"	4'-11"	3 3/8"	3"
77.5	4'-8"	4'-11"	3 3/8"	3"
78.8	4'-8"	4'-10"	3 3/8"	3"
80.7	4'-8"	4'-10"	3 3/8"	3"
81.5	4'-8"	4'-9"	3 3/8"	3"
82.5	4'-8"	4'-9"	3 3/8"	3"
83.4	4'-8"	4'-9"	3 3/8"	3"
86.2	4'-8"	4'-8"	3 3/8"	3"
86.8	4'-7"	4'-7"	3 3/8"	3"
88.5	4'-7"	4'-7"	3 3/8"	3"
90.3	4'-6"	4'-6"	3 3/8"	3"

* SPANS VALID FOR INSTALLATIONS WITHIN THE FIRST 30'-0" ELEVATION OF BUILDING MEASURED AT BOTTOM OF SHUTTER.

** SPANS VALID FOR INSTALLATIONS LOCATED ABOVE THE FIRST 30'-0" ELEVATION OF BUILDING MEASURED AT BOTTOM OF SHUTTER.

*** MINIMUM SEPARARTION TO GLASS FOR SHUTTERS INSTALLED WITHIN THE FIRST 30'-0" ELEVATION OF BUILDING AND MAXIMUM SPAN.

**** MINIMUM SEPARATION TO GLASS FOR SHUTTERS INSTALLED ABOVE 30'-0" ELEVATION OF BUILDING, MEASURED AT BOTTOM OF SHUTTER.

NOTE: MINIMUM SEPARATION TO GLASS FOR SINGLE AND MULTIPLE UNITS SHALL BE MEASURED FROM SLAT TO GLASS.

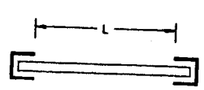

SINGLE SPAN

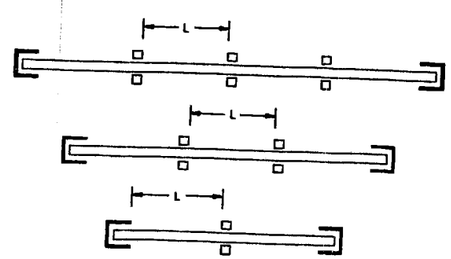

MULTIPLE SPAN

SPAN LAYOUT

PRODUCT RENEWED
ACCEPTANCE No. 98-0113.04
EXPIRATION DATE FEBRUARY 19, 2001
By Manuel Perez
PRODUCT CONTROL DIVISION
BUILDING CODE COMPLIANCE OFFICE

PRODUCT RENEWED
ACCEPTANCE No. 00-1121.05
EXPIRATION DATE 02/19/2006
By Manuel Perez
PRODUCT CONTROL DIVISION
BUILDING CODE COMPLIANCE OFFICE

APPROVED AS COMPLYING WITH THE SOUTH FLORIDA BUILDING CODE
DATE OCTOBER 10 1996
BY Manuel Perez
PRODUCT CONTROL DIVISION
BUILDING CODE COMPLIANCE OFFICE
ACCEPTANCE NO. 96-0913.02

Walter A. Tillit
9/10/96

TILTECO INC.
TILLIT TESTING & ENGINEERING COMPANY
8595 N.W. 38th. St., Ste. 217, VIRGINIA GARDENS, FL 33166
Phone : (305)871-1530 . Fax : (305)871-1531
WALTER A. TILLIT Jr., P. E.
FLORIDA Lic. # 44167

DADE COUNTY

ROLL-UP SHUTTER

SHUTTER GUARD
10601 OAK STREET N. E.
ST. PETERSBURG, FLORIDA 33716

REV. No	DESCRIPTION	DATE	REV. No	DESCRIPTION	DATE
1	–	–	3		
2			4		

SCALE –
DATE 9/9/96
DRAWING No 96 – 283
SHEET 9 OF 12

STORM BAR LOADING CHART

MAXIMUM NEGATIVE DESIGN PRESSURE RATING "W" (p. s. f.) AND CORRESPONDING MAXIMUM SPAN "L" FOR A GIVEN TYPE OF STORM BAR AND STORM BAR SPACING. (USE NEGATIVE PRESSURE VALUES AS PER ASCE 7-88)

MAXIMUM DESIGN LOAD "W" (p.s.f.)	TYPE 1 STORM BAR PURLIN 3"				TYPE 2 STORM BAR PURLIN 3" W/ 3" INSERT				TYPE 3 STORM BAR PURLIN 4"				TYPE 4 STORM BAR PURLIN 4" W/ 4" INSERT			
	STORM BAR SPACING *				STORM BAR SPACING *				STORM BAR SPACING *				STORM BAR SPACING *			
	< 6'-0"	5'-0"	4'-0"	≤ 3'-0"	< 6'-0"	5'-0"	4'-0"	≤ 3'-0"	< 6'-0"	5'-0"	4'-0"	≤ 3'-0"	< 6'-0"	5'-0"	4'-0"	≤ 3'-0"
47.8	6'-0"	6'-4"	6'-8"	7'-2"	7'-2"	7'-6"	7'-11"	8'-6"	8'-8"	9'-0"	9'-7"	10'-3"	9'-9"	10'-2"	10'-9"	11'-7"
52.0	5'-10"	6'-2"	6'-7"	7'-0"	7'-0"	7'-4"	7'-9"	8'-4"	8'-6"	8'-10"	9'-4"	10'-1"	9'-6"	10'-0"	10'-6"	11'-4"
55.6	5'-8"	6'-1" **	6'-5"	6'-11"	6'-10"	7'-2"	7'-7"	8'-2"	8'-4"	8'-9"	9'-2"	9'-11"	9'-4"	9'-10"	10'-4"	11'-2"
57.2	5'-7"	6'-0"	6'-4"	6'-10"	6'-10"	7'-2"	7'-7"	8'-1"	8'-3"	8'-8"	9'-2"	9'-10"	9'-3"	9'-9"	10'-3"	11'-1"
58.6	5'-6"	6'-0"	4'-0"	6'-10"	6'-9"	7'-1"	7'-6"	8'-2"	8'-3"	8'-7"	9'-1"	9'-9"	9'-3"	9'-8"	10'-3"	11'-0"
59.5	5'-5"	6'-0"	6'-4"	6'-10"	6'-9"	7'-0"	7'-6"	8'-0"	8'-2"	8'-7"	9'-0"	9'-9"	9'-2"	9'-8"	10'-2"	10'-11"
61.5	5'-4"	5'-10"	6'-4"	6'-9"	6'-8"	7'-0"	7'-5"	8'-0"	8'-2"	8'-6"	9'-0"	9'-8"	9'-1"	9'-7"	10'-1"	10'-10"
61.8	5'-4"	5'-10"	6'-3"	6'-9"	6'-8"	7'-0"	7'-5"	7'-11"	8'-1"	8'-6"	9'-0"	9'-8"	9'-1"	9'-6"	10'-1"	10'-10"
63.4	5'-4"	5'-9"	6'-3"	6'-9"	6'-8"	7'-11"	7'-4"	7'-11"	8'-0"	8'-5"	8'-11"	9'-7"	9'-1"	9'-6"	10'-0"	10'-9"
63.6	5'-3"	5'-9"	6'-3"	6'-8"	6'-8"	6'-11"	7'-4"	7'-11"	8'-0"	8'-5"	8'-11"	9'-7"	9'-1"	9'-6"	10'-0"	10'-9"
66.9	5'-2"	5'-7"	6'-2"	6'-7"	6'-7"	6'-10"	7'-3"	7'-10"	8'-0"	8'-4"	8'-10"	9'-6"	8'-11"	9'-4"	9'-11"	10'-7"
67.5	5'-2"	5'-7"	6'-2"	6'-7"	6'-7"	6'-10"	7'-3"	7'-10"	7'-11"	8'-4"	8'-9"	9'-5"	8'-11"	9'-4"	9'-10"	10'-7"
70.1	5'-0"	5'-6"	6'-1"	6'-6"	6'-6"	6'-9"	7'-2"	7'-8"	7'-10"	8'-3"	8'-8"	9'-4"	8'-10"	9'-3"	9'-9"	10'-6"
71.1	5'-0"	5'-6"	6'-0"	6'-6"	6'-6"	6'-9"	7'-2"	7'-8"	7'-10"	8'-2"	8'-8"	9'-4"	8'-10"	9'-3"	9'-9"	10'-6"
71.5	5'-0"	5'-5"	6'-0"	6'-6"	6'-5"	6'-9"	7'-2"	7'-8"	7'-10"	8'-2"	8'-8"	9'-4"	8'-9"	9'-2"	9'-9"	10'-5"
72.9	4'-11"	5'-5"	6'-0"	6'-5"	6'-5"	6'-9"	7'-1"	7'-8"	7'-9"	8'-2"	8'-8"	9'-3"	8'-9"	9'-2"	9'-8"	10'-5"
75.1	4'-10"	5'-4"	5'-11"	6'-5"	6'-4"	6'-8"	7'-0"	7'-7"	7'-9"	8'-1"	8'-7"	9'-2"	8'-8"	9'-1"	9'-7"	10'-4"
75.3	4'-10"	5'-4"	5'-11"	6'-5"	6'-4"	6'-8"	7'-0"	7'-7"	7'-9"	8'-1"	8'-6"	9'-2"	8'-8"	9'-1"	9'-7"	10'-4"
77.0	4'-9"	5'-3"	5'-10"	6'-4"	6'-4"	6'-7"	7'-0"	7'-6"	7'-8"	8'-0"	8'-6"	9'-2"	8'-8"	9'-0"	9'-7"	10'-3"
77.5	4'-9"	5'-3"	5'-10"	6'-4"	6'-4"	6'-7"	7'-0"	7'-6"	7'-8"	8'-0"	8'-6"	9'-1"	8'-7"	9'-0"	9'-6"	10'-3"
78.8	4'-9"	5'-2"	5'-10"	6'-3"	6'-3"	6'-7"	7'-0"	7'-5"	7'-8"	8'-0"	8'-5"	9'-1"	8'-7"	9'-0"	9'-6"	10'-2"
80.7	4'-8"	5'-2"	5'-9"	6'-3"	6'-3"	6'-6"	6'-11"	7'-5"	7'-7"	7'-11"	8'-5"	9'-0"	8'-6"	8'-11"	9'-5"	10'-2"
81.5	4'-8"	5'-1"	5'-8"	6'-4"	6'-3"	6'-6"	6'-11"	7'-5"	7'-7"	7'-11"	8'-4"	9'-0"	8'-6"	8'-11"	9'-5"	10'-1"
82.5	4'-7"	5'-1"	5'-8"	6'-3"	6'-3"	6'-6"	6'-10"	7'-5"	7'-7"	7'-11"	8'-4"	9'-0"	8'-6"	8'-10"	9'-5"	10'-1"
83.4	4'-7"	5'-0"	5'-7"	6'-3"	6'-3"	6'-6"	6'-10"	7'-4"	7'-6"	7'-11"	8'-4"	8'-11"	8'-5"	8'-10"	9'-4"	10'-1"
86.2	4'-6"	4'-11"	5'-6"	6'-2"	6'-2"	6'-5"	6'-10"	7'-4"	7'-6"	7'-10"	8'-3"	8'-10"	8'-5"	8'-9"	9'-3"	10'-0"
86.8	4'-6"	4'-11"	5'-6"	6'-2"	6'-2"	6'-5"	6'-10"	7'-4"	7'-6"	7'-10"	8'-3"	8'-10"	8'-4"	8'-9"	9'-3"	9'-11"
88.5	4'-6"	4'-11"	5'-6"	6'-2"	6'-1"	6'-5"	6'-9"	7'-3"	7'-5"	7'-9"	8'-3"	8'-10"	8'-4"	8'-9"	9'-3"	9'-11"
90.3	4'-5"	4'-10"	5'-5"	6'-2"	6'-1"	6'-4"	6'-9"	7'-3"	7'-5"	7'-9"	8'-2"	8'-10"	8'-3"	8'-8"	9'-2"	9'-10"

* STORM BAR SPACING SHALL BE SUCH THAT MAXIMUM SLAT SPAN SHALL NOT BE EXCEEDED.

PRODUCT RENEWED
ACCEPTANCE No. 00-1121.05
EXPIRATION DATE 02/19/2006
By Manuel Perez
PRODUCT CONTROL DIVISION
BUILDING CODE COMPLIANCE OFFICE

PRODUCT RENEWED
ACCEPTANCE No. 98-0113.04
EXPIRATION DATE FEBRUARY 19, 2001
By Manuel Perez
PRODUCT CONTROL DIVISION
BUILDING CODE COMPLIANCE OFFICE
APPROVED AS COMPLYING WITH THE
SOUTH FLORIDA BUILDING CODE
DATE OCTOBER 10 1996
BY Manuel Perez
PRODUCT CONTROL DIVISION
BUILDING CODE COMPLIANCE OFFICE
ACCEPTANCE NO. 96-0913.02

DADE COUNTY

Walter A. Tillit
9/10/96

TILTECO INC.
TILLIT TESTING & ENGINEERING COMPANY
8585 N.W. 36th. St., Ste. 217, VIRGINIA GARDENS, Fl. 33166
Phone : (305)871-1530 . Fax : (305)871-1531
WALTER A. TILLIT Jr., P. E.
FLORIDA Lic. # 44167

ROLL-UP SHUTTER

SHUTTER GUARD
10601 OAK STREET N. E
St. PETERSBURG, FLORIDA 33716

REV. No	DESCRIPTION	DATE	REV. No	DESCRIPTION	DATE
1	-	-	3		
2			4		

SCALE -
DATE 9/9/96
DRAWING No 96 - 283
SHEET 10 OF 12

HEADER LOADING CHART

MAXIMUM NEGATIVE DESIGN PRESSURE RATING "W" (p. s. f.) AND CORRESPONDING MAXIMUM SPAN "L" FOR A GIVEN TYPE OF HEADER.

(USE NEGATIVE PRESSURE VALUES AS PER ASCE 7-88)

MAXIMUM DESIGN LOAD "W" (p.s.f)	TYPE 1 HEADER HEADER STANDARD		TYPE 1A HEADER 3 1/2" HEADER		TYPE 2 HEADER HEADER FOR 10" SIDEFRAME (BRITTANY)		TYPE 3 HEADER 7" HEADER	
	STORM BAR HEIGHT		STORM BAR HEIGHT		STORM BAR HEIGHT		STORM BAR HEIGHT	
	≤ 5'-0"	> 5' TO 8'	≤ 5'-0"	> 5' TO 8'	≤ 7'-0"	> 7' TO 10'	≤ 8'-0"	> 8' TO 12'
47.8	8'-3"	6'-6"	11'-4"	9'-8"	14'-2"	12'-5"	17'-0"	15'-4"
52.0	7'-11"	6'-3"	11'-1"	9'-3"	13'-10"	11'-11"	16'-8"	14'-9"
55.6	7'-7"	6'-0"	10'-11"	8'-11"	13'-8"	11'-6"	16'-5"	14'-4"
57.2	7'-6"	5'-11"	10'-10"	8'-10"	13'-6"	11'-4"	16'-3"	14'-2"
58.6	7'-5"	5'-10"	10'-9"	8'-9"	13'-5"	11'-3"	16'-2"	13'-11"
59.5	7'-4"	5'-10"	10'-9"	8'-8"	13'-4"	11'-2"	16'-1"	14'-7"
61.5	7'-3"	5'-9"	10'-8"	8'-6"	13'-1"	10'-11"	16'-0"	13'-7"
61.8	7'-3"	5'-9"	10'-7"	8'-6"	13'-0"	10'-11"	16'-0"	13'-5"
63.4	7'-2"	5'-8"	10'-7"	8'-5"	12'-11"	10'-9"	15'-10"	13'-5"
63.6	7'-2"	5'-8"	10'-7"	8'-4"	12'-11"	10'-9"	15'-10"	13'-4"
66.9	6'-11"	5'-6"	10'-4"	8'-2"	12'-6"	10'-6"	15'-8"	13'-0"
67.5	6'-11"	5'-6"	10'-3"	8'-1"	12'-6"	10'-6"	15'-7"	13'-0"
70.1	6'-10"	5'-4"	10'-1"	8'-0"	12'-3"	10'-3"	15'-6"	12'-9"
71.1	6'-9"	5'-4"	10'-0"	7'-11"	12'-2"	10'-2"	15'-5"	12'-8"
71.5	6'-9"	5'-4"	10'-0"	7'-11"	12'-2"	10'-2"	15'-5"	12'-7"
72.9	6'-8"	5'-3"	9'-11"	7'-10"	12'-0"	10'-0"	15'-4"	12'-6"
75.1	6'-7"	5'-2"	9'-9"	7'-8"	11'-10"	9'-11"	15'-0"	12'-4"
75.3	6'-7"	5'-2"	9'-9"	7'-8"	11'-10"	9'-10"	15'-0"	12'-4"
77.0	6'-6"	5'-1"	9'-8"	7'-7"	11'-8"	9'-9"	14'-11"	12'-2"
77.5	6'-6"	5'-1"	9'-7"	7'-7"	11'-8"	9'-9"	14'-10"	12'-1"
78.8	6'-5"	5'-0"	9'-6"	7'-6"	11'-7"	9'-8"	14'-9"	12'-0"
80.7	6'-4"	5'-0"	9'-5"	7'-5"	11'-5"	9'-7"	14'-7"	11'-11"
81.5	6'-4"	5'-0"	9'-4"	7'-5"	11'-4"	9'-6"	14'-6"	11'-10"
82.5	6'-3"	4'-11"	9'-4"	7'-4"	11'-4"	9'-6"	14'-4"	11'-9"
83.4	6'-3"	4'-11"	9'-3"	7'-4"	11'-3"	9'-5"	14'-4"	11'-8"
86.2	6'-1"	4'-10"	9'-1"	7'-2"	11'-0"	9'-3"	14'-1"	11'-6"
86.8	6'-1"	4'-10"	9'-1"	7'-2"	11'-0"	9'-2"	14'-0"	11'-5"
88.5	6'-0"	4'-9"	9'-0"	7'-1"	10'-11"	9'-2"	13'-11"	11'-4"
90.3	6'-0"	4'-9"	8'-11"	7'-0"	10'-10"	9'-0"	13'-9"	11'-3"

PRODUCT RENEWED
ACCEPTANCE No. 98-0113.04
EXPIRATION DATE FEBRUARY 19, 2001
By Manuel Perez
PRODUCT CONTROL DIVISION
BUILDING CODE COMPLIANCE OFFICE

MAXIMUM NEGATIVE DESIGN PRESSURE RATING "W" (p. s. f.) AND CORRESPONDING MAXIMUM ANCHOR SPACING (in.) SCHEDULE

MAXIMUM DESIGN LOAD "W" (p.s.f.)	TO CONCRETE WALL	TO MASONRY WALL
FROM 47.8 TO 90.3	8" O. C.	8" O. C.

PRODUCT RENEWED
ACCEPTANCE No. 00-1121.05
EXPIRATION DATE 02/19/2006
By Manuel Perez
PRODUCT CONTROL DIVISION
BUILDING CODE COMPLIANCE OFFICE

APPROVED AS COMPLYING WITH THE SOUTH FLORIDA BUILDING CODE
DATE OCTOBER 10 1996
BY Manuel Perez
PRODUCT CONTROL DIVISION
BUILDING CODE COMPLIANCE OFFICE
ACCEPTANCE NO. 96-0913.02

Walter A. Tillit
9/10/96

DADE COUNTY

TILLECO INC.
TILLIT TESTING & ENGINEERING COMPANY
8595 N.W. 36th. St., Ste. 217, VIRGINIA GARDENS, FL 33166
Phone : (305)871-1530 . Fax : (305)871-1531
WALTER A. TILLIT Jr., P. E.
FLORIDA Lic. # 44167

ROLL-UP SHUTTER

SHUTTER GUARD
10601 OAK STREET N. E.
ST. PETERSBURG, FLORIDA 33716

REV. No	DESCRIPTION	DATE	REV. No	DESCRIPTION	DATE
1	–	–	3		
2			4		

SCALE –
DATE 9/9/96
DRAWING No 96 – 283
SHEET 11 OF 12

MULLION LOADING CHART

MAXIMUM NEGATIVE DESIGN PRESSURE RATING "W" (p. s. f.) AND CORRESPONDING MAXIMUM SPAN "M" FOR A GIVEN TYPE OF MULLION AND MULLION SPACING. (USE NEGATIVE PRESSURE VALUES AS PER ASCE 7-88)

MAXIMUM DESIGN LOAD "W" (p.s.f.)	TYPE 1 MULLION 3" x 2" RECT. TUBE					TYPE 2 MULLION 3" x 4" H. DUTY POST					TYPE 3 MULLION 3" x 6" H. DUTY POST				
	MULLION SPACING					MULLION SPACING					MULLION SPACING				
	3' TOR LESS	> 3' TO 5'	> 5' TO 8'	> 8' TO 10'	>10' TO 12'	3' OR LESS	> 3' TO 5'	> 5' TO 8'	> 8' TO 10'	>10' TO 12'	3' OR LESS	> 3' TO 5'	> 5' TO 8'	> 8' TO 10'	>10' TO 12'
47.8	6'-9"	5'-8"	–	–	–	11'-4"	9'-7"	9'-4"	8'-8"	8'-2"	14'-10"	12'-6"	12'-4"	11'-5"	10'-9"
52.0	6'-6"	5'-6"	–	–	–	11'-0"	9'-3"	9'-1"	8'-5"	7'-11"	14'-5"	12'-2"	12'-0"	11'-1"	10'-5"
55.6	6'-4"	5'-5"	–	–	–	10'-9"	9'-0"	8'-11"	8'-3"	7'-10"	14'-2"	11'-11"	11'-8"	10'-10"	10'-3"
57.2	6'-4"	5'-4"	–	–	–	10'-8"	9'-0"	8'-10"	8'-2"	7'-8"	14'-0"	11'-10"	11'-7"	10'-9"	10'-1"
58.6	6'-4"	5'-3"	–	–	–	10'-7"	8'-11"	8'-9"	8'-1"	7'-8"	13'-11"	11'-9"	11'-6"	10'-8"	10'-0"
59.5	6'-3"	5'-3"	–	–	–	10'-6"	8'-10"	8'-8"	8'-0"	7'-7"	13'-10"	11'-8"	11'-5"	10'-7"	10'-0"
61.5	6'-2"	5'-2"	–	–	–	10'-5"	8'-9"	8'-7"	8'-0"	7'-6"	13'-8"	11'-6"	11'-4"	10'-6"	9'-11"
61.8	6'-2"	5'-2"	–	–	–	10'-4"	8'-9"	8'-7"	8'-0"	7'-6"	13'-8"	11'-6"	11'-3"	10'-6"	9'-10"
63.4	6'-2"	5'-2"	–	–	–	10'-3"	8'-8"	8'-7"	7'-11"	7'-5"	13'-6"	11'-5"	11'-2"	10'-5"	9'-9"
63.6	6'-1"	5'-2"	–	–	–	10'-3"	8'-8"	8'-6"	7'-11"	7'-5"	13'-6"	11'-5"	11'-2"	10'-5"	9'-9"
66.9	6'-0"	5'-1"	–	–	–	10'-1"	8'-6"	8'-4"	7'-9"	7'-4"	13'-3"	11'-2"	11'-0"	10'-2"	9'-7"
67.5	6'-0"	5'-0"	–	–	–	10'-0"	8'-5"	8'-4"	7'-9"	7'-3"	13'-3"	11'-2"	11'-0"	10'-2"	9'-7"
70.1	5'-11"	5'-0"	–	–	–	10'-0"	8'-5"	8'-3"	7'-8"	7'-2"	13'-1"	11'-0"	10'-10"	10'-1"	9'-5"
71.1	5'-10"	5'-0"	–	–	–	9'-11"	8'-4"	8'-2"	7'-7"	7'-2"	13'-0"	11'-0"	10'-9"	10'-0"	9'-5"
71.5	5'-10"	4'-11"	–	–	–	9'-11"	8'-4"	8'-2"	7'-7"	7'-2"	13'-0"	10'-11"	10'-9"	10'-0"	9'-5"
72.9	5'-10"	4'-11"	–	–	–	9'-10"	8'-4"	8'-2"	7'-7"	7'-1"	12'-11"	10'-11"	10'-8"	9'-11"	9'-4"
75.1	5'-10"	4'-10"	–	–	–	9'-9"	8'-2"	8'-0"	7'-6"	7'-0"	12'-9"	10'-9"	10'-7"	9'-10"	9'-3"
75.3	5'-9"	4'-10"	–	–	–	9'-9"	8'-2"	8'-0"	7'-6"	7'-0"	12'-9"	10'-9"	10'-7"	9'-10"	9'-3"
77.0	5'-9"	4'-10"	–	–	–	9'-9"	8'-2"	8'-0"	7'-5"	7'-0"	12'-8"	10'-8"	10'-6"	9'-9"	9'-2"
77.5	5'-9"	4'-10"	–	–	–	9'-8"	8'-2"	8'-0"	7'-5"	–	12'-8"	10'-8"	10'-6"	9'-9"	9'-2"
78.8	5'-8"	4'-10"	–	–	–	9'-7"	8'-1"	7'-11"	7'-4"	–	12'-7"	10'-7"	10'-5"	9'-8"	9'-1"
80.7	5'-8"	4'-9"	–	–	–	9'-6"	8'-0"	7'-10"	7'-4"	–	12'-6"	10'-6"	10'-4"	9'-7"	9'-0"
81.5	5'-7"	4'-9"	–	–	–	9'-6"	8'-0"	7'-10"	7'-3"	–	12'-5"	10'-6"	10'-4"	9'-7"	9'-0"
82.5	5'-7"	4'-9"	–	–	–	9'-5"	7'-11"	7'-9"	7'-3"	–	12'-5"	10'-5"	10'-3"	9'-6"	8'-11"
83.4	5'-6"	4'-9"	–	–	–	9'-5"	7'-11"	7'-8"	7'-3"	–	12'-4"	10'-5"	10'-3"	9'-6"	8'-11"
86.2	5'-6"	4'-8"	–	–	–	9'-3"	7'-10"	7'-8"	7'-2"	–	12'-2"	10'-4"	10'-1"	9'-5"	8'-10"
86.8	5'-6"	4'-7"	–	–	–	9'-3"	7'-10"	7'-8"	7'-2"	–	12'-2"	10'-3"	10'-1"	9'-4"	8'-10"
88.5	5'-6"	4'-7"	–	–	–	9'-3"	7'-10"	7'-7"	7'-1"	–	12'-1"	10'-2"	10'-0"	9'-4"	8'-9"
90.3	5'-5"	4'-7"	–	–	–	9'-2"	7'-9"	7'-7"	7'-0"	–	12'-0"	10'-2"	9'-11"	9'-3"	8'-8"

PRODUCT RENEWED
ACCEPTANCE No. 00-1121.05
EXPIRATION DATE 02/19/2006
By Manuel Perez
PRODUCT CONTROL DIVISION
BUILDING CODE COMPLIANCE OFFICE

PRODUCT RENEWED
ACCEPTANCE No. 98-0113.04
EXPIRATION DATE FEBRUARY 19, 2001
By Manuel Perez
PRODUCT CONTROL DIVISION
BUILDING CODE COMPLIANCE OFFICE

APPROVED AS COMPLYING WITH THE SOUTH FLORIDA BUILDING CODE
DATE OCTOBER 16 1996
BY Manuel Perez
PRODUCT CONTROL DIVISION
BUILDING CODE COMPLIANCE OFFICE
ACCEPTANCE NO. 96-0913.02

DADE COUNTY

Walter A. Tillit
9/10/96

TILTECO INC.
TILLIT TESTING & ENGINEERING COMPANY
8595 N.W. 36th. St., Ste. 217, VIRGINIA GARDENS, Fl. 33166
Phone : (305)871-1530 . Fax : (305)871-1531
WALTER A. TILLIT Jr., P. E.
FLORIDA Lic. # 44167

ROLL-UP SHUTTER

SHUTTER GUARD
10601 OAK STREET N. E.
St. PETERSBURG, FLORIDA 33716

REV. No	DESCRIPTION	DATE	REV. No	DESCRIPTION	DATE
1	–	–	3		
2			4		

– SCALE
9/9/96 DATE
96 – 283 DRAWING No
SHEET 12 OF 12