MIAMI-DADE COUNTY, FLORIDA
METRO-DADE FLAGLER BUILDING

BUILDING CODE COMPLIANCE OFFICE
METRO-DADE FLAGLER BUILDING
140 WEST FLAGLER STREET, SUITE 1603
MIAMI, FLORIDA 33130-1563
(305) 375-2901 FAX (305) 375-2908

CONTRACTOR LICENSING SECTION
(305) 375-2527 FAX (305) 375-2558

CONTRACTOR ENFORCEMENT DIVISION
(305) 375-2966 FAX (305) 375-2908

PRODUCT CONTROL DIVISION
(305) 375-2902 FAX (305) 372-6339

PRODUCT CONTROL NOTICE OF ACCEPTANCE

Sto Corporation
6175 Riverside Drive, S.W.
Atlanta ,GA 30331

Your application for Notice of Acceptance (NOA) of:
Sto HI-FR Ply Exterior Insulation and Finish System
under Chapter 8 of the Code of Miami-Dade County governing the use of Alternate Materials and Types of Construction, and completely described herein, has been recommended for acceptance by the Miami-Dade County Building Code Compliance Office (BCCO) under the conditions specified herein.

This NOA shall not be valid after the expiration date stated below. BCCO reserves the right to secure this product or material at any time from a jobsite or manufacturer's plant for quality control testing. If this product or material fails to perform in the approved manner, BCCO may revoke, modify, or suspend the use of such product or material immediately. BCCO reserves the right to revoke this approval, if it is determined by BCCO that this product or material fails to meet the requirements of the South Florida Building Code.

The expense of such testing will be incurred by the manufacturer.

ACCEPTANCE NO.: 00-1206.03
EXPIRES: 09/07/2003

Raul Rodriguez
Chief Product Control Division

THIS IS THE COVERSHEET, SEE ADDITIONAL PAGES FOR SPECIFIC AND GENERAL CONDITIONS
BUILDING CODE & PRODUCT REVIEW COMMITTEE

This application for Product Approval has been reviewed by the BCCO and approved by the Building Code and Product Review Committee to be used in Miami-Dade County, Florida under the conditions set forth above.

Francisco J. Quintana, R.A.
Director
Miami-Dade County
Building Code Compliance Office

APPROVED: 02/22/2001

Sto Corporation.

ACCEPTANCE NO: 00-1206.03

APPROVED: FEB 2 2 2001

EXPIRES: 09/07/2003

NOTICE OF ACCEPTANCE: SPECIFIC CONDITIONS

1. SCOPE

1.1 This revises the Notice of Acceptance No. 00-0609.09 that was issued on 09/07/2000. It approves an Exterior Insulation and Finish System as described in Section 2 of this Notice of Acceptance (N.O.A.) designed to comply with the South Florida Building Code 1994 Edition for Miami-Dade County (SFBC). For the location where the pressure requirements, as determined by the SFBC Chapter 23 do not exceed the design pressure rating values indicated in the approved drawing.

2. PRODUCT DESCRIPTION

2.1 **The Sto Exterior Insulation and Finish System** and its components shall be constructed in strict compliance with the following documents: Drawing No. Sto HI-FRPly, titled "Sto HI-FRPly EIFS Fire Treated Plywood System for Large Missile Impact Resistance", Sheets 1 through 3 of 3, prepared by Sto Corporation. dated 11/01//2000, with no revisions. They bear the Miami-Dade County Product Control Approval stamp with the Notice of Acceptance number and approval date by the Miami-Dade County Product Control Division. These documents shall hereinafter be referred to as the Approved Drawing.

3. LIMITATIONS

3.1 This system is not to be used on horizontal surfaces exposed to weather except as a soffit, it is intended to be used on wall systems only.

4. INSTALLATION

4.1 The Sto HI-FRPly EIFS and its components shall be installed in strict compliance with the approved drawing.

4.2 The installation of this product does not require Hurricane Protection System.

5. LABELING

5.1 Each component shall bear a permanent label with the manufacturer's logo, city, state and the following statement "Miami-Dade County Product Control Approved".

6. BUILDING PERMIT REQUIREMENTS

6.1 Application for Building Permit shall be accompanied by copies of the following:

- **6.1.1** This Notice of Acceptance.
- **6.1.2** Duplicate copies of the approved drawings, as identified in Section 2 of this N.O.A.
- **6.1.3** Any other document required by the Building Official or the SFBC in order to properly evaluate the installation of this system.

Candido Font PE, Senior Product Control Examiner
Product Control Division

Sto Corporation.

ACCEPTANCE NO.: 00-1206.03

APPROVED: FEB 2 2 2001

EXPIRES: 09/07/2003

NOTICE OF ACCEPTANCE STANDARD CONDITIONS

1. Renewal of this Acceptance (approval) shall be considered after a renewal application has been filed and the original submitted documentation, including test supporting data, engineering documents, are no older than eight (8) years.

2. Any and all approved products shall be permanently labeled with the manufacturer's name, city, state, and the following statement: "Miami-Dade County Product Control Approved", or as specifically stated in the specific conditions of this Acceptance.

3. Renewals of Acceptance will not be considered if:
   a) There has been a change in the South Florida Building Code affecting the evaluation of this product and the product is not in compliance with the code changes;
   b) The product is no longer the same product (identical) as the one originally approved;
   c) If the Acceptance holder has not complied with all the requirements of this acceptance, including the correct installation of the product;
   d) The engineer who originally prepared, signed and sealed the required documentation initially submitted is no longer practicing the engineering profession.

4. Any revision or change in the materials, use, and/or manufacture of the product or process shall automatically be cause for termination of this Acceptance, unless prior written approval has been requested (through the filing of a revision application with appropriate fee) and granted by this office.

5. Any of the following shall also be grounds for removal of this Acceptance:
   a) Unsatisfactory performance of this product or process.
   b) Misuse of this Acceptance as an endorsement of any product, for sales, advertising or any other purpose.

6. The Notice of Acceptance number preceded by the words Miami-Dade County, Florida, and followed by the expiration date may be displayed in advertising literature. If any portion of the Notice of Acceptance is displayed, then it shall be done in its entirety.
7. A copy of this Acceptance as well as approved drawings and other documents, where it applies, shall be provided to the user by the manufacturer or its distributors and shall be available for inspection at the job site at all time. The engineer need not reseal the copies.

8. Failure to comply with any section of this Acceptance shall be cause for termination and removal of Acceptance.

9. This Notice of Acceptance consists of pages 1, 2 and this last page 3.

Candido Font PE, Senior Product Control Examiner
Product Control Division

END OF THIS ACCEPTANCE

Sto Corporation.

ACCEPTANCE NO: 00-1206.03

APPROVED: FEB 2 2 2001

EXPIRES: 09/07/2003

NOTICE OF ACCEPTANCE: EVIDENCE SUBMITTED
(For File ONLY. Not part of NOA)

A DRAWING

1. Drawing prepared by Sto Corporation, titled "Sto HI-FRPly EIFS Fire Treated Plywood System for Large Missile Impact Resistance", drawing No Sto HI-FRPly, sheets 1 through 3 of 3, dated 11/01/2000, with no revisions, signed and sealed by C. R. Shiver, PE.

B TEST

1 Test report on Cyclic Load Test per PA 203 and Uniform Static Air Load Test per PA 202 on "Sto Rwall Class PB EIF, Fire Treated Plywood System for Large Missile Impact Resistance", prepared by Certified Testing Laboratories, report # CTLA 470W, dated 02/07/00, signed and sealed by R. Patel, PE.

C CALCULATIONS.

Anchorage Calculations by Cerny & Ivey Engineers, Inc., Appendix B, 52 sheets, signed and sealed by A. C. Ivey, PE.

D MATERIAL CERTIFICATION

Product Control Notice of Acceptance No. 98-0904.04 issued to Apache Products Company on 11/26/98, expiring on 01/11/2002.

E STATEMENTS.

1 Code compliance letter issued by Cerny & Ivey Engineers, Inc. on 05/19/2000 signed and sealed by A. C. Ivey, PE.

2 No change letter issued by Sto Corporation, on 01/31/2001, signed by T. E. Remmele

Candido Font PE, Senior Product Control Examiner
Product Control Division

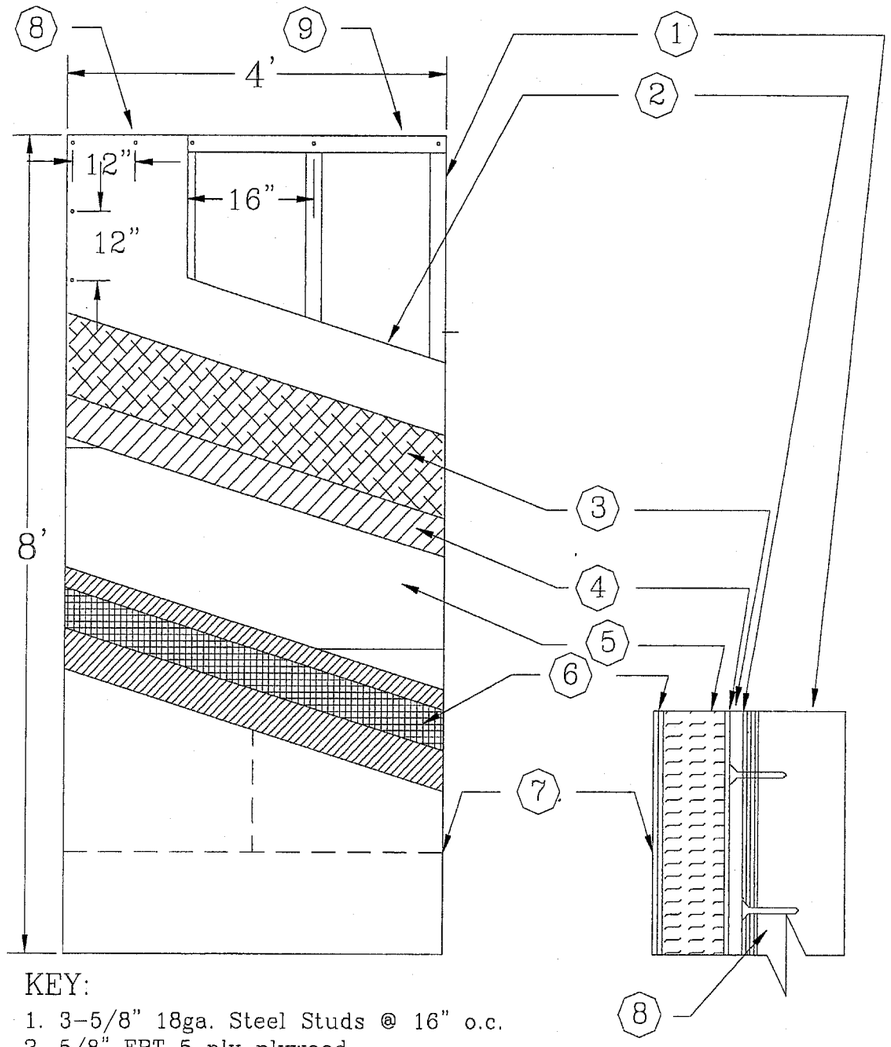

KEY:

1. 3-5/8" 18ga. Steel Studs @ 16" o.c.
2. 5/8" FRT 5 ply plywood
3. 1/2" Exterior Grade Gypsum Sheathing
4. Sto Primer/Adhesive-B (No. 101)
5. EPS Board @ 3/4" Thick & 1 PCF
6. Sto Primer/Adhesive-B with Sto Mesh (No. 920) Embedded
7. Sto Textured Finish (No. 310, 306, and 307)
8. Fasteners: 1-1/2" x #8 drywall screws @ 12" oc field and perimeter to attach plywood. 1" x #8 drywall screws @ 12" oc field and perimeter to attach gypsum sheathing
9. U Channel on head & sill secured to vertical studs with 1/2" SMS inboard & outboard.

DESCRIPTION

1.1 Substrates approved with the system

1.1.1. Minimum 3-5/8"" x 1-5/8" x 18 ga. Steel studs @ 16" o.c.- 5/8" Fire Resistance Treated 5 ply plywood fastened with 1-1/2" x #8 drywall screws @ 12" o.c. field and perimeter over steel studs. 1/2" thick exterior grade gypsum sheathing (ASTM C-79) with #8 x 1" drywall screws @ 12" o.c. field and perimeter.

1.1.2. Sto insulation (Apache) EPS Expanded Polystyrene insulation minimum 3/4" thick with a density of 1PCF as approved by Dade County NOA# 98-0904.04

1.1.3. Sto Primer/Adhesive -B (No. 101) is a polymer modified cement based material used as an adhesive and base coat in Sto systems

1.1.4. Sto Mesh (No. 920) a glass fiber fabric used for impact resistance of the Sto systems

1.1.5. Sto textured finishes (No. 310, 306,and 307) are ready mixed acrylic-based exterior or interior textured finishes, used as decoration and protection with the Sto systems. Three (3) are available: Fine Sand, Medium Sand, and Swirl

1.2 Application

1.2.1. The exposed gypsum surface is cleaned to remove any bond inhibiting particles from the surface of the gypsum.

1.2.2. The Sto Primer /Adhesive-B is mixed with 7-9 quarts of water using a clean rust free high speed electric drill and paddle. the mixture is allowed to set for approximately 5 minutes and then remixed to a uniform consistancy. The mixture is applied to the back of the Sto (Apache) insulation board using a 1/2" x 1/2" U-notched trowel. Uniform ribbons of adhesive are formed on the Sto (Apache) insulation board parellel to the long dimension of the board.

1.2.3. The Sto (Apache) insulation board minimum 3/4" thick is applied to the gypsum surface horizontally with staggered joints. Uniform pressure is applied to the insulation board to ensure proper adhesion to the gypsum surface. Once the entire surface of the gypsum is covered with the insulation board it is left overnight to cure.

1.2.4. The Sto Primer /Adhesive-B is mixed with 7-9 quarts of water using a clean rust free high speed electric drill and paddle. The mixture is allowed to set for approximately 5 minutes and then remixed to a uniform consistancy. A 1/8" thick layer is applied to the exposed surface of the STO (Apache) insulation board using a stainless steel trowel.

1.2.5. Sto Mesh is embedded in the wet Primer/Adhesive-B by troweling from the center to the edgesof the mesh and the excess is removed. This process is repeated until the entire exposed area of the insulation board is covered with mesh. Once covered, it is allowed to dry for a minimum of 12 hours.

1.2.6. Once the mesh reinforcing coats are dry and cured, a minimum 1/16" coat of Sto textured finish is applied to the entire surface.

GENERAL NOTES:

1) This system has been designed in accordance with the South Florida Building Code 1994 Edition and its latest supplements.
2) This system has been tested in accordance with the Dade County Protocol PA-202 and PA-203 Structural and Cyclic Testing.
3) This System shall be applied by a licensed plastering contractor following the recommendations of Sto Corp, this notice of acceptance and the applicable sections of the South Florida Building Code.
4) The engineer and/or architect of record for each project using this system shall size all stud framing to ensure conformance with stud deflection and stress limitations as required by governing codes and this document.
5) Insulation boards shall be placed in a running bond pattern.
6) All studs used with this system shall be completely sheathed at the interior flange or bridged at maximum every 5 ft. of stud length or as specified by stud manufacturer.
7) All Steel studs shall be structural with 1-5/8" min. flange width and have minimum yield strength of 33000 PSI.
8) Details on page No. 2 and 3 of 3 are typical and show intent to prevent water infiltration into and behind the system. Alternate details and specific conditions not covered by the typical details are the responsibility of the licensed design professional in consultation with Sto Corp.

APPROVED AS COMPLYING WITH THE SOUTH FLORIDA BUILDING CODE
DATE 02-22-01
BY
PRODUCT CONTROL DIVISION
BUILDING CODE COMPLIANCE OFFICE
ACCEPTANCE NO. 00-1206.03

Design Pressure Rating
+70/-70 PSF
Installed over
Impact Resistant Substrate

CERNY & IVEY ENGINEERS, INC.
CONSULTING ENGINEERS TESTING LABORATORY
5650 PEACHTREE PARKWAY, NORCROSS, GA 30092
(770)-449-6938 • FAX (770)-368-1140

Sto Corp.
3800 Camp Creek Parkway
Building 1400, Suite 120
Atlanta, Ga. 30331

Sto HI-FRPly EIFS
Fire Treated Plywood System
for
Large Missile Impact Resistance
Drawing no. Sto HI-FRPly
Page No. 1 of 3
Date: 11/01/2000
Not to Scale

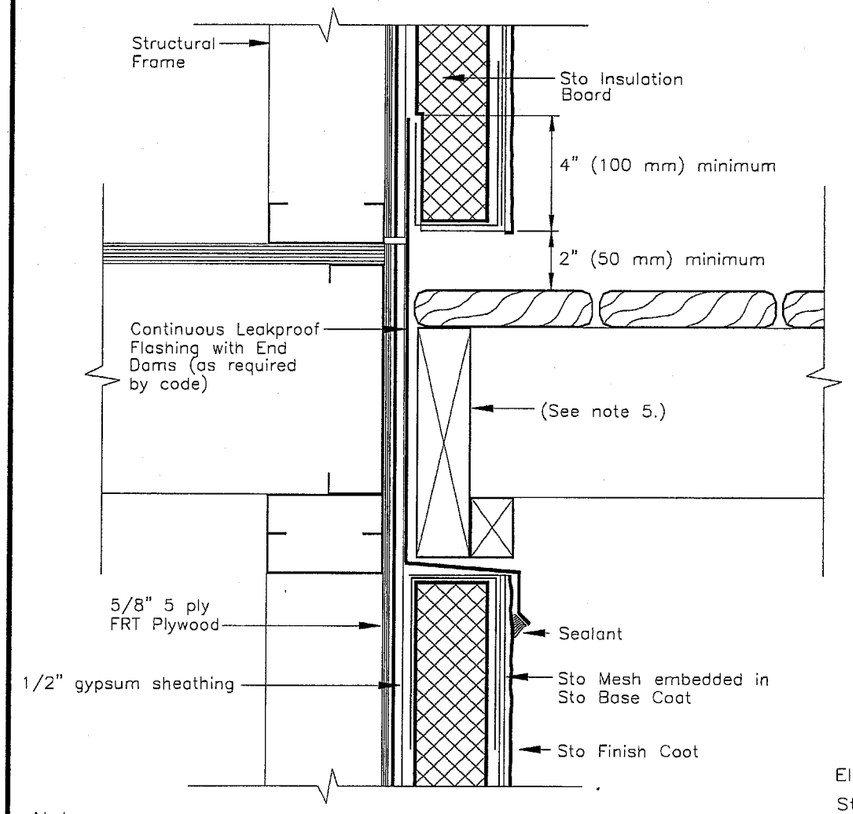

Notes:

1. Gap wood sheathing edge and end joints in accordance with APA (American Plywood Association) recommendations.
2. Seal penetrations through flashing where attached to framing.
3. Distance of EIFS to deck varies with climate. Allow sufficient distance to prevent snow/ice and puddling water against system.
4. Provide end dams where flashings terminate at ends of deck.
5. Pressure treated wood (space from flashing or rout backside to provide drainage).

TERMINATION AT DECK

N.T.S.

Notes:

1. Provide minimum 3/4" (19 mm) sealant joint width.

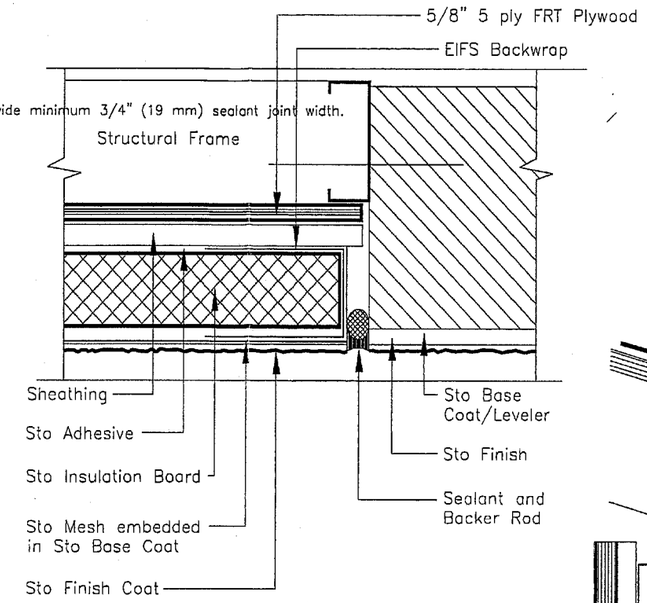

CONSTRUCTION JOINT

N.T.S.

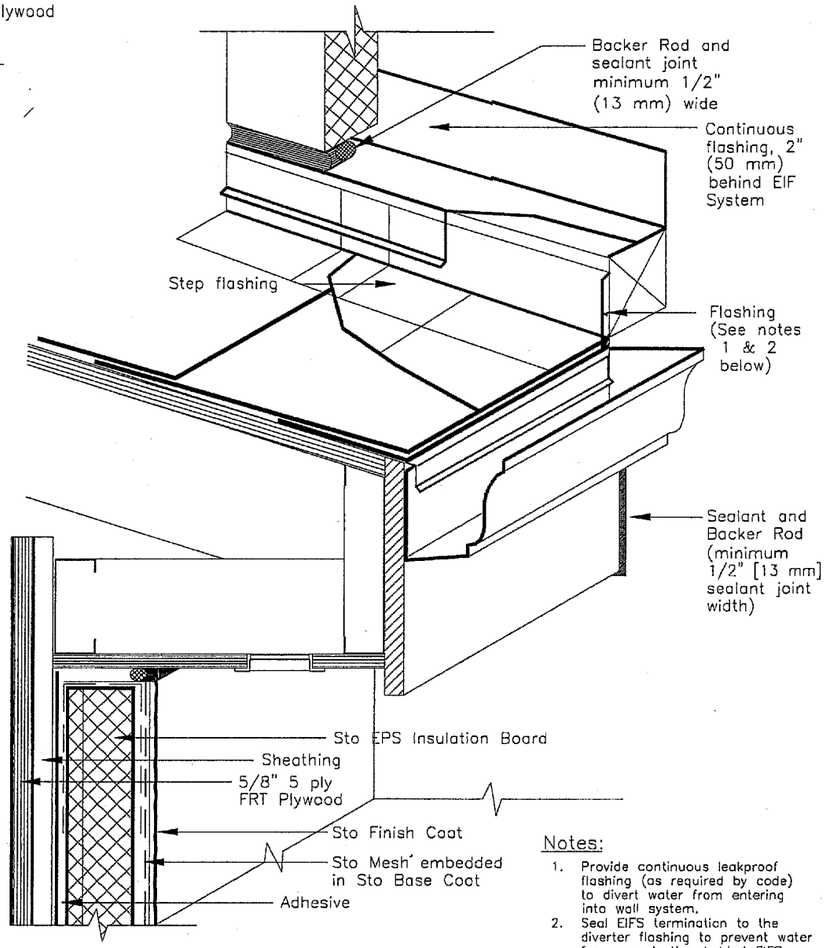

Notes:

1. Provide continuous leakproof flashing (as required by code) to divert water from entering into wall system.
2. Seal EIFS termination to the diverter flashing to prevent water from penetrating behind EIFS.

OVERHANG

N.T.S.

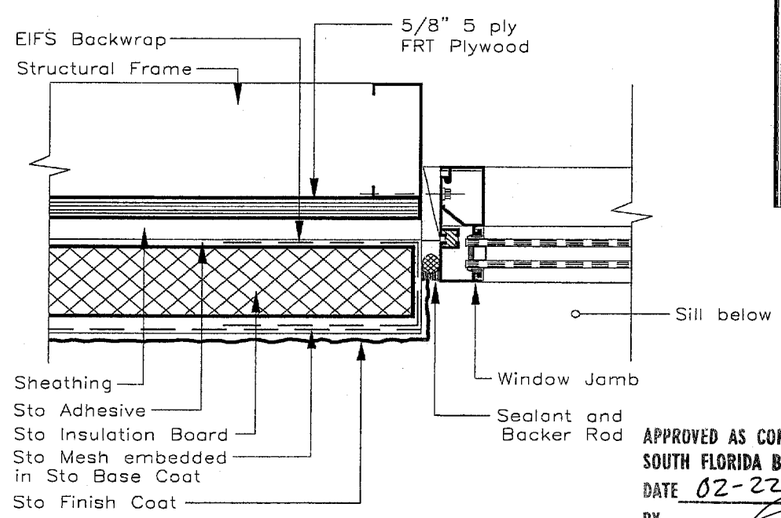

Notes:

1. Provide minimum 3/4" (19 mm) depth from back of insulation board to face of window frame for sufficient depth to install sealant.
2. Provide minimum 1/2" (13 mm) sealant joint width.

WINDOW JAMB

N.T.S.

TYPICAL DETAILS

APPROVED AS COMPLYING WITH THE SOUTH FLORIDA BUILDING CODE
DATE 02-22-01
BY
PRODUCT CONTROL DIVISION
BUILDING CODE COMPLIANCE OFFICE
ACCEPTANCE NO. 00-1206.03

CERNY & IVEY ENGINEERS, INC.
CONSULTING ENGINEERS TESTING LABORATORY
5550 PEACHTREE PARKWAY, NORCROSS, GA 30092
(770)-449-3938 • FAX (770)-368-1140

Sto Corp.
3800 Camp Creek Parkway
Building 1400, Suite 120
Atlanta, Ga. 30331

Sto HI-FRPly EIFS
Fire Treated Plywood System
for
Large Missile Impact Resistance
Drawing no. Sto HI-FRPly
Page No. 2 of 3
Date: 11/01/2000
Not to Scale

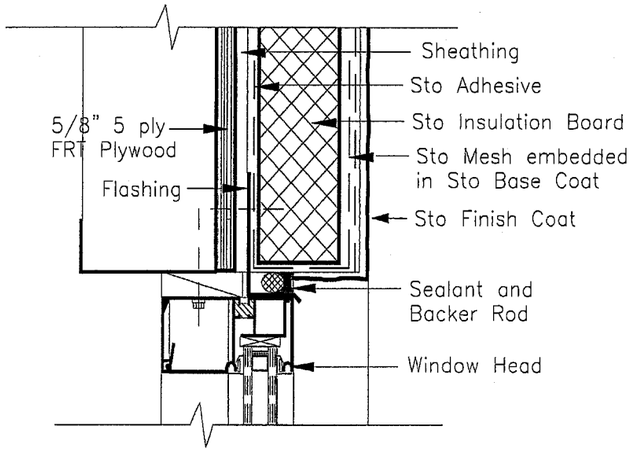

Notes:

1. Provide minimum 3/4" (19 mm) depth from back of insulation board to face of window frame for sufficient depth to install sealant.
2. Provide minimum 1/2" (13 mm) sealant joint width.
3. Provide flashing as secondary barrier at sealant joint when called for by design professional.

WINDOW HEAD
N.T.S.

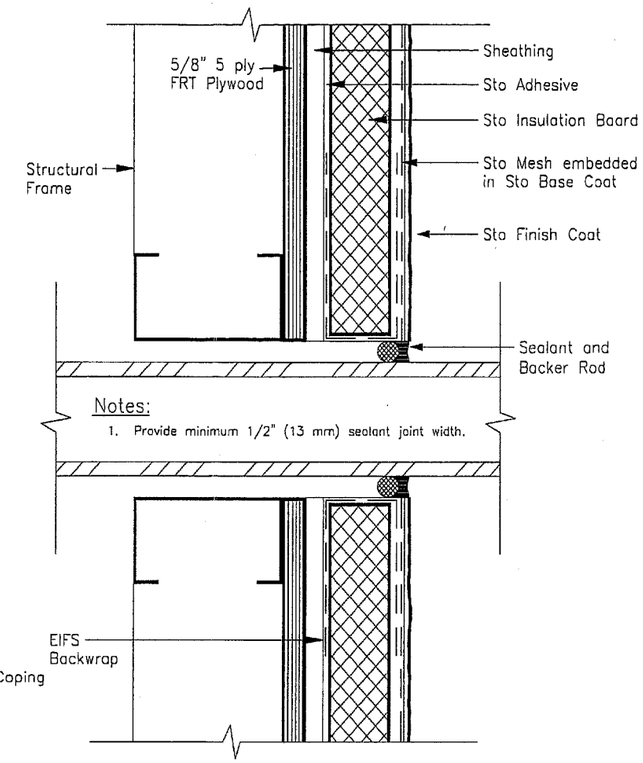

Notes:

1. Provide minimum 1/2" (13 mm) sealant joint width.

TERMINATION AT PENETRATION
N.T.S.

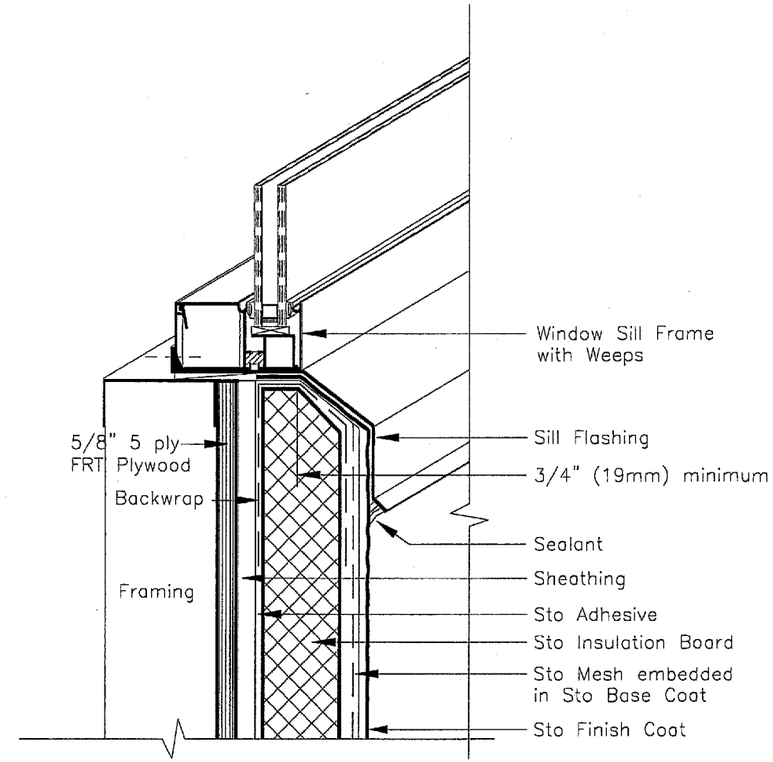

Notes:

1. Protect exposed EIF System at sill from weather damage during construction until permanently protected with sill and sealant.
2. Pan up flashing @ jamb.

WINDOW SILL
N.T.S.

APPROVED AS COMPLYING WITH THE
SOUTH FLORIDA BUILDING CODE
DATE 02-22-01
BY
PRODUCT CONTROL DIVISION
BUILDING CODE COMPLIANCE OFFICE
ACCEPTANCE NO. 00-1206.03

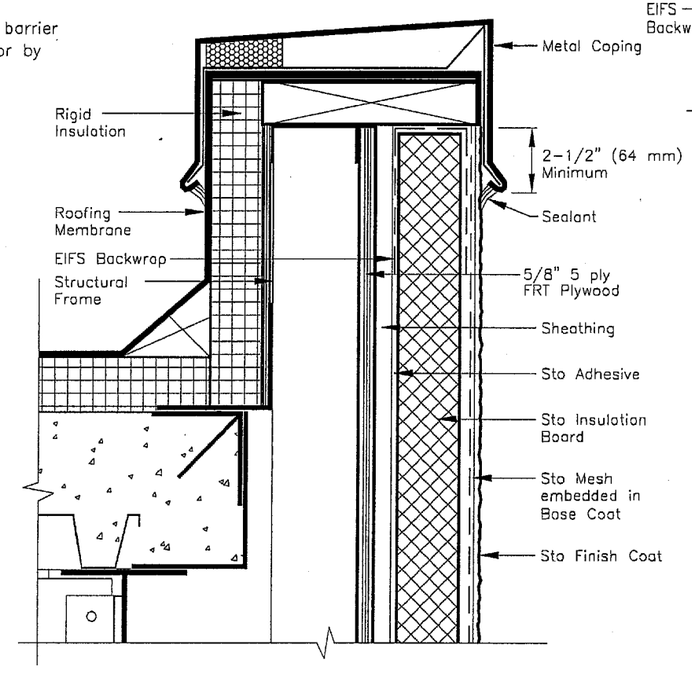

1. Protect exposed EIF System at parapet from weather damage during construction until permanently protected with coping.
2. Extend dimension of coping overlap for multi-story construction/coastal regions to prevent wind driven rain from entering behind system.

PARAPET
N.T.S.

TYPICAL DETAILS

GERNY & IVEY ENGINEERS, INC.
CONSULTING ENGINEERS TESTING LABORATORY
3550 PEACHTREE PARKWAY, NORCROSS, GA 30092
(770)-448-2026 • FAX (770)-368-1142

Sto Corp.
3800 Camp Creek Parkway
Building 1400, Suite 120
Atlanta, Ga. 30331
Sto HI-FRPly EIFS
Fire Treated Plywood System
for
Large Missile Impact Resistance
Drawing no. Sto HI-FRPly
Page No. 3 of 3
Date: 11/01/2000
Not to Scale